HEAT TREATMENT & FINAL FINISH

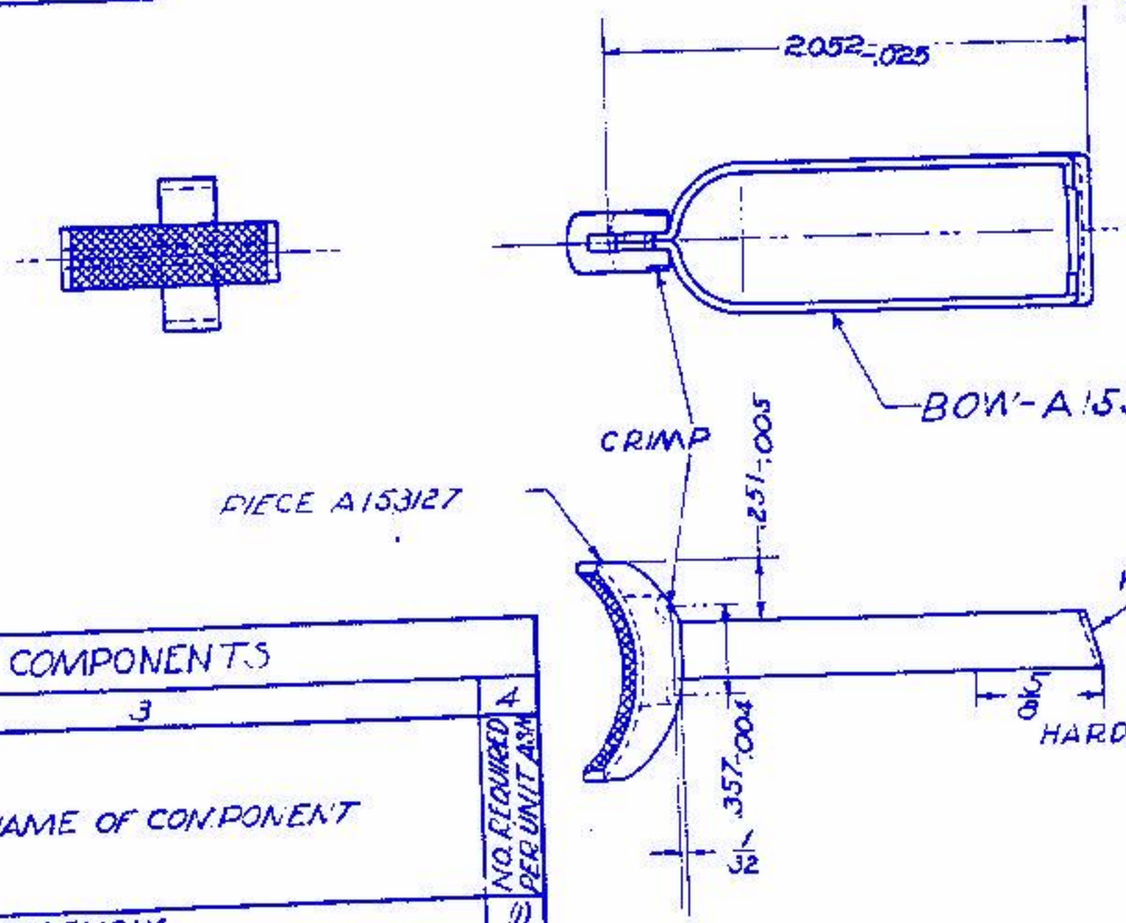

PHYSICAL PROPERTIES	
Y.P.	
T.S.	
EL.2	
RED.	
BR.	
ROCK.	

SEPT. 16, 1942

REVISIONS

1	3-1-43			
2	9-28-43			

DRG. PERTAINS TO

42-8	45AP-M11A1

LIST OF COMPONENTS

LINE NUMBER	2 DRAWING NUMBER OR PIECE MARK	3 NAME OF COMPONENT	4 NO. REQUIRED PER UNIT ASM.
1	B147780	TRIGGER ASSEMBLY	
2		COMPOSED OF:	
3	A153126	1-BOW, TRIGGER	*
4	A153127	1-PIECE, FINGER	*
5			

*WILL NOT BE ISSUED FOR FIELD MAINTENANCE EXCEPT AS COMPONENTS OF AUTHORIZED ASSEMBLIES

0 1 2 INCHES

TRIGGER ASSEMBLY (B)147780-2

FOR STANDARD DESIGN SEE B8604

SPRINGFIELD ARMORY

B147780

DFTSMAN	TRACER	L'DG. DFTSMAN
E.C.P.		E.C.P.
CHECKED		CHIEF DFTSMAN
JFOB		

SUBMITTED:
S. Ambrose
ORD. ENG., ORD. DEPT.

APPROVED BY ORDER OF THE CHIEF OF ORDNANCE:
[illegible]
CHIEF, ORD. DEPT.

ORDNANCE DEPT., U.S.A.

HEAT TREATMENT & FINAL FINISH

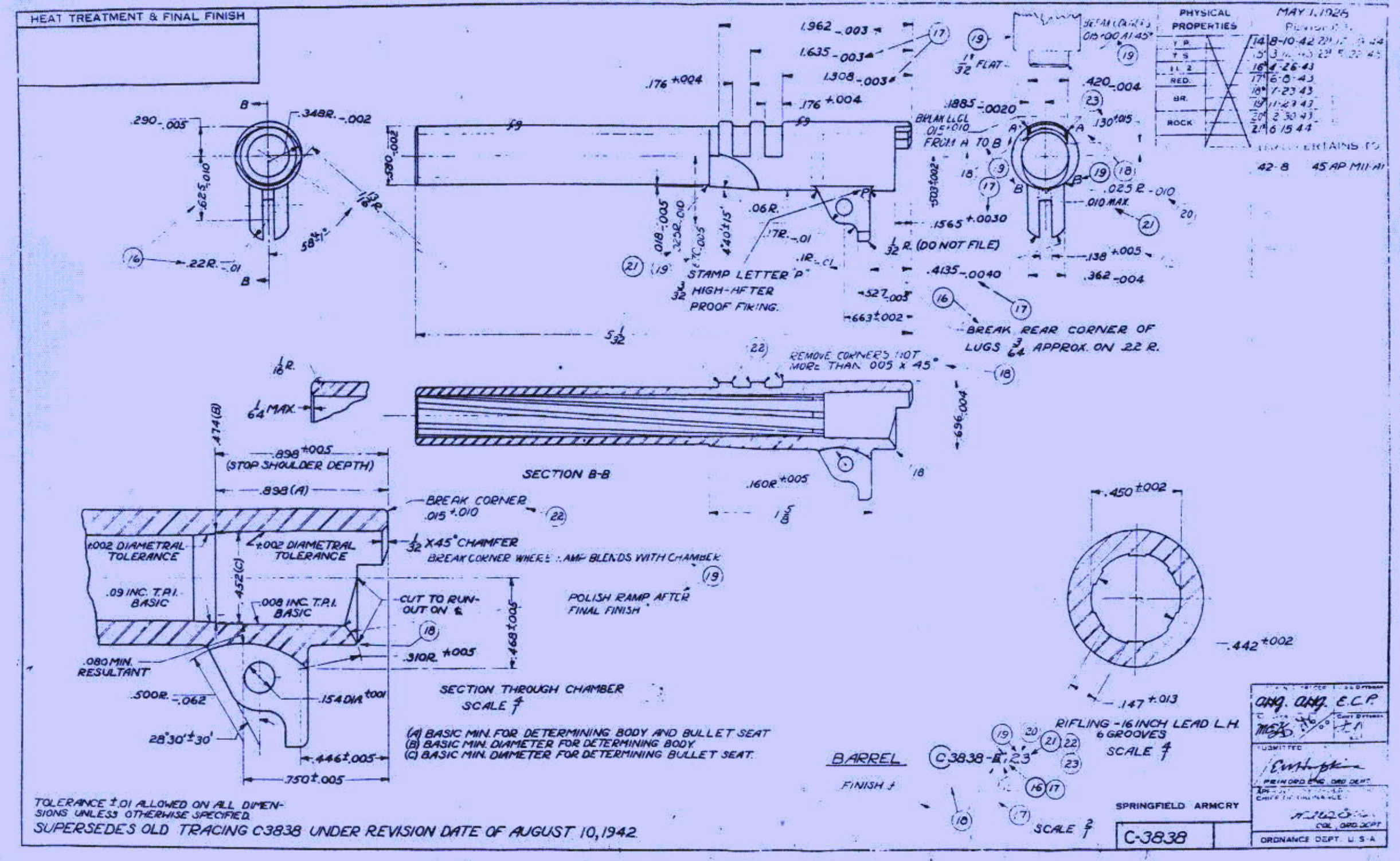

TOLERANCE ±.01 ALLOWED ON ALL DIMENSIONS UNLESS OTHERWISE SPECIFIED.

SUPERSEDES OLD TRACING C3838 UNDER REVISION DATE OF AUGUST 10, 1942.

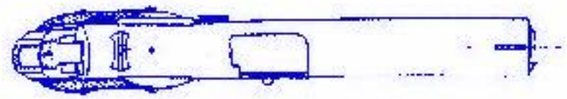

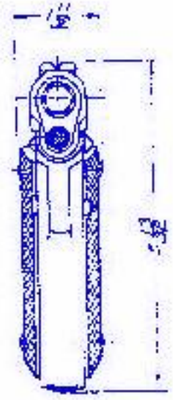

PISTOL, AUTOMATIC
CAL. .45 M1911A1
EXTERIOR VIEWS

MAY 1, 1928	C 333	DIVISION	DRAWING	FILE
REVISIONS	42	8	29	

ORDNANCE DEPT. U.S.A.

SUPERSEDES OLD TRACING 42-8-29
UNDER REVISION DATE OF JAN 13, 1936

0 1 2 3 4 5 6 7 8 9 10 11 INCHES

HEAT TREATMENT & FINAL FINISH

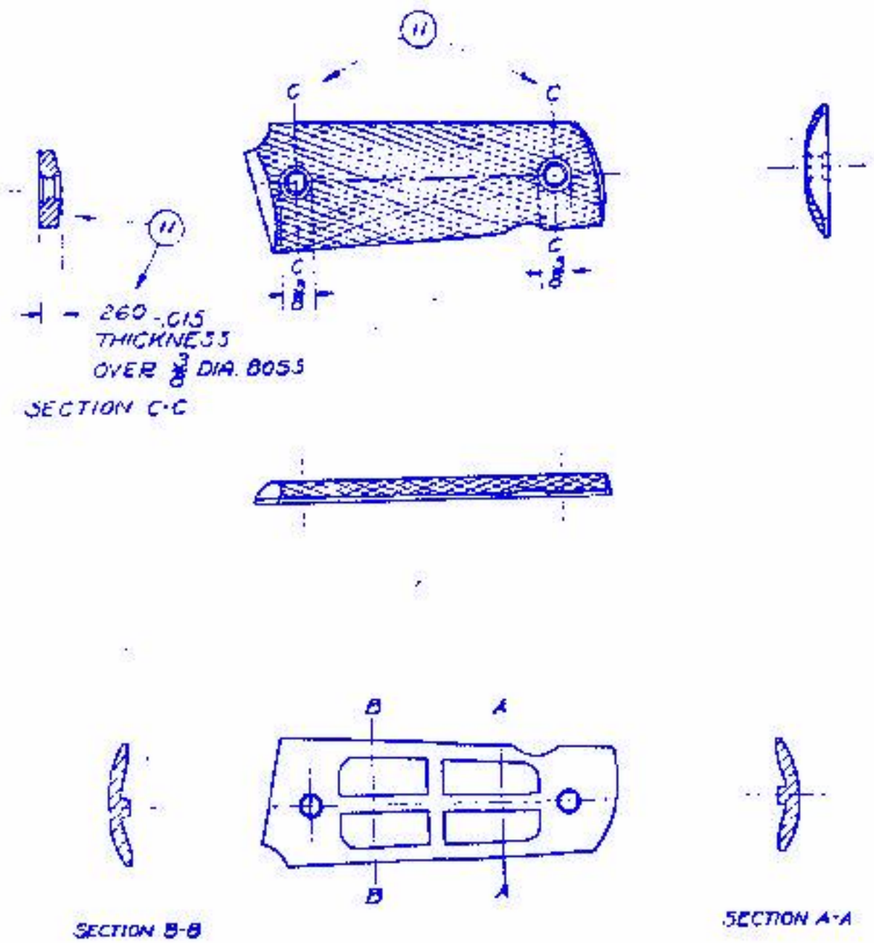

NOTES: — FOR DIMENSIONS SEE DRG. OF WOOD STOCK.
INSIDE RECESSES MAY VARY SUBJECT TO APPROVAL OF CONTRACTING OFFICER.

STOCK, RIGHT HAND, PLASTIC (C)64062-11 (11)

TOLERANCE ±.01 ALLOWED ON ALL DIMENSIONS UNLESS OTHERWISE SPECIFIED

SUPERSEDES OLD TRACING C64062 UNDER REVISION DATE OF SEPT. 5, 1942

PHYSICAL PROPERTIES	JAN. 15, 1936 REVISIONS
Y. P.	10 9-5-42
T. S.	11 9-6-44
EL. 2	
RFD.	
BR.	
ROCK.	

DRG PERTAINS TO

42-B	45 AP M11 A1

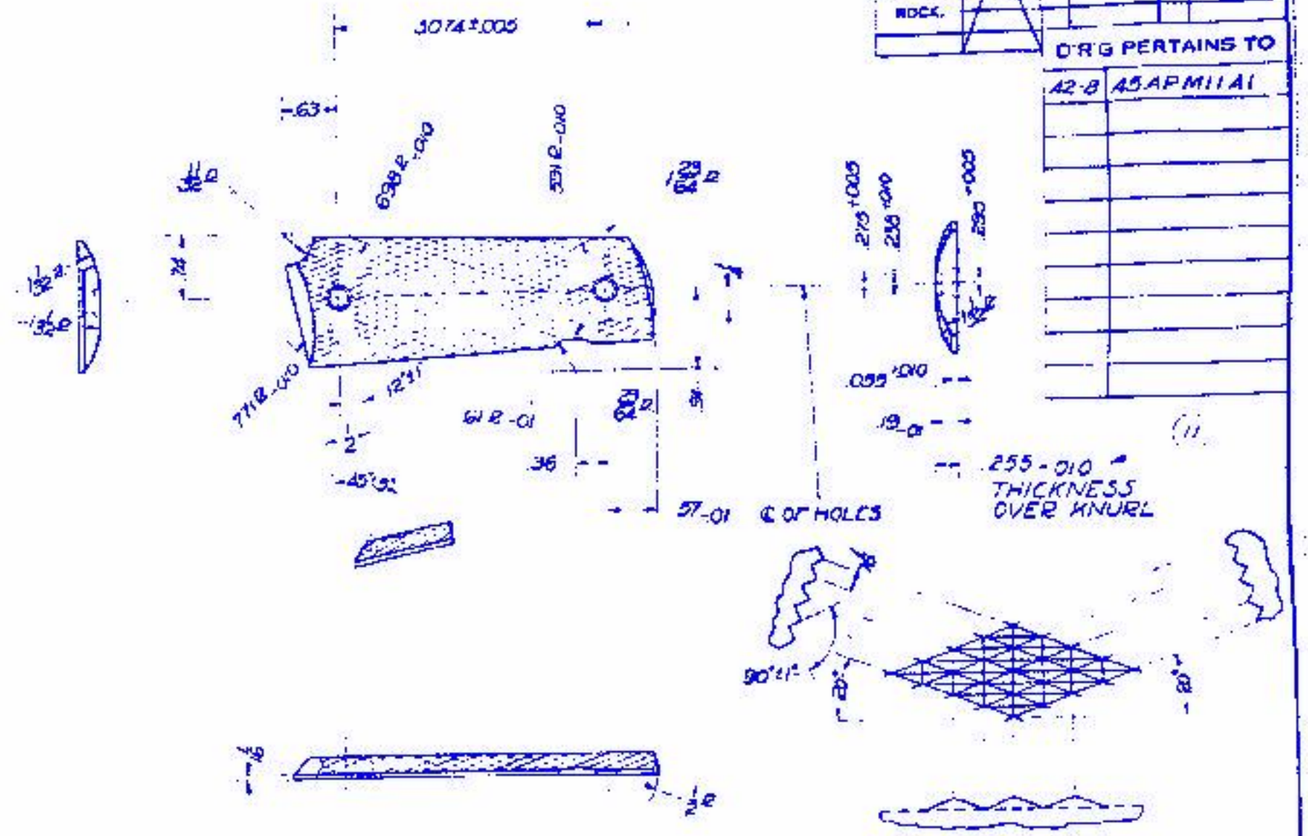

ENLARGED VIEW OF DIAMOND CHECK
SCALE 4/1

STOCK, RIGHT HAND, WOOD (C)64062-11 (11)

OPTIONAL
CHECKING MAY BE HOT PRESSED
SCALE 4/1

SPRINGFIELD ARMORY

SCALE 1/1

C-64062

DESIGNER	TRACER	L.O.D. DESIGNER
J.M.S.	J.M.D.	E.C.P.
CHECKER		
9-7-43		

SUBMITTED:
ORD. ENG. ORD. DEPT.

APPROVED BY ORDER OF THE CHIEF OF ORDNANCE:
COL. ORD. DEPT.

ORDNANCE DEPT. U. S. A.

HEAT TREATMENT & FINAL FINISH
PHYSICAL PROPERTIES
REVISIONS
RED
RR.
ROCK
SUBMITTED
SPRINGFIELD ARMORY
ORDNANCE DEPT. U.S.A.
TOLERANCE ±.01 ALLOWED ON ALL DIMENSIONS UNLESS OTHERWISE SPECIFIED
SUPERSEDES OLD TRACING C64062 UNDER REVISION DATE OF SEPT. 5, 1942

HEAT TREATMENT & FINAL FINISH

NOTE: MAXIMUM CARTRIDGE [illegible] MUST RELEASE BETWEEN [illegible] AND [illegible] FROM TOP OF BREECH BLOCK CLEARANCE CUT.

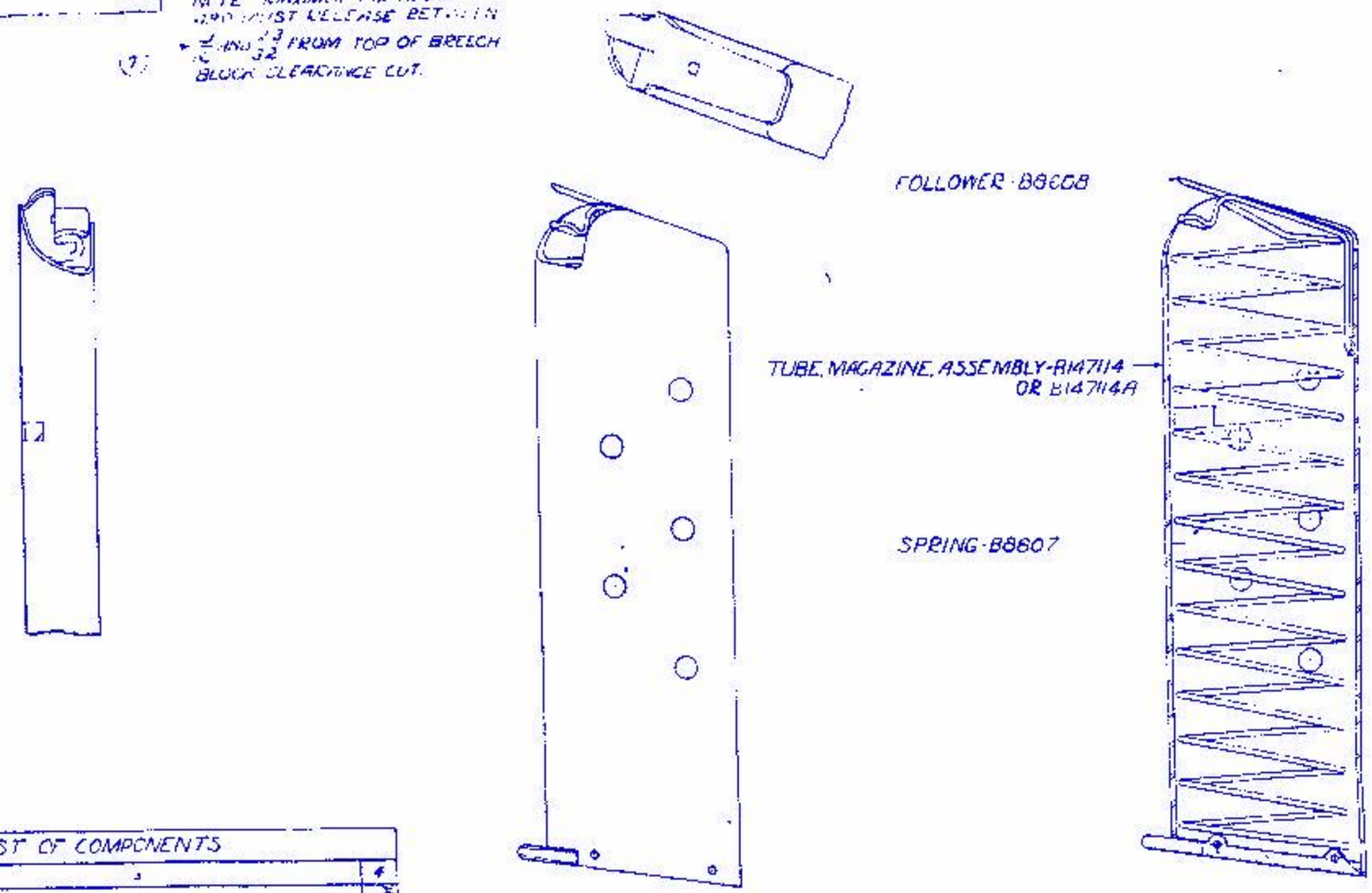

MAGAZINE, ASSEMBLY

PHYSICAL PROPERTIES		MAY [illegible] REVISIONS			
YP		5	1-8-44		
TS		4	3-15-44		
EL 2		7	8-8-44		
RED					
BR					
ROCK					

DRG. PERTAINS TO	
42-8	45AP-M11A1

LIST OF COMPONENTS

1 LINE NUMBER	2 DRAWING NUMBER OR PIECE MARK	3 NAME OF COMPONENT	4 NO REQUIRED PER UNIT ASM
1	C8694	MAGAZINE ASSEMBLY	(1)
2		COMPOSED OF	
3	B8608	1-FOLLOWER, MAGAZINE	
4	[illegible]	1-TUBE, MAGAZINE, ASSEMBLY *	
5	B8607	1 SPRING, MAGAZINE	

0 1 2 3 4 5 INCHES

*WILL NOT BE ISSUED FOR FIELD MAINTENANCE EXCEPT AS COMPONENTS OF AUTHORIZED ASSEMBLIES

SUPERSEDES OLD TRACING C8694 UNDER REVISION DATE OF JAN. 8, 1944

C8694

DESIGNER	TRACER	LEAD DESIGNER
[illegible]	[illegible]	E.C.P.
CHECKER		UNIT OFFICER
[illegible]	[illegible]	[illegible]

SUBMITTED:

ORDENG-ORD DEPT.

APPROVED BY ORDER OF THE CHIEF OF ORDNANCE:

LT COL. ORD DEPT.

ORDNANCE DEPT. U.S.A.

HEAT TREATMENT & FINAL FINISH

PHYSICAL PROPERTIES

TS		
RED	4	6-29-43
HIT	5	9-16-43
	6	1-1-43
BR	7	7-23-43
	8	9-28-43
SCL	9	11-29-43
C.C		

DOG PERTAINS TO

SYMBOL

CBT369

DFTSMAN	TRACER	LDR DFTSMAN
FCL	JC	A.J.C.

CHECKER

CHIEF DFTSMAN

SUBMITTED

APPROVED BY ORDER OF THE CHIEF OF ORDNANCE

ORDNANCE DEPT USA

TRIGGER

FINISH

FOR ALTERNATIVE SEE DRG. B147780

B8604-9

HARDEN

HARDEN END

MEDIUM KNURL

1/64 TO KNURL

TOLERANCE ±01 ALLOWED ON ALL DIMENSIONS UNLESS OTHERWISE SPECIFIED.

SUPERSEDES OLD TRACING B8604 UNDER REVISION DATE OF JAN. 19, 1936.

SCALE 2

B 8604

ORDNANCE DEPT USA

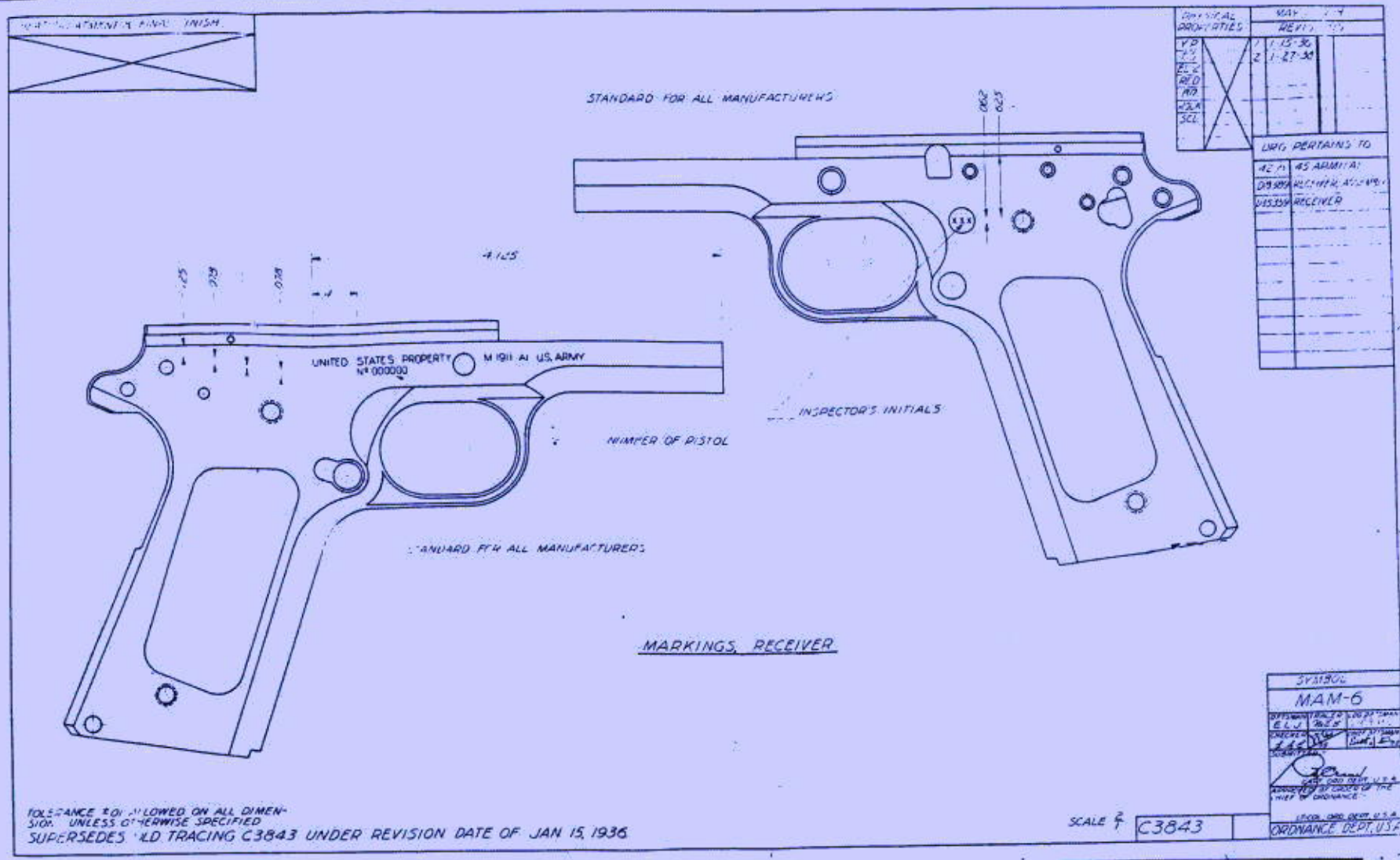
STANDARD FOR ALL MANUFACTURERS
.062
.025
4.125
.125
.078
.078
UNITED STATES PROPERTY
Nº 000000
M 1911 A1 U.S. ARMY
INSPECTOR'S INITIALS
NUMBER OF PISTOL
STANDARD FOR ALL MANUFACTURERS
MARKINGS, RECEIVER
PHYSICAL PROPERTIES
YP
EL 2
RED
MR
SCL
1 1-15-36
2 1-27-36
DRG PERTAINS TO
45 ARMITAL
RECEIVER
SYMBOL
MAM-6
E.L.J.
CHECKED
CAPT. ORD. DEPT. U.S.A.
APPROVED BY ORDER OF THE CHIEF OF ORDNANCE
LT. COL. ORD. DEPT. U.S.A.
ORDNANCE DEPT. U.S.A.
SCALE 2/1
C3843
TOLERANCE ±.01 ALLOWED ON ALL DIMENSION UNLESS OTHERWISE SPECIFIED
SUPERSEDES OLD TRACING C3843 UNDER REVISION DATE OF JAN 15, 1936

HEAT TREATMENT & FINAL FINISH

PHYSICAL PROPERTIES	MAY 1 1928 REVISIONS
Y.P.	1 1-15-36
T.S.	2 4-30-36
EL-2	3 1-2-38
RED.	4 8-15-38
HT. T	5 9-28-43
BR.	6 11-1-43
SCL.	
C.C.	

DRG. PERTAINS TO	
42 B	45 AP M11A1
C8697	SLIDE ASSEMBLY
D1827	SLIDE

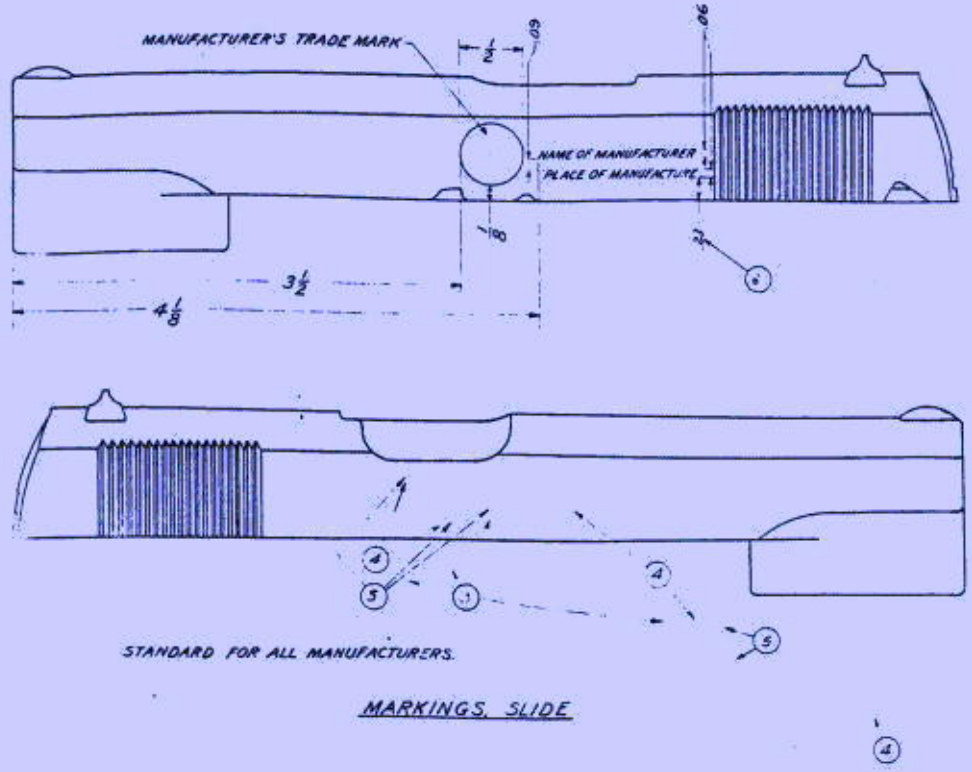

STANDARD FOR ALL MANUFACTURERS.

MARKINGS, SLIDE

TOLERANCE ±.01 ALLOWED ON ALL DIMENSIONS UNLESS OTHERWISE SPECIFIED.

SUPERSEDES OLD TRACING C3845 UNDER REVISION DATE OF APRIL 30, 1936.

SCALE 2/1

C 3845

SYMBOL

MAM-5

DFT'SMAN E.L.J. | TRACER | LOG. OF TSMAN

CHECKER | CHIEF OF TSMAN

SUBMITTED

CAPTAIN ORD. DEPT. U.S.A.

APPROVED BY ORDER OF THE CHIEF OF ORDNANCE.

LT. COL. IND. DEPT. U.S.A.

ORDNANCE DEPT. U.S.A.

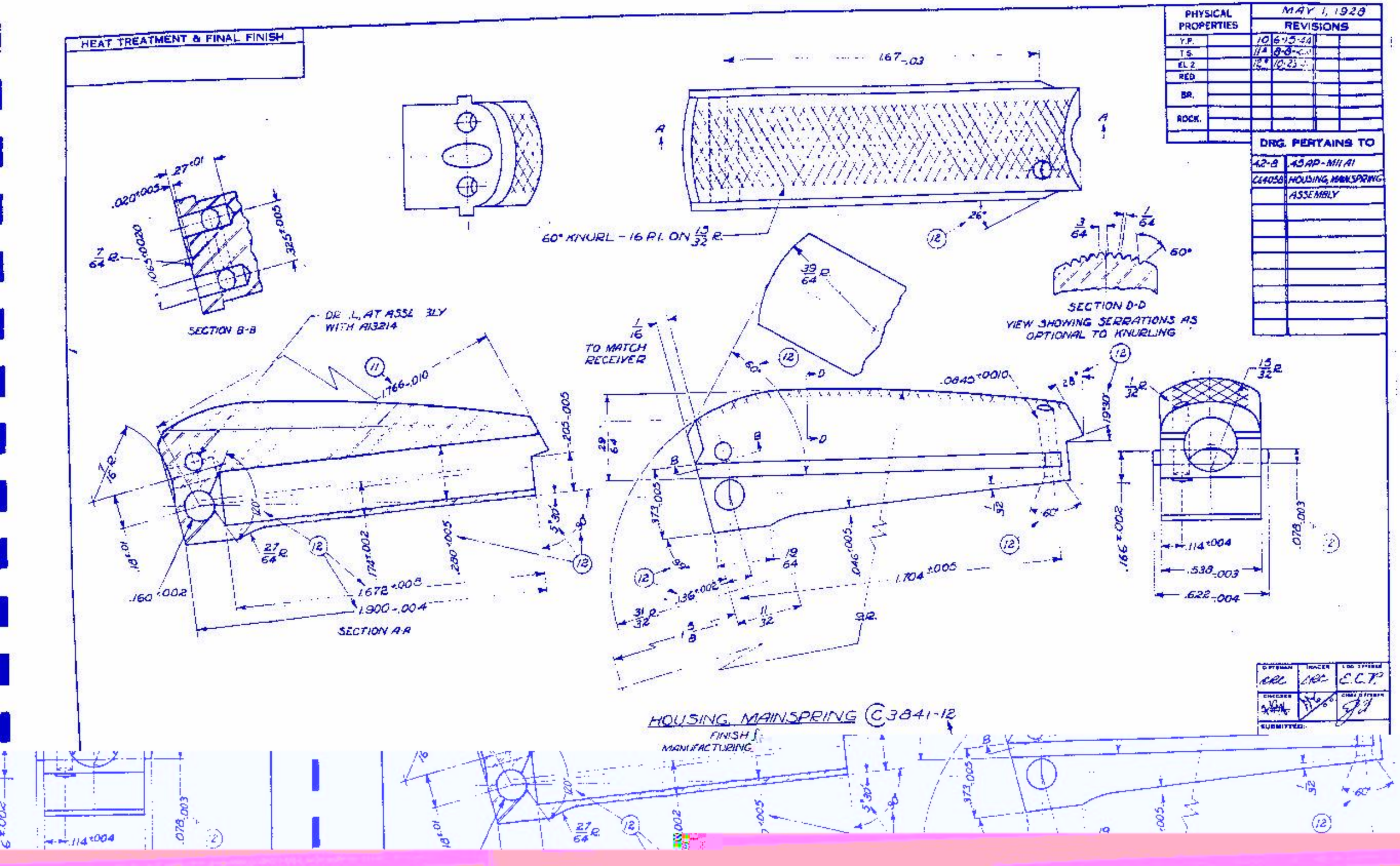
HEAT TREATMENT & FINAL FINISH
PHYSICAL PROPERTIES
Y.P.
T.S.
EL 2
RED
BR.
ROCK.
MAY 1, 1928
REVISIONS
10 6-15-44
11A 8-8-
12 10-23-
DRG. PERTAINS TO
42-8 .45AP-M11A1
C64058 HOUSING, MAINSPRING ASSEMBLY
1.67-.03
60° KNURL - 16 P.I. ON 15/32 R.
SECTION B-B
SECTION D-D
VIEW SHOWING SERRATIONS AS OPTIONAL TO KNURLING
TO MATCH RECEIVER
SECTION A-A
HOUSING, MAINSPRING C3841-12
FINISH
MANUFACTURING
E.C.T.
SUBMITTED:

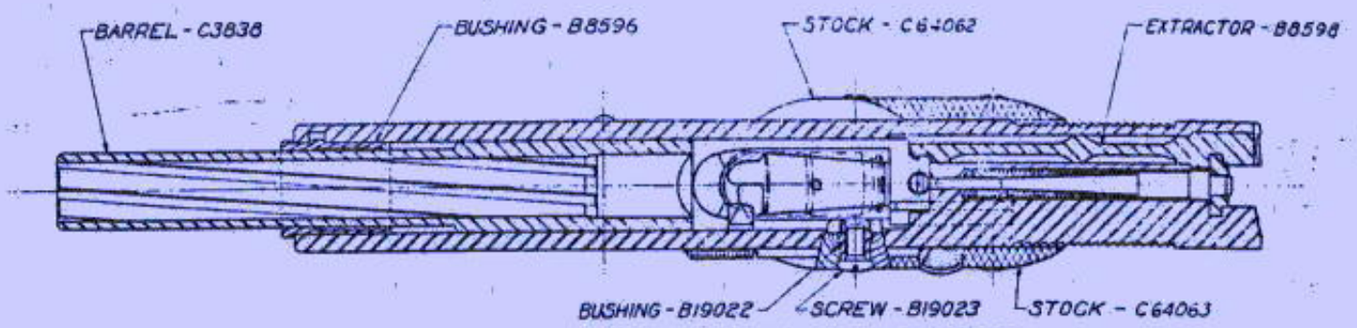

SECTION ON CENTER LINES OF BARREL, FIRING PIN, AND EXTRACTOR

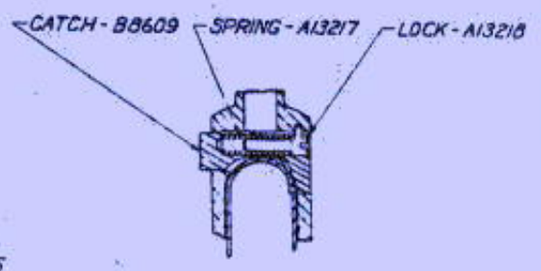

SECTION B-B
MAGAZINE LOCKED BY MAGAZINE CATCH

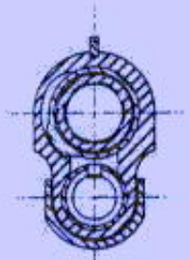

SECTION A-A
BARREL BUSHING LOCK IN POSITION

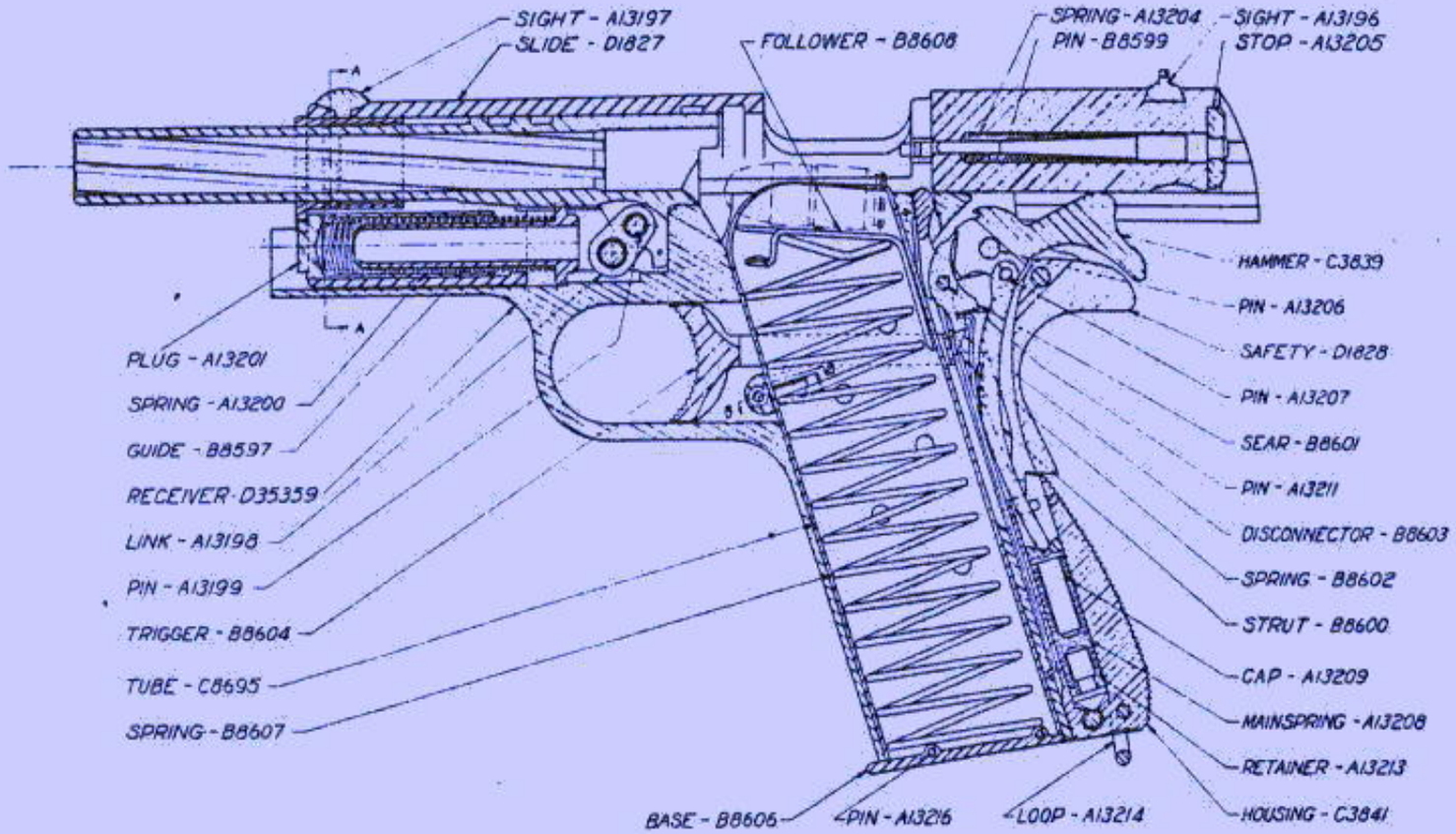

0 1 2 3 4 5 INCHES

PART OLD TRACING E269 UNDER REVISION DATE OF JAN 15 1936

PISTOL, AUTOMATIC
CAL. .45 M1911A1
SECTIONAL VIEWS

JAN. 3, 1936	CLASS	DIVISION	DRAWING	FILE
REVISIONS	42	8	32	

SYMBOL
VYP2

DRG PERTAINS TO	DFTSMAN	TRACED	LOC DFTSMAN
42-A 45A2-A1A1	R P S	R P S	G F C

CHECKED — CHIEF DFTSMAN

SUBMITTED
CAPT ORD DEPT U.S.A.

EXAMINED
LT COL ORD DEPT U.S.A.

APPROVED BY ORDER OF THE CHIEF OF ORDNANCE
LT COL ORD DEPT U.S.A.

ORDNANCE DEPT U.S.A.

SHEET 1 OF 2 SHEETS

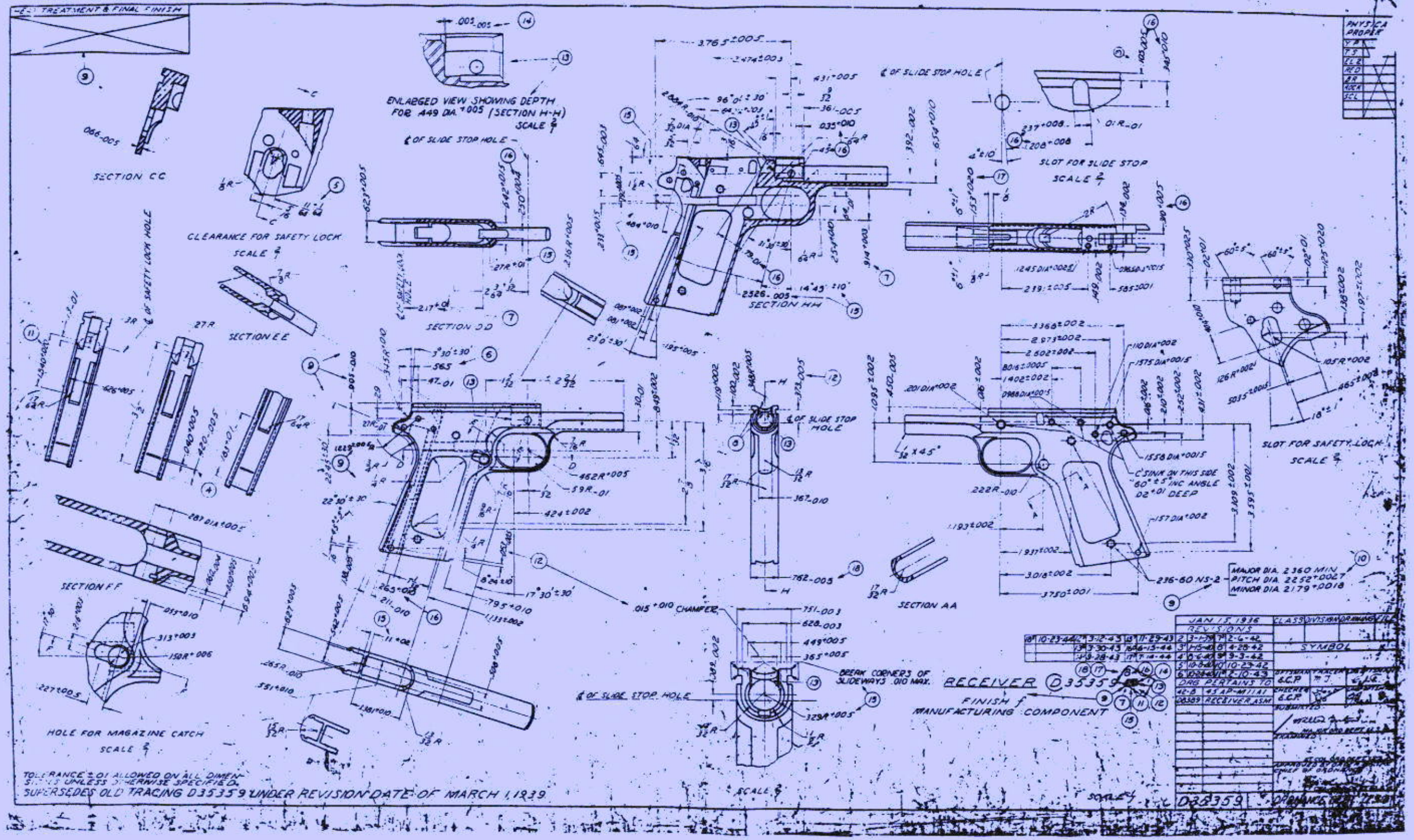

TREATMENT & FINAL FINISH
PHYSICA PROPER
ENLARGED VIEW SHOWING DEPTH FOR .449 DIA. +.005 (SECTION H-H) SCALE 2/1
SECTION CC
CLEARANCE FOR SAFETY LOCK SCALE 2/1
SECTION EE
SECTION DD
SECTION HH
SLOT FOR SLIDE STOP SCALE 2/1
SLOT FOR SAFETY LOCK SCALE 2/1
SECTION FF
HOLE FOR MAGAZINE CATCH SCALE 2/1
SECTION AA
℄ OF SLIDE STOP HOLE
℄ OF SAFETY LOCK HOLE
C'SINK ON THIS SIDE 60° ±5° INC ANGLE .02 +.01 DEEP
MAJOR DIA. 2.360 MIN
PITCH DIA. 2.252 +.0027
MINOR DIA. 2.179 +.0018
.015 +.010 CHAMFER
BREAK CORNERS OF SLIDEWAYS .010 MAX.
RECEIVER D35359
FINISH f
MANUFACTURING COMPONENT
JAN 15, 1936
REVISIONS
SYMBOL
DRG PERTAINS TO
42-8 45 AP-M11A1
D8389 RECEIVER ASM
D35359
TOLERANCE ±.01 ALLOWED ON ALL DIMENSIONS UNLESS OTHERWISE SPECIFIED.
SUPERSEDES OLD TRACING D35359 UNDER REVISION DATE OF MARCH 1, 1939

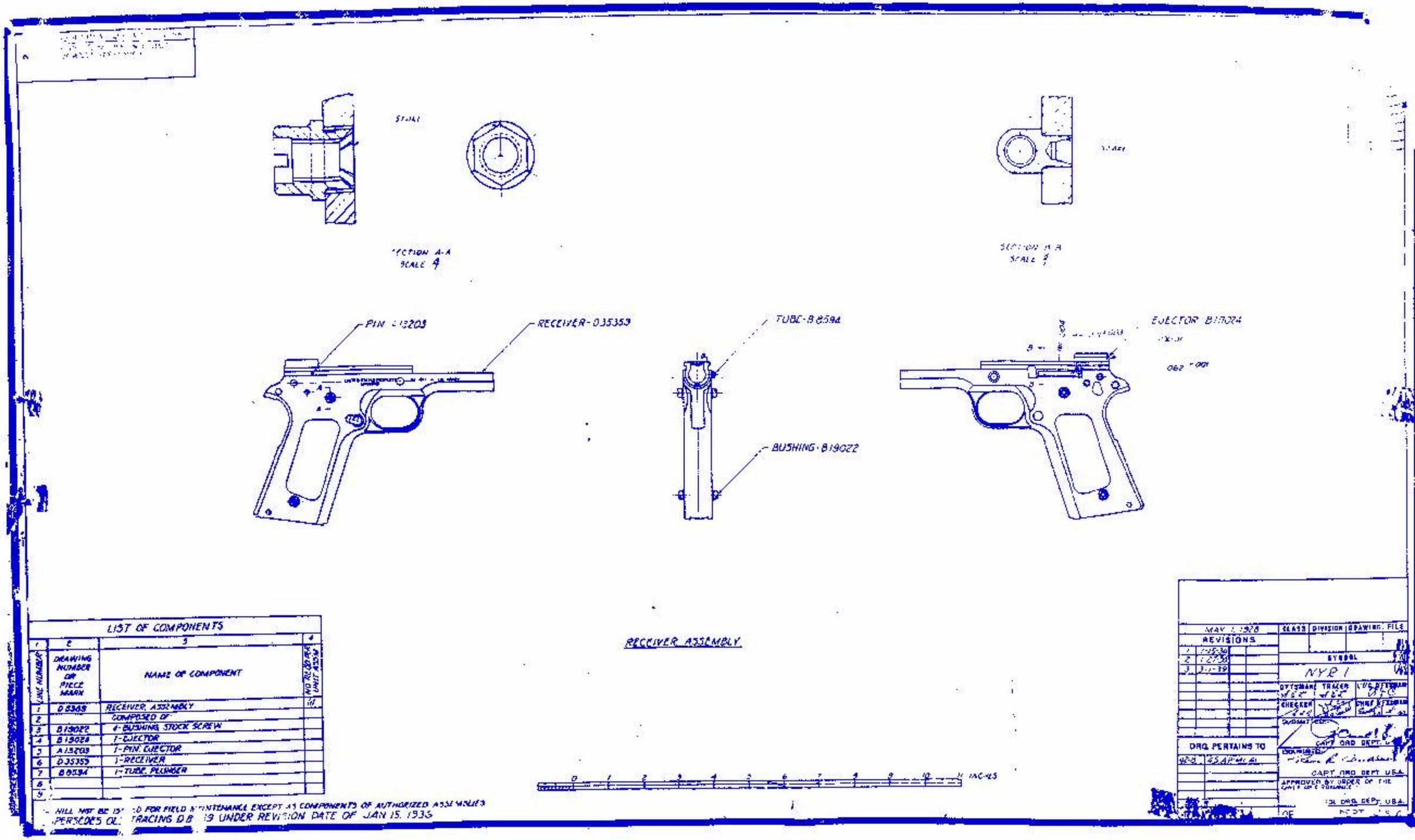

LIST OF COMPONENTS

1 LINE NUMBER	2 DRAWING NUMBER OR PIECE MARK	3 NAME OF COMPONENT	4 NO. REQ'D PER UNIT ASSM.
1	D 8369	RECEIVER, ASSEMBLY	1
2		COMPOSED OF	
3	B 19022	4-BUSHING, STOCK SCREW	
4	B 19024	1-EJECTOR	
5	A 13203	1-PIN, EJECTOR	
6	D 35353	1-RECEIVER	
7	B 8594	1-TUBE, PLUNGER	
8			
9			

- WILL NOT BE ISSUED FOR FIELD MAINTENANCE EXCEPT AS COMPONENTS OF AUTHORIZED ASSEMBLIES
PERSEDES OLD TRACING D 8 19 UNDER REVISION DATE OF JAN 15, 1936

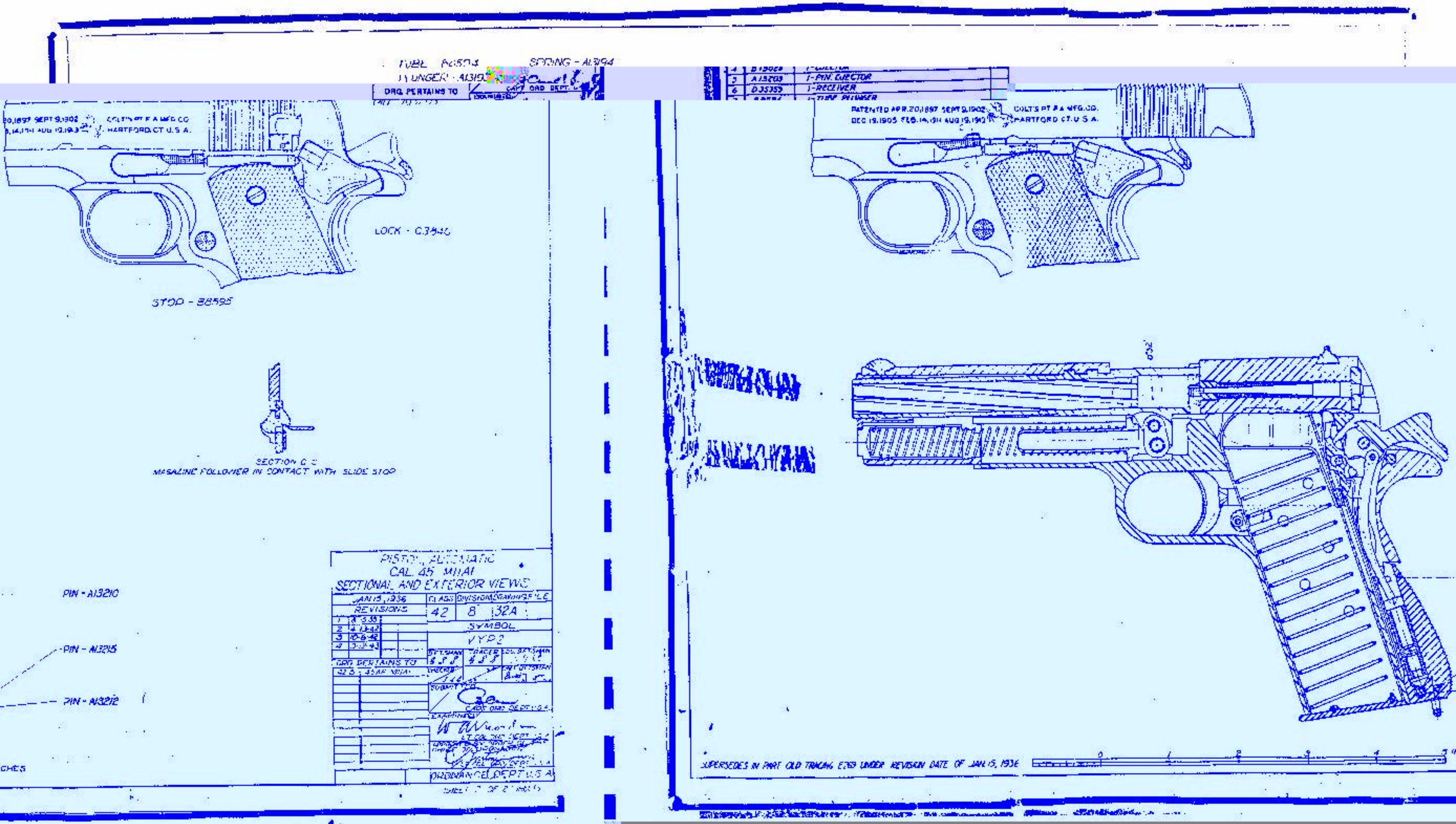

TUBE
SPRING - A13194
DRG. PERTAINS TO
CAPT. ORD. DEPT.
PATENTED APR.20,1897 SEPT.9,1902
DEC.19,1905 FEB.14,1911 AUG.19,1913
COLT'S PT. F.A. MFG. CO.
HARTFORD CT. U.S.A.
LOCK - C3846
STOP - B8595
SECTION C-C
MAGAZINE FOLLOWER IN CONTACT WITH SLIDE STOP
PIN - A13210
PIN - A13215
PIN - A13212
PISTOL, AUTOMATIC
CAL. 45 M11A1
SECTIONAL AND EXTERIOR VIEWS
JAN 15, 1936
REVISIONS
CLASS
DIVISION
DRAWING FILE
42
8
32A
SYMBOL
VYP2
DRG. PERTAINS TO
CAPT. ORD. DEPT. U.S.A.
ORDNANCE DEPT. U.S.A.
SUPERSEDES IN PART OLD TRACING E269 UNDER REVISION DATE OF JAN. 15, 1936

HEAT TREATMENT & FINAL FINISH

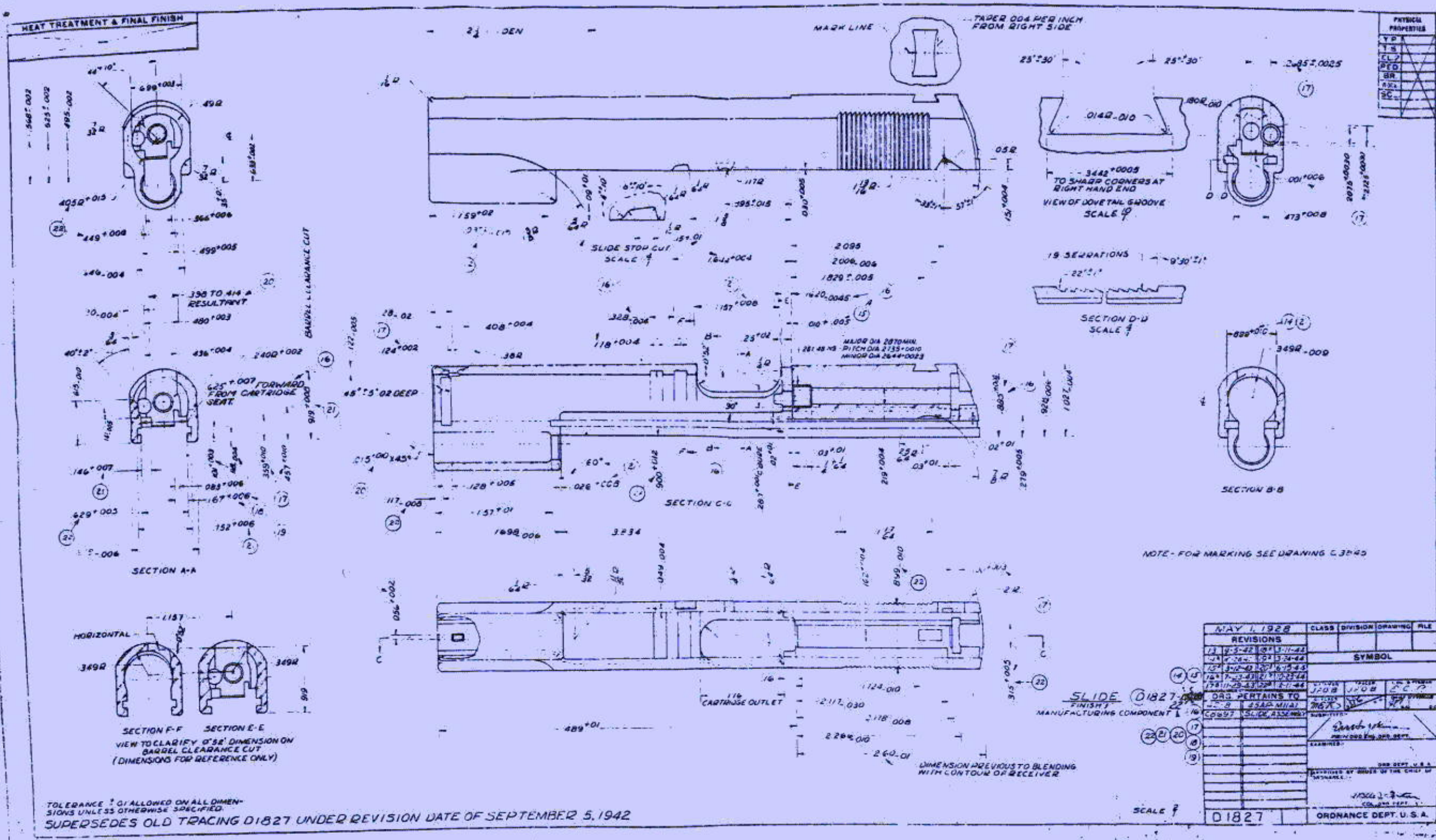

PHYSICAL PROPERTIES

YP	
TS	
CL %	
RED	
BR	
Rx	
SC	

TOLERANCE ± .01 IS ALLOWED ON ALL DIMENSIONS UNLESS OTHERWISE SPECIFIED.

SUPERSEDES OLD TRACING D1827 UNDER REVISION DATE OF SEPTEMBER 5, 1942

SLIDE D1827
FINISH
MANUFACTURING COMPONENT

SCALE

MAY 1, 1928	CLASS	DIVISION	DRAWING	FILE
REVISIONS				
13 9-5-42 JPOB 3-11-44				
14 7-14-43 JPOB 3-24-44				
15 3-12-43 JPOB 6-15-44				
16 7-13-43 JPOB 9-23-44				
17 11-29-43 JPOB 12-1-44				

SYMBOL

ORG PERTAINS TO	
C0897	SLIDE ASSEMBLY

DRAWN JPOB	TRACED JPOB	CHK & APPROVED FC 7
CHK'D MEK		

SUBMITTED

EXAMINED

APPROVED BY ORDER OF THE CHIEF OF ORDNANCE

ORDNANCE DEPT. U.S.A.

01827

HEAT TREATMENT & FINAL FINISH

PHYSICAL PROPERTIES	MAY 1, 1928 REVISIONS		
Y.P.	1	1-15-36	
T.S.	2	2-14-33	
EL-2	3	8-15-33	
RED.	4	3-1-35	
HT. T.	5	9-4-42	
BR.	6	2-6-43	
	7	10-23-44	
SCL.			
C.C.			

DRG. PERTAINS TO	
42-8	45AP-M11A1

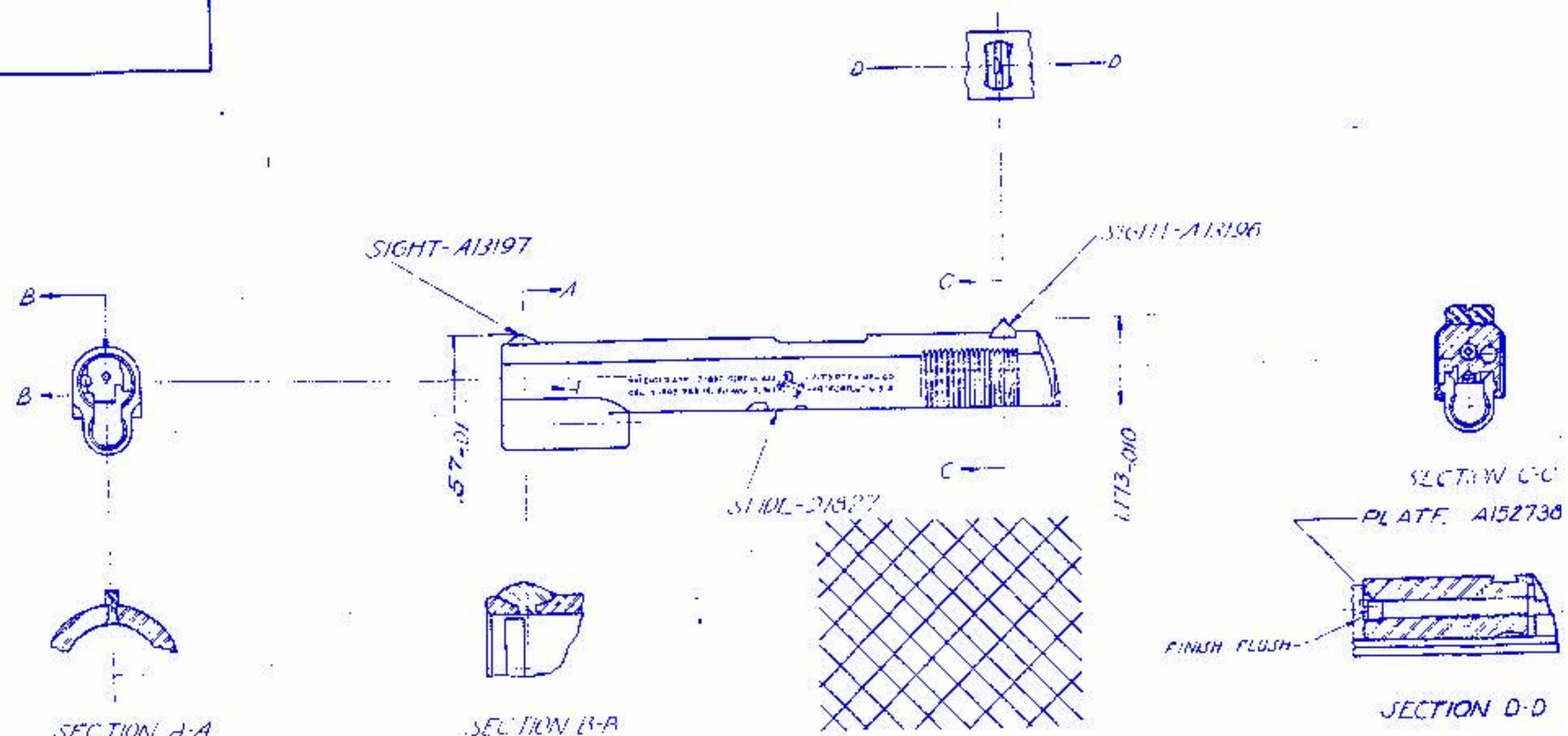

SLIDE, ASSEMBLY (C8697-7

LIST OF COMPONENTS

1	2	3	4
LINE NUMBER	DRAWING NUMBER OR PIECE MARK	NAME OF COMPONENT	NO. REQUIRED PER UNIT ASSEMBLY
1	C8697	SLIDE, ASSEMBLY	(1)
2		COMPOSED OF:	
3	A13197	1-SIGHT, FRONT	
4	A13196	1-SIGHT, REAR	
5	D1827	1-SLIDE *	
6	A152738	1-PLATE, RECOIL *	

TOLERANCE ±.01 ALLOWED ON ALL DIMENSIONS UNLESS OTHERWISE SPECIFIED.
* WILL NOT BE ISSUED FOR FIELD MAINTENANCE EXCEPT AS COMPONENTS OF AUTHORIZED ASSEMBLIES.
SUPERSEDES OLD TRACING C8697 UNDER REVISION DATE OF JAN. 15, 1936.

C8697

SYMBOL
XWS 5

DFTSMAN | TRACER | LDG DFTSMAN
CHECKER | | CHIEF DFTSMAN

SUBMITTED:
CAPT. ORD. DEPT. U.S.A.

APPROVED BY ORDER OF THE CHIEF OF ORDNANCE:
LT COL ORD. DEPT. U.S.A.

ORDNANCE DEPT. U.S.A.

HEAT TREATMENT & FINAL FINISH

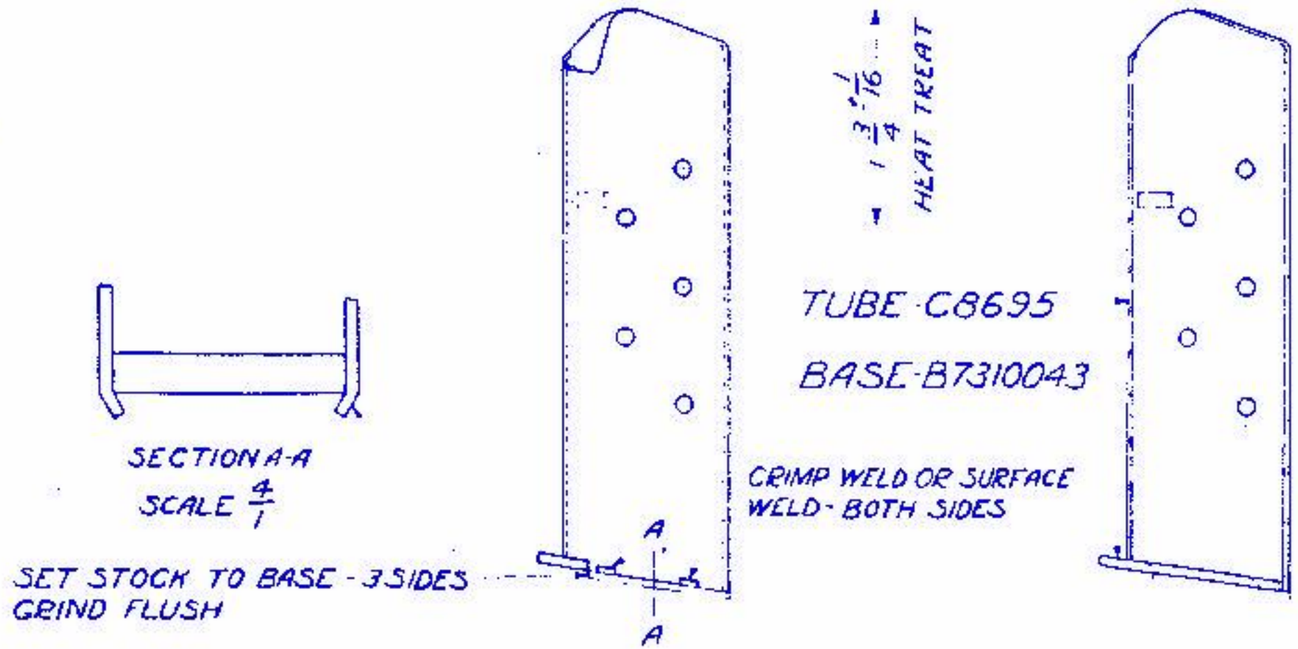

PHYSICAL PROPERTIES

Y.P.	
T.S.	
EL. 2	
RED	
BR	
ROCK	

JANUARY 8, 1944

REVISIONS

DRG. PERTAINS TO

42-8	45AP-M11A1
C8694	MAGAZINE, ASM

LIST OF COMPONENTS

1	2	3		4
LINE NUMBER	DRAWING NUMBER OR PIECE MARK	NAME OF COMPONENT		NO. REQUIRED PER UNIT ASM.
1	B147114A	TUBE, MAGAZINE, ASSEMBLY	*	(1)
2		COMPOSED OF		
3	B7310043	1-BASE, MAGAZINE	*	
4	C8695	1-TUBE, MAGAZINE	*	

*WILL NOT BE ISSUED FOR FIELD MAINTENANCE EXCEPT AS COMPONENTS OF AUTHORIZED ASSEMBLIES

TUBE, MAGAZINE, ASSEMBLY (B)147114 A
MANUFACTURING ASSEMBLY

FOR STANDARD DESIGN
SEE DRAWING B147114

0 1 2 3 4 5 IN.

SPRINGFIELD ARMORY

B147114A

DFTSMAN	TRACER	L'DG DFTSMAN
ERC	ERC	E.C.P.
CHECKER		CHIEF DFTSMAN

SUBMITTED:-
[signature]
OLD ENG ORD. DEPT

APPROVED BY ORDER OF THE CHIEF OF ORDNANCE:-
[signature]
LT. COL. ORD. DEPT.

ORDNANCE DEPT., U.S.A.