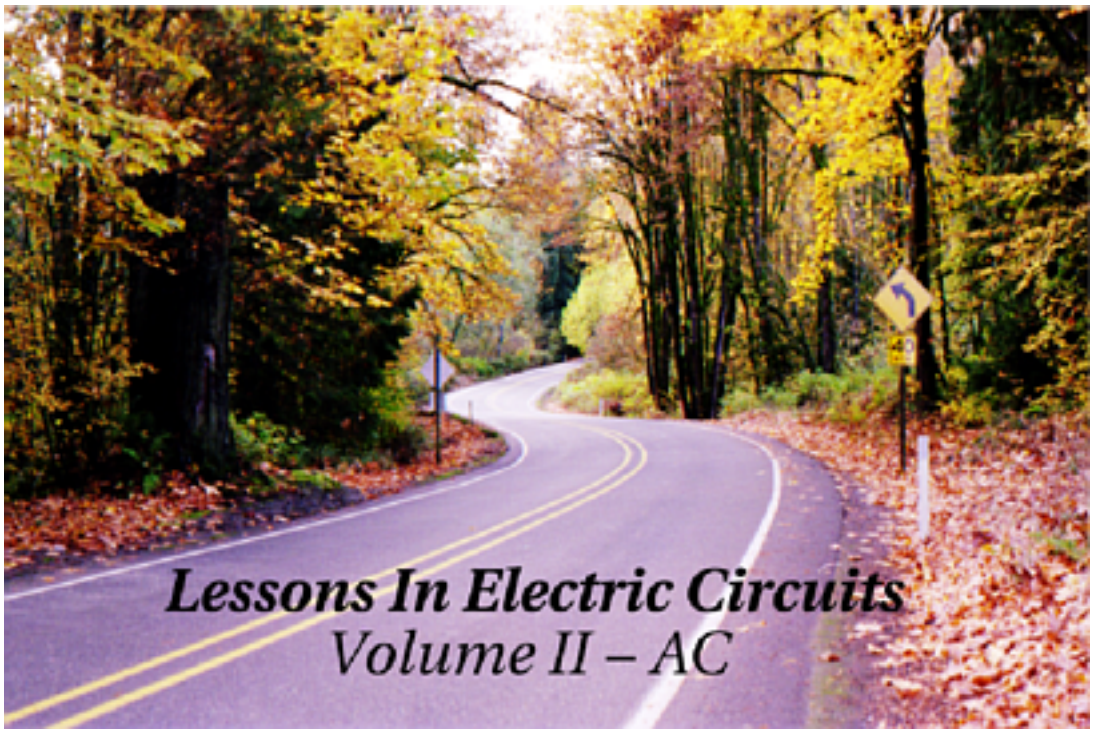

Fourth Edition, last update August 4, 2001

Lessons In Electric Circuits, Volume II – AC

By Tony R. Kuphaldt

Fourth Edition, last update August 4, 2001

© 2000, 2001, Tony R. Kuphaldt

This book is published under the terms and conditions of the Design Science License. These terms and conditions allow for free copying, distribution, and/or modification of this document by the general public. The full Design Science License text is included in the last chapter.

As an open and collaboratively developed text, this book is distributed in the hope that it will be useful, but WITHOUT ANY WARRANTY; without even the implied warranty of MERCHANTABILITY or FITNESS FOR A PARTICULAR PURPOSE. See the Design Science License for more details.

PRINTING HISTORY

- First Edition: Printed in June of 2000. Plain-ASCII illustrations for universal computer readability.
- Second Edition: Printed in September of 2000. Illustrations reworked in standard graphic (eps and jpeg) format. Source files translated to *Texinfo* format for easy online and printed publication.
- Third Edition: Equations and tables reworked as graphic images rather than plain-ASCII text.
- Fourth Edition: Printed in August 2001. Source files translated to *SubML* format. SubML is a simple markup language designed to easily convert to other markups like LaTeX, HTML, or DocBook using nothing but search-and-replace substitutions.

necessary.

If a machine is constructed to rotate a magnetic field around a set of stationary wire coils with the turning of a shaft, AC voltage will be produced across the wire coils as that shaft is rotated, in accordance with Faraday s Law of electromagnetic induction. This is the basic operating principle of an AC generator, also known as an *alternator*:

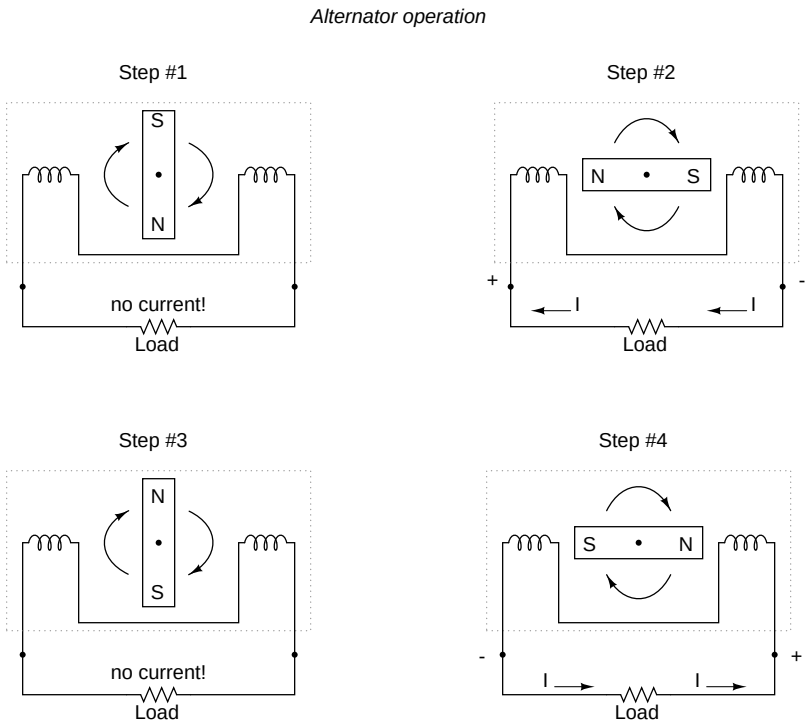

Notice how the polarity of the voltage across the wire coils reverses as the opposite poles of the rotating magnet pass by. Connected to a load, this reversing voltage polarity will create a reversing current direction in the circuit. The faster the alternator s shaft is turned, the faster the magnet will spin, resulting in an alternating voltage and current that switches directions more often in a given amount of time.

While DC generators work on the same general principle of electromagnetic induction, their construction is not as simple as their AC counterparts. With a DC generator, the coil of wire is mounted in the shaft where the magnet is on the AC alternator, and electrical connections are made to this spinning coil via stationary carbon *brushes* contacting copper strips on the rotating shaft. All this is necessary to switch the coil s changing output polarity to the external circuit so the external circuit sees a constant polarity:

(DC) Generator operation

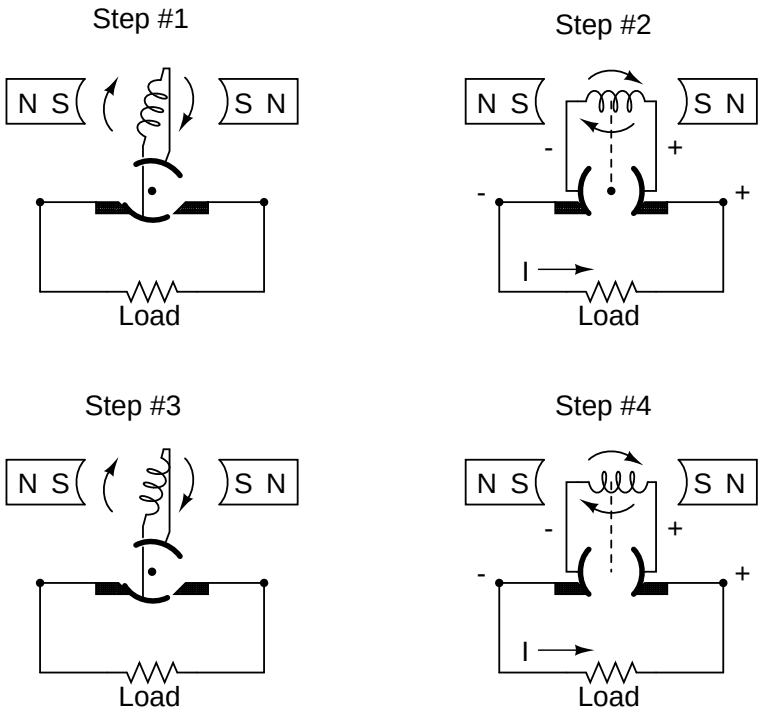

The generator shown above will produce two pulses of voltage per revolution of the shaft, both pulses in the same direction (polarity). In order for a DC generator to produce*onn* voltage, rather than brief pulses of voltage once every 1/2 revolution, there are multiple sets of coils making intermittent contact with the brushes. The diagram shown above is a bit more simplified than what you would see in real life.

The problems involved with making and breaking electrical contact with a moving coil should be obvious (sparking and heat), especially if the shaft of the generator is revolving at high speed. If the atmosphere surrounding the machine contains ammable or explosive vapors, the pra ctical problems of spark-producing brush contacts are even greater. An AC generator (alternator) does not require brushes and commutators to work, and so is immune to these problems experienced by DC generators.

The benefits of AC over DC with regard to generator design is also ree cted in electric motors. While DC motors require the use of brushes to make electrical contact with moving coils of wire, AC motors do not. In fact, AC and DC motor designs are very similar to their generator counterparts (identical for the sake of this tutorial), the AC motor being dependent upon the reversing magnetic field produced by alternating current through its stationary coils of wire to rotate the rotating magnet around on its shaft, and the DC motor being dependent on the brush contacts making and breaking connections to reverse current through the rotating coil every 1/2 rotation (10 degrees).

So we know that AC generators and AC motors tend to be simpler than DC generators and DC motors. This relative simplicity translates into greater reliability and lower cost of manufacture. But what else is AC good for Surely there must be more to it than design details of generators and

motors Indeed there is. There is an e e ct of electromagnetism known as *uuinuion*, whereby two or more coils of wire placed so that the changing magnetic field created by one induces a voltage in the other. If we have two mutually inductive coils and we energi e one coil with AC, we will create an AC voltage in the other coil. When used as such, this device is known as a*nfo e*:

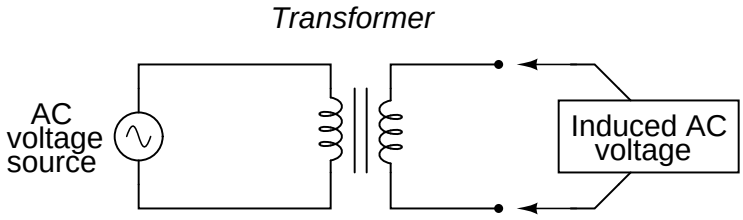

The fundamental significance of a transformer is its ability to step voltage up or down from the powered coil to the unpowered coil. The AC voltage induced in the unpowered (secondary) coil is equal to the AC voltage across the powered (primary) coil multiplied by the ratio of secondary coil turns to primary coil turns. If the secondary coil is powering a load, the current through the secondary coil is just the opposite: primary coil current multiplied by the ratio of primary to secondary turns. This relationship has a very close mechanical analogy, using torque and speed to represent voltage and current, respectively:

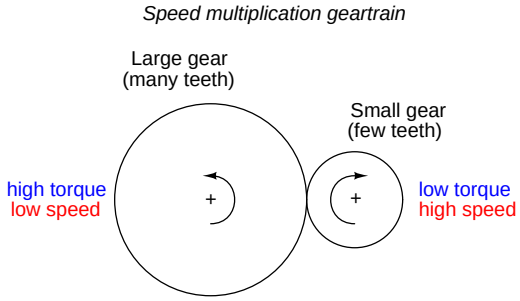

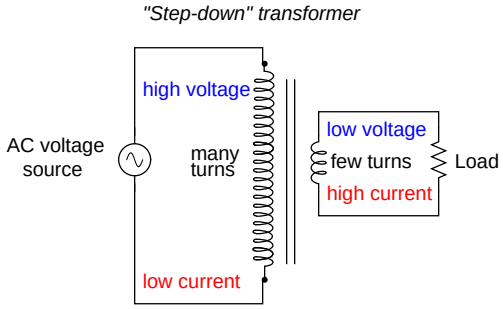

If the winding ratio is reversed so that the primary coil has less turns than the secondary coil, the transformer steps up the voltage from the source level to a higher level at the load:

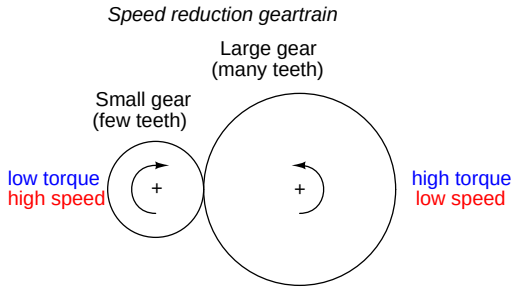

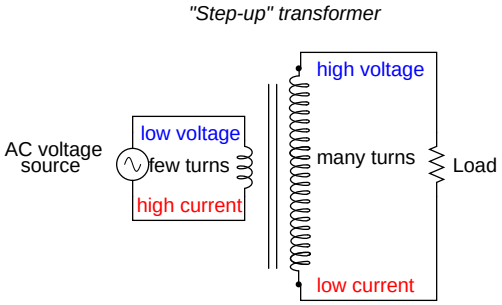

The transformer s ability to step AC voltage up or down with ease gives AC an advantage unmatched by DC in the realm of power distribution. When transmitting electrical power over long distances, it is far more e cient to do so with stepped-up voltages and stepped-down currents (smaller-diameter wire with less resistive power losses), then step the voltage back down and the current back up for industry, business, or consumer use use.

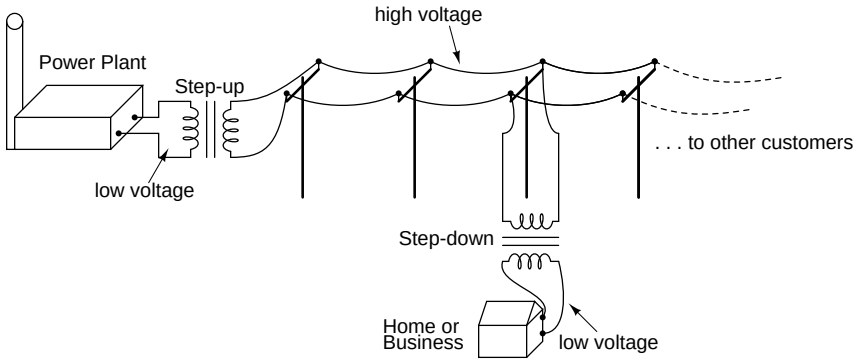

Transformer technology has made long-range electric power distribution practical. Without the ability to e ciently step voltage up and down, it would be cost-prohibitive to construct power systems for anything but close-range (within a few miles at most) use.

As useful as transformers are, they only work with AC, not DC. Because the phenomenon of mutual inductance relies on*nin* magneti c fields, and direct current (DC) can only produce steady magnetic fields, transformers simply will not work with direct current. Of course, direct

current may be interrupted (pulsed) through the primary winding of a transformer to create a changing magnetic field (as is done in automotive ignition systems to produce high-voltage spark plug power from a low-voltage DC battery), but pulsed DC is not that di erent from AC. Perhaps more than any other reason, this is why AC finds such widespread application in power systems.

- **REIE**
- DC stands for Direct Current, meaning voltage or current that maintains constant polarity or direction, respectively, over time.
- AC stands for Alternating Current, meaning voltage or current that changes polarity or direction, respectively, over time.
- AC electromechanical generators, known as*ero*, are of simpler construction than DC electromechanical generators.
- AC and DC motor design follows respective generator design principles very closely.
- A *nfo e* is a pair of mutually-indu ctive coils used to convey AC power from one coil to the other. Often, the number of turns in each coil is set to create a voltage increase or decrease from the powered (primary) coil to the unpowered (secondary) coil.
- Secondary voltage Primary voltage (secondary turns / primary turns)
- Secondary current Primary current (primary turns / secondary turns)

When an alternator produces AC voltage, the voltage switches polarity over time, but does so in a very particular manner. When graphed over time, the wave traced by this voltage of alternating polarity from an alternator takes on a distinct shape, known as a*ine e*:

Graph of AC voltage over time (the sine wave)

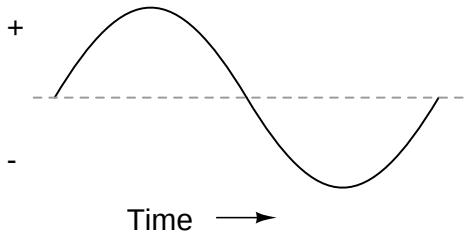

In the voltage plot from an electromechanical alternator, the change from one polarity to the other is a smooth one, the voltage level changing most rapidly at theero (crossover) point and most slowly at its peak. If we were to graph the trigonometric function of sine over a hori ontal range of 0 to0 degrees, we would find the exa ct same pattern:

The reason why an electromechanical alternator outputs sine-wave AC is due to the physics of its operation. The voltage produced by the stationary coils by the motion of the rotating magnet is proportional to the rate at which the magnetic ux is changing perpendicular to the coils (Faraday s Law of Electromagnetic Induction). That rate is greatest when the magnet poles are closest to the coils, and least when the magnet poles are furthest away from the coils. Mathematically, the rate of magnetic ux change due to a rotating magnet follows that of a sine function, so the voltage produced by the coils follows that same function.

If we were to follow the changing voltage produced by a coil in an alternator from any point on the sine wave graph to that point when the wave shape begins to repeat itself, we would have marked exactly onœ of that wave. This is most easily shown by spanning the distan ce between identical peaks, but can be measured between any corresponding points on the graph. The degree marks on the hori ontal axis of the graph represent the domain of the trigonometri c sine function, and also the angular position of our simple two-pole alternator shaft as it rotates:

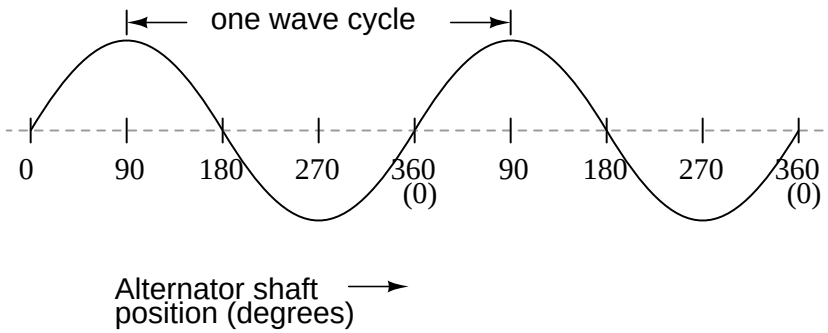

Since the hori ontal axis of this graph can mark the passage of time as well as shaft position in degrees, the dimension marked for one cycle can be measured in a unit of time, most often seconds or fractions of a second. When expressed as a measurement, this is often called the *peio* of a wave. The period of a wave in degrees is 0, but the amount of time one period o ccupies depends on the rate voltage is alternating back and forth.

A more popular measure for describing the alternating rate of an AC voltage or current wave than *peio* is the speed of that ba ck-and-forth alternation. This is called *fequen*. The modern unit for frequency is the Hert (abbreviated H), whi ch is equal to one wave cycle per second of time. Prior to the canoni ation of the Hert unit, frequen cy was simply expressed as cycles per second. Older meters and electronic equipment often bore frequency units of CPS (Cycles Per Second) instead of H

Period and frequency are mathematical reciprocals of one another. That is to say, if a wave has a period of 10 seconds, its frequency will be 0.1 H, or 1/10 a cycle per second:

$$\text{Frequency in Hertz} = \frac{1}{\text{Period in seconds}}$$

An instrument called an *oioope* is expressly designed to display a changing voltage over time on a graphical screen. The relationship between period and frequency is very useful to know when displaying an AC voltage or current waveform on an oscilloscope screen. By measuring the period of the wave on the hori ontal axis of the os cilloscope screen and reciprocating that time value (in seconds), you can determine the frequency in Hert.

oltage and current are by no means the only physical variables subject to variation over time. Much more common to our everyday experience is *oun*, whi ch is nothing more than the alternating compression and decompression (pressure waves) of air molecules, interpreted by our ears as a physical sensation. Because alternating current is a wave phenomenon, it shares many of the properties of other wave phenomena, like sound. For this reason, sound (especially structured music) provides an excellent analogy for relating AC concepts.

In musical terms, frequency is equivalent to *pi* . Low-pit ch notes such as those produced by a tuba or bassoon consist of air molecule vibrations that are relatively slow (low frequency). High-pitch notes such as those produced by aute or whistle consist of the same type of vibrations in the air, only vibrating at a much faster rate (higher frequency). Here is a table showing the actual frequencies for a range of common musical notes:

Note	Musical designation	Frequency (in hertz)
A	A_1	220.00
A sharp (or B flat)	$A^{\#}$ or B^{b}	233.08
B	B_1	246.94
C (middle)	C	261.63
C sharp (or D flat)	$C^{\#}$ or D^{b}	277.18
D	D	293.66
D sharp (or E flat)	$D^{\#}$ or E^{b}	311.13
E	E	329.63
F	F	349.23
F sharp (or G flat)	$F^{\#}$ or G^{b}	369.99
G	G	392.00
G sharp (or A flat)	$G^{\#}$ or A^{b}	415.30
A	A	440.00
A sharp (or B flat)	$A^{\#}$ or B^{b}	466.16
B	B	493.88
C	C^{1}	523.25

Astute observers will notice that all notes on the table bearing the same letter designation are related by a frequency ratio of 2:1. For example, the first frequency shown (designated with the letter A) is 220 H The next highest A note has a frequency of 0 H– exa ctly twice as many sound wave cycles per second. The same 2:1 ratio holds true for the first A sharp (2. 0 H) and the next A sharp (.1 H), and for all note pairs found in the table.

Audibly, two notes whose frequencies are exactly double each other sound remarkably similar. This similarity in sound is musically recogni ed, the shortest span on a musi cal scale separating such note pairs being called an *oe*. Following this rule, the next highest A note (one octave above 0 H) will be0 H, the next lowest A (one octave below 220 H) will be 110 H A view of a piano keyboard helps to put this scale into perspective:

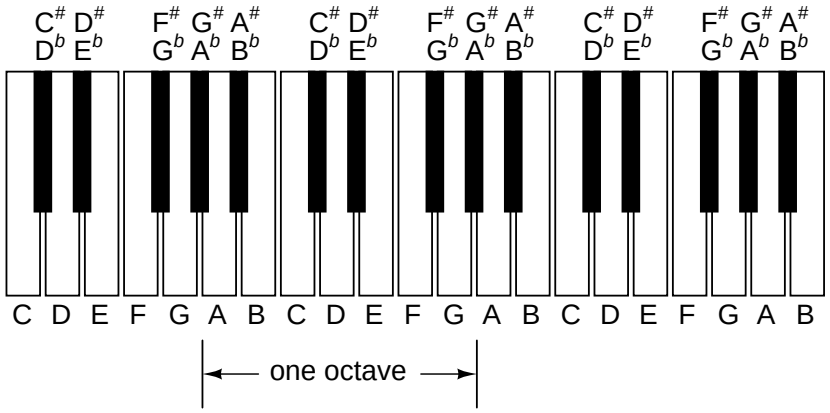

As you can see, one octave is equal to *ei* white keysworth of distan ce on a piano keyboard. The

familiar musical mnemonic (doe-ray-mee-fah-so-lah-tee-doe) – yes, the same pattern immortali ed in the whimsical Rodgers and Hammerstein song sung in The Sound of Music – covers one octave from C to C.

While electromechanical alternators and many other physical phenomena naturally produce sine waves, this is not the only kind of alternating wave in existence. Other waveforms of AC are commonly produced within electronic circuitry. Here are but a few sample waveforms and their common designations:

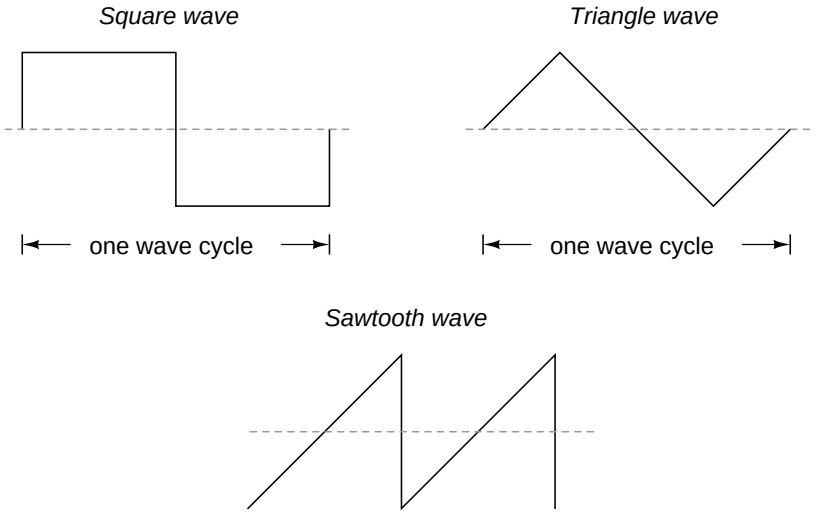

These waveforms are by no means the only kinds of waveforms in existence. They re simply a few that are common enough to have been given distinct names. Even in circuits that are supposed to manifest pure sine, square, triangle, or sawtooth voltage/current waveforms, the real-life result is often a distorted version of the intended waveshape. Some waveforms are so complex that they defy classification as a particular type (including waveforms associated with many kinds of musical instruments). Generally speaking, any waveshape bearing close resemblance to a perfect sine wave is termed *inuoi* , anything di erent being labeled as *non- inuoi* . Being that the waveform of an AC voltage or current is crucial to its impact in a circuit, we need to be aware of the fact that AC waves come in a variety of shapes.

- **RE IE**
- AC produced by an electromechanical alternator follows the graphical shape of a sine wave.
- Onæ of a wave is one complete evolution of its shape until the point that it is ready to repeat itself.
- The *peio* of a wave is the amount of time it takes to complete one cycle.
- *F equen* is the number of complete cycles that a wave completes in a given amount of time. Usually measured in Hert (H), 1 Hbeing equal to one complete wave cycle per second.
- Frequency 1/(period in seconds)

3 M d

So far we know that AC voltage alternates in polarity and AC current alternates in direction. We also know that AC can alternate in a variety of di erent ways, and by tra cing the alternation over time we can plot it as a waveform. We can measure the rate of alternation by measuring the time it takes for a wave to evolve before it repeats itself (the period), and express this as cycles per unit time, or frequency. In music, frequency is the same as *pi* , whi ch is the essential property distinguishing one note from another.

However, we encounter a measurement problem if we try to express how large or small an AC quantity is. With DC, where quantities of voltage and current are generally stable, we have little trouble expressing how much voltage or current we have in any part of a circuit. But how do you grant a single measurement of magnitude to something that is constantly changing

One way to express the magnitude (or *p iue*) of an AC quantity is to measure its peak height on a waveform graph. This is known as the *pek* or*e* value of an AC waveform:

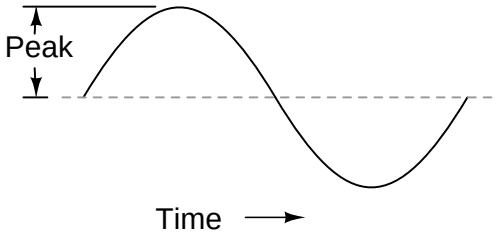

Another way is to measure the total height between opposite peaks. This is known as the *pek-o-pek* (P-P) value of an AC waveform:

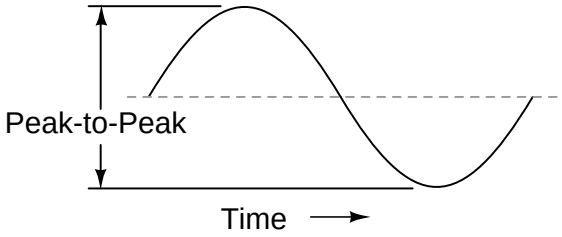

Unfortunately, either one of these expressions of waveform amplitude can be misleading when comparing two di erent types of waves. For example, a square wave peaking at 10 volts is obviously a greater amount of voltage for a greater amount of time than a triangle wave peaking at 10 volts. The e e cts of these two AC voltages powering a load would be quite di erent:

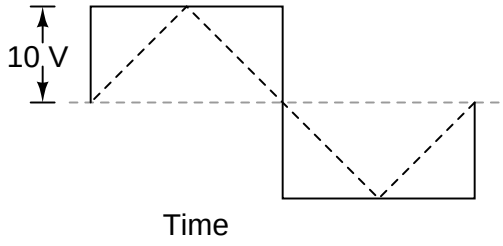

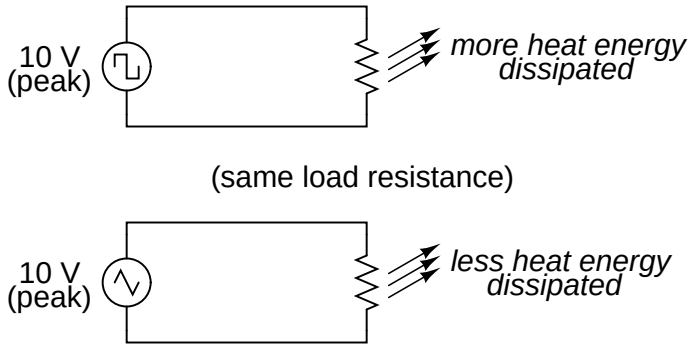

One way of expressing the amplitude of di erent waveshapes in a more equivalent fashion is to mathematically average the values of all the positive or negative points on a waveform s graph to a single, aggregate number. This amplitude measure, simply known as the *ee*, is the value naturally indicated by an electromechanical meter movement, due to the averaging ee ct of the needle s inertia. The best way to express the amplitudes of AC waveforms equivalently, however, is to rate them in terms of their*bi io pefo uefu ok*, and the mathemati cal average of an AC waveform doesn t represent that.

Anyone familiar with modern woodworking equipment knows what a bandsaw and a jigsaw are. Both types of saws cut with a thin, toothed, motor-powered metal blade to cut wood. But while the bandsaw uses a continuous motion of the blade to cut, the jigsaw uses a back-and-forth motion. The comparison of alternating current (AC) to direct current (DC) can be likened to the comparison of these two saw types:

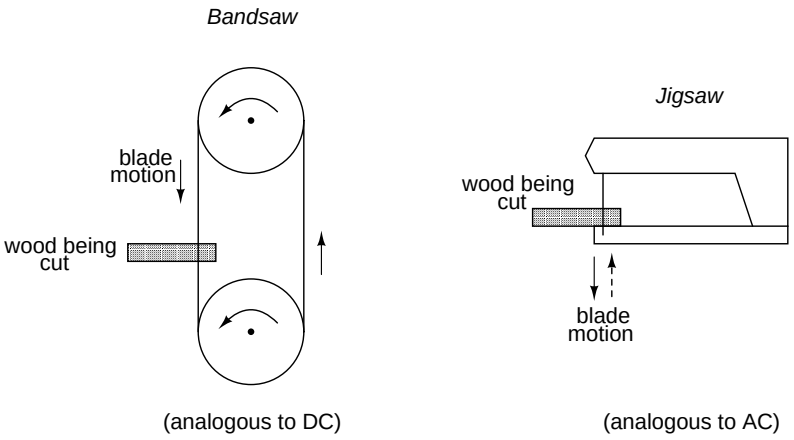

The problem of trying to describe the changing quantities of AC voltage or current in a single measurement is also present in this saw analogy: how might we express the speed of a jigsaw blade A bandsaw blade moves with a constant speed, similar to the way DC voltage pushes or DC current moves with a constant magnitude. A jigsaw blade, on the other hand, moves back and forth, its blade speed constantly changing. What is more, the back-and-forth motion of any two jigsaws may not be of the same type, depending on the mechanical design of the saws. One jigsaw might move its blade with a sine-wave motion, while another with a triangle-wave motion. To rate a jigsaw based on its *pek* blade speed would be quite misleading when comparing one saw to another (or a jigsaw with a bandsaw). Despite the fact that these di erent saws move their blades in di erent manners, they are equal in one respect: they all cut wood, and a measurement of this equal function can serve as a common basis for which to rate blade speed.

Picture a jigsaw and bandsaw side-by-side, equipped with identical blades (same tooth pitch, angle, etc.), equally capable of cutting the same thickness of the same type of wood at the same rate. We might say that the two saws were equivalent or equal in their cutting capacity. Might this comparison be used to assign a bandsaw equivalent blade speed to the jigsaw s back-and-forth blade motion; to relate the wood-cutting e e ctiveness of one to the other This is the general idea used to assign a DC equivalent measurement to any AC voltage or current: whatever magnitude of DC voltage or current would produce the same amount of heat energy dissipation through an equal resistance:

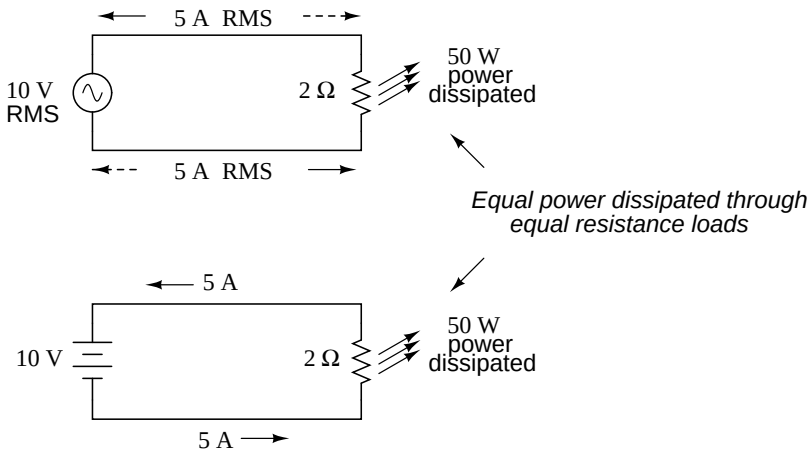

In the two circuits above, we have the same amount of load resistance (2 Ω) dissipating the same amount of power in the form of heat (0 watts), one powered by AC and the other by DC. Because the AC voltage source pictured above is equivalent (in terms of power delivered to a load) to a 10 volt DC battery, we would call this a 10 volt AC source. More specifically, we would denote its voltage value as being 10 volts *RMS*. The qualifier RMS stands for *Roo Men Squæ*, whi ch is the mathematical method of deriving the DC equivalent value from points on a graph (essentially, this method consists of squaring all the positive and negative points on a waveform graph, averaging those squared values, then taking the square root of that average to obtain the final answer). Sometimes the alternative terms *equien* or *DC equien* are used instead of RMS, but the idea is the same.

RMS amplitude measurement is the best way to relate AC quantities to DC quantities, or other AC quantities of di ering waveform shapes, when dealing with measurements of ele ctric power. For other considerations, peak or peak-to-peak measurements may be the best to employ. For instance, when determining the proper si e of wire (ampacity) to conduct electric power from a source to a load, RMS current measurement is the best to use, because the principal concern with current is overheating of the wire, which is a function of power dissipation caused by current through the resistance of the wire. However, when rating insulators for service in high-voltage AC applications, peak voltage measurements are the most appropriate, because the principal concern here is insulator ashover caused by brief spikes of voltage, irrespective of time.

Peak and peak-to-peak measurements are best performed with an oscilloscope, which can capture the crests of the waveform with a high degree of accuracy due to the fast action of the cathode-ray-tube in response to changes in voltage. For RMS measurements, analog meter movements (D Arsonval, Weston, iron vane, electrodynamometer) will work so long as they have been calibrated in RMS figures. Remember that analog meter movements naturally indicate thee e value of a voltage or a current. A calibration factor for RMS assumes a particular waveshape where the relationship between average and RMS is known. Electronic meters specifically designed for RMS measurement are best for the task. Some instrument manufacturers have designed ingenious methods for determining the RMS value of any waveform. One such manufacturer produces True-RMS meters with a tiny resistive heating element powered by a voltage proportional to that being measured. The heating e e ct of that resistance element is measured thermally to give a true RMS value with no mathematical calculations whatsoever, just the laws of physics in action in fulfillment

of the definition of RMS.

For pure waveforms, simple conversion coe cients can be calculated which equate Peak, Peak-to-Peak, Average, and RMS measurements.

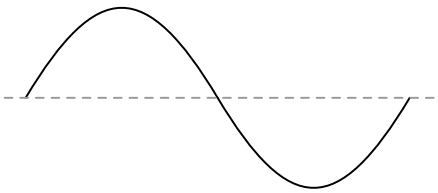

RMS = 0.707 (Peak)
AVG = 0.637 (Peak)
P-P = 2 (Peak)

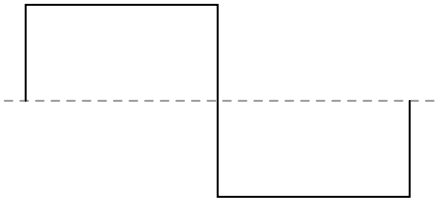

RMS = Peak
AVG = Peak
P-P = 2 (Peak)

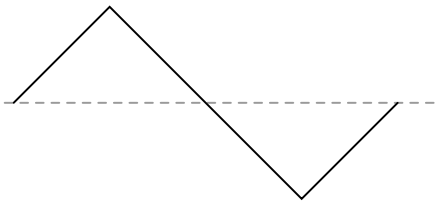

RMS = 0.577 (Peak)
AVG = 0.5 (Peak)
P-P = 2 (Peak)

Bear in mind that the conversion constants shown above for RMS and average measurements hold true only for *pure* waveshapes. The RMS and average values of distorted waveshapes are not related by the same multiplier values:

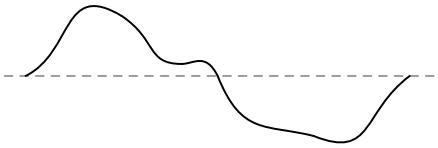

RMS = ???
AVG = ???
P-P = 2 (Peak)

This is a very important concept to understand when using an analog meter movement to measure AC voltage or current. An analog movement, calibrated to indicate RMS, will only be accurate when measuring pure sine waves. If the waveform of the voltage or current being measured is anything but a pure sine wave, the indication given by the meter will not be the true RMS value of the waveform. The amount of needle dee ction in an analog meter movement is proportional to the*e e* value of the waveform, not the RMS. RMS meter calibration is obtained by skewing the span of the meter so that it displays a fixed proportion of the average value known to be the RMS value *fo pi ue pe*. Sin ce the sine-wave shape is most common in electrical measurements, it is the waveshape assumed for analog meter calibration. Any other waveshape will have a di erent proportion between its average and RMS values, and so a meter calibrated for sine-wave voltage or current will not indicate true RMS when reading a non-sinusoidal wave.

- **RE IE**

- The *p iue* of an AC waveform is its height as depicted on a graph over time. An amplitude measurement can take the form of peak, peak-to-peak, average, or RMS quantity.

- *Pek* amplitude is the height of an AC waveform as measured from theero mark to the highest positive or lowest negative point on a graph. Also known as thee amplitude of a wave.

- *Pek-o-pek* amplitude is the total height of an AC waveform as measured from maximum positive to maximum negative peaks on a graph. Often abbreviated as P-P .

- *A ee* amplitude is the mathemati cal mean of all positive or all negative points on a waveform graph.

- RMS stands for *Roo Men Sque*, and is a way of expressing an AC quantity of voltage or current in terms functionally equivalent to DC. For example, 10 volts AC RMS is the amount of voltage that would produce the same amount of heat dissipation across a resistor of given value as a 10 volt DC power supply. Also known as the equivalent or DC equivalent value of an AC voltage or current.

4 S p

Over the course of the next few chapters, you will learn that AC circuit measurements and calculations can get very complicated due to the complex nature of alternating current in circuits with inductance and capacitance. However, with simple circuits involving nothing more than an AC power source and resistance, the same laws and rules of DC apply simply and directly.

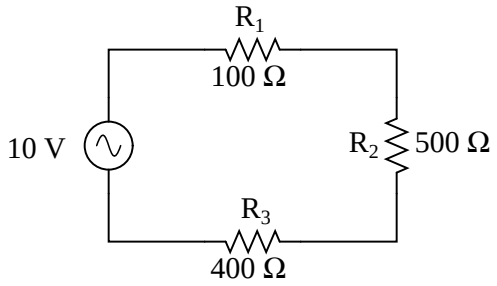

$$R_{total} = R_1 + R_2 + R_3$$

$$R_{total} = 1\ k\Omega$$

$$I_{total} = \frac{E_{total}}{R_{total}}$$

$$I_{total} = \frac{10\ V}{1\ k\Omega}$$

$$I_{total} = 10\ mA$$

$$E_{R1} = I_{total}R_1 \qquad E_{R2} = I_{total}R_2 \qquad E_{R3} = I_{total}R_3$$

$$E_{R1} = 1\ V \qquad E_{R2} = 5\ V \qquad E_{R3} = 4\ V$$

Series resistances still add, parallel resistances still diminish, and the Laws of Kirchho and Ohm still hold true. Actually, as we will discover later on, these rules and laws hold true, it s just that we have to express the quantities of voltage, current, and opposition to current in more advanced mathematical forms. With purely resistive circuits, however, these complexities of AC are of no practical consequence, and so we can treat the numbers as though we were dealing with simple DC quantities.

Because all these mathematical relationships still hold true, we can make use of our familiar table method of organi ing circuit values just as with DC:

	R_1	R_2	R_3	Total	
E	1	5	4	10	Volts
I	10m	10m	10m	10m	Amps
R	100	500	400	1k	Ohms

One major caveat needs to be given here: all measurements of AC voltage and current must be expressed in the same terms (peak, peak-to-peak, average, or RMS). If the source voltage is given in peak AC volts, then all currents and voltages subsequently calculated are cast in terms of peak units. If the source voltage is given in AC RMS volts, then all calculated currents and voltages are cast in AC RMS units as well. This holds true for *n* calculation based on Ohm s Laws, Kirchho s Laws, etc. Unless otherwise stated, all values of voltage and current in AC circuits are generally assumed to be RMS rather than peak, average, or peak-to-peak. In some areas of electronics, peak measurements are assumed, but in most applications (especially industrial electronics) the assumption is RMS.

- **RE IE**
- All the old rules and laws of DC (Kirchho s oltage and Current Laws, Ohm s Law) still hold

true for AC. However, with more complex circuits, we may need to represent the AC quantities in more complex form. More on this later, I promise

- The table method of organi ing circuit values is still a valid analysis tool for AC circuits.

5 p

Things start to get complicated when we need to relate two or more AC voltages or currents that are out of step with each other. By out of step, I mean that the two waveforms are not synchroni ed: that their peaks andero points do not mat ch up at the same points in time. The following graph illustrates an example of this:

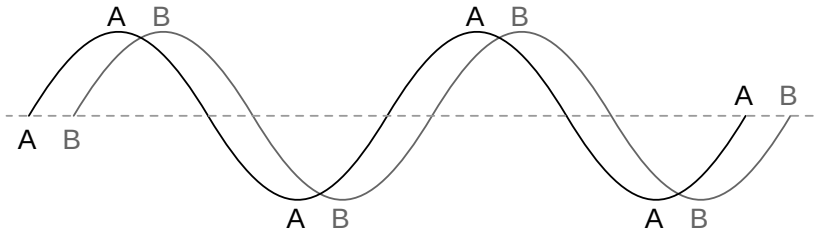

The two waves shown above (A versus B) are of the same amplitude and frequency, but they are out of step with each other. In technical terms, this is called a *pe i f.* Earlier we saw how we could plot a sine wave by calculating the trigonometric sine function for angles ranging from 0 to0 degrees, a full circle. The starting point of a sine wave wasero amplitude atero degrees, progressing to full positive amplitude at0 degrees, ero at 10 degrees, full negative at 20 degrees, and back to the starting point ofero at0 degrees. We can use this angle scale along the hori ontal axis of our waveform plot to express just how far out of step one wave is with another:

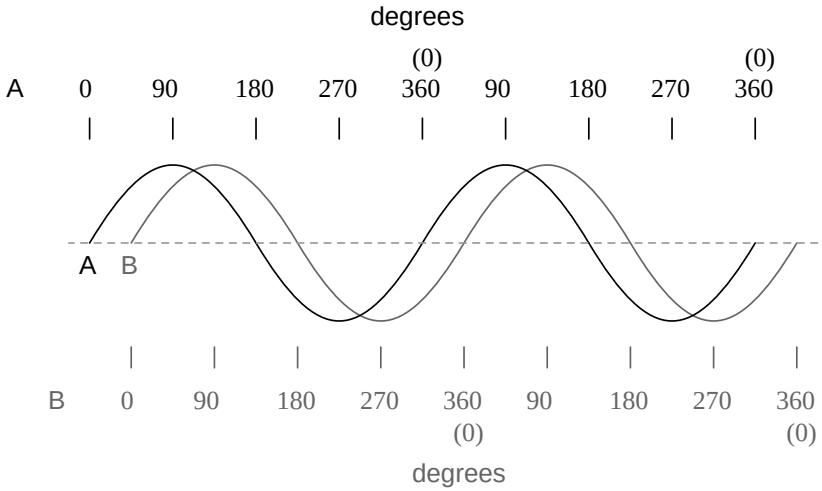

The shift between these two waveforms is about d egrees, the A" wave being ahead of the "B" wave. A sampling of different phase shifts is given in the following graphs to better illustrate this concept:

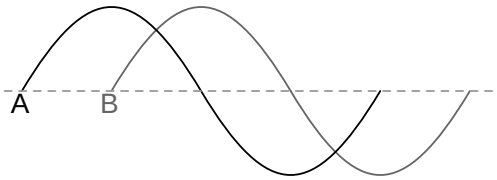

Phase shift = 90 degrees
A is ahead of B
(A "leads" B)

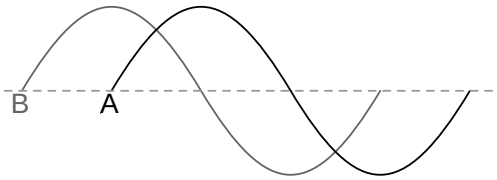

Phase shift = 90 degrees
B is ahead of A
(B "leads" A)

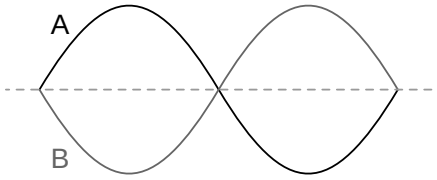

Phase shift = 180 degrees
A and B waveforms are
mirror-images of each other

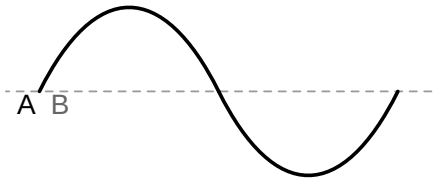

Phase shift = 0 degrees
A and B waveforms are
in perfect step with each other

Because the waveforms in the above examples are at the same frequency, they will be out of step by the same angular amount at every point in time. For this reason, we can express phase shift for two or more waveforms of the same frequency as a constant quantity for the entire wave, and not just an expression of shift between any two particular points along the waves. That is, it is safe to say something like, "voltage A is 45 degrees out of phase with voltage B." Whichever waveform is ahead in its evolution is said to be *ein* and the one behind is said to be *in* .

Phase shift, like voltage, is always a measurement relative between two things. There s really no such thing as a waveform with an *bo ue* phase measurement because there s no known universal reference for phase. Typically in the analysis of AC circuits, the voltage waveform of the power supply is used as a reference for phase, that voltage stated as "xxx volts at 0 degrees." Any other AC voltage or current in that circuit will have its phase shift expressed in terms relative to that source voltage.

This is what makes AC circuit calculations more complicated than DC. When applying Ohm s Law and Kirchhoff s Laws, quantities of AC voltage and current must re ect phase shift as well as amplitude. Mathematical operations of addition, subtraction, multiplication, and division must operate on these quantities of phase shift as well as amplitude. Fortunately, there is a mathematical system of quantities called*o yex nu be* ideally suited for this task of representing amplitude and phase.

Because the subject of complex numbers is so essential to the understanding of AC circuits, the

next chapter will be devoted to that subject alone.

- **REVIEW**
- *P ei f* is where two or more waveforms are out of step with each other.
- The amount of phase shift between two waves can be expressed in terms of degrees, as defined by the degree units on the hori ontal axis of the waveform graph used in plotting the trigonometric sine function.
- A *ein* waveform is defined as one waveform that is ahead of another in its evolution. A *in* waveform is one that is behind another. Example:

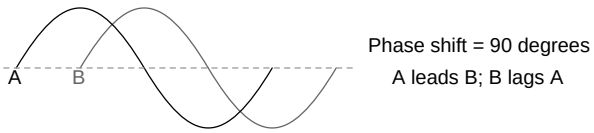

- Calculations for AC circuit analysis must take into consideration both amplitude and phase shift of voltage and current waveforms to be completely accurate. This requires the use of a mathematical system called *complex numbers*.

1.6 Principles of radio

One of the more fascinating applications of electricity is in the generation of invisible ripples of energy called *radio waves*. The limited scope of this lesson on alternating current does not permit full exploration of the concept, some of the basic principles will be covered.

With Oersted's accidental discovery of electromagnetism, it was realized that electricity and magnetism were related to each other. When an electric current was passed through a conductor, a magnetic field was generated perpendicular to the axis of flow. Likewise, if a conductor was exposed to a change in magnetic flux perpendicular to the conductor, a voltage was produced along the length of that conductor. So far, scientists knew that electricity and magnetism always seemed to affect each other at right angles. However, a major discovery lay hidden just beneath this seemingly simple concept of related perpendicularity, and its unveiling was one of the pivotal moments in modern science.

This breakthrough in physics is hard to overstate. The man responsible for this conceptual revolution was the Scottish physicist James Clerk Maxwell (1831-1879), who "unified" the study of electricity and magnetism in four relatively tidy equations. In essence, what he discovered was that electric and magnetic *fields* were intrinsically related to one another, with or without the presence of a conductive path for electrons to flow. Stated more formally, Maxwell's discovery was this:

A changing electric field produces a perpendicular magnetic field, and

A changing magnetic field produces a perpendicular electric field.

All of this can take place in open space, the alternating electric and magnetic fields supporting each other as they travel through space at the speed of light. This dynamic structure of electric and magnetic fields propagating through space is better known as an *electromagnetic wave*.

There are many kinds of natural radiative energy composed of electromagnetic waves. Even light is electromagnetic in nature. So are X-rays and "gamma" ray radiation. The only difference between these kinds of electromagnetic radiation is the frequency of their oscillation (alternation of the electric and magnetic fields back and forth in polarity). By using a source of AC voltage and a special device called an *antenna*, we can create electromagnetic waves (of a much lower frequency than that of light) with ease.

An antenna is nothing more than a device built to produce a dispersing electric or magnetic field. Two fundamental types of antennae are the *dipole* and the *loop*:

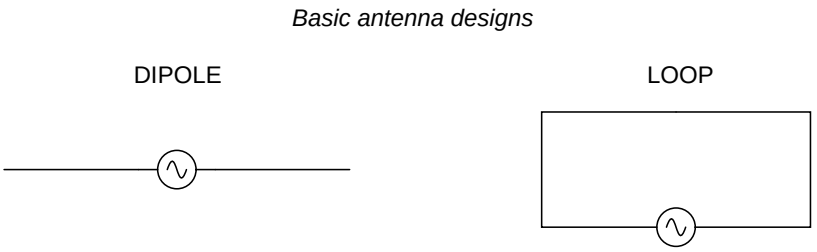

While the dipole looks like nothing more than an open circuit, and the loop a short circuit, these pieces of wire are effective radiators of electromagnetic fields when connected to AC sources of the proper frequency. The two open wires of the dipole act as a sort of capacitor (two conductors separated by a dielectric), with the electric field open to dispersal instead of being concentrated between two closely-spaced plates. The closed wire path of the loop antenna acts like an inductor with a large air core, again providing ample opportunity for the field to disperse away from the antenna instead of being concentrated and contained as in a normal inductor.

As the powered dipole radiates its changing electric field into space, a changing magnetic field is produced at right angles, thus sustaining the electric field further into space, and so on as the wave propagates at the speed of light. As the powered loop antenna radiates its changing magnetic field into space, a changing electric field is produced at right angles, with the same end-result of a continuous electromagnetic wave sent away from the antenna. Either antenna achieves the same basic task: the controlled production of an electromagnetic field.

When attached to a source of high-frequency AC power, an antenna acts as a *transmitting* device, converting AC voltage and current into electromagnetic wave energy. Antennas also have the ability to intercept electromagnetic waves and convert their energy into AC voltage and current. In this mode, an antenna acts as a *receiving* device:

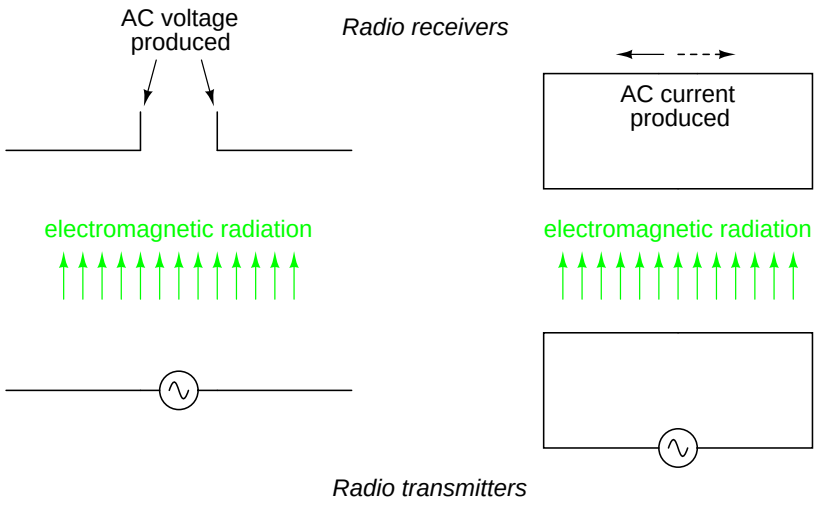

While there is *much* more that can be said about antenna technology, this brief introduction is enough to give you the general idea of what's going on (and perhaps enough information to provoke a few experiments).

- **REVIEW:**
- James Maxwell discovered that changing electric fields produce perpendicular magnetic fields, and visa-versa, even in empty space.
- A twin set of electric and magnetic fields, oscillating at right angles to each other and traveling at the speed of light, constitutes an *electromagnetic wave*.
- An *antenna* is a device made of wire, designed to radiate a changing electric field or changing magnetic field when powered by a high-frequency AC source, or intercept an electromagnetic field and convert it to an AC voltage or current.
- The *dipole* antenna consists of two pieces of wire (not touching), primarily generating an electric field when energized, and secondarily producing a magnetic field in space.
- The *loop* antenna consists of a loop of wire, primarily generating a magnetic field when energized, and secondarily producing an electric field in space.

Chapter 2

COMPLEX NUMBERS

2.1 Introduction

If I needed to describe the distance between two cities, I could provide an answer consisting of a single number in miles, kilometers, or some other unit of linear measurement. However, if I were to describe how to travel from one city to another, I would have to provide more information than just the distance between those two cities; I would also have to provide information about the *direction* to travel, as well.

The kind of information that expresses a single dimension, such as linear distance, is called a *scalar* quantity in mathematics. Scalar numbers are the kind of numbers you've used in most all of your mathematical applications so far. The voltage produced by a battery, for example, is a scalar quantity. So is the resistance of a piece of wire (ohms), or the current through it (amps).

However, when we begin to analyze alternating current circuits, we find that quantities of voltage, current, and even resistance (called *impedance* in AC) are not the familiar one-dimensional quantities we're used to measuring in DC circuits. Rather, these quantities, because they're dynamic (alternating in direction and amplitude), possess other dimensions that must be taken into account. Frequency and phase shift are two of these dimensions that come into play. Even with relatively simple AC circuits, where we're only dealing with a single frequency, we still have the dimension of phase shift to contend with in addition to the amplitude.

In order to successfully analyze AC circuits, we need to work with mathematical objects and techniques capable of representing these multi-dimensional quantities. Here is where we need to abandon scalar numbers for something better suited: *complex numbers*. Just like the example of giving directions from one city to another, AC quantities in a single-frequency circuit have both amplitude (analogy: distance) and phase shift (analogy: direction). A complex number is a single mathematical quantity able to express these two dimensions of amplitude and phase shift at once.

Complex numbers are easier to grasp when they're represented graphically. If I draw a line with a certain length (magnitude) and angle (direction), I have a graphic representation of a complex number which is commonly known in physics as a *vector*:

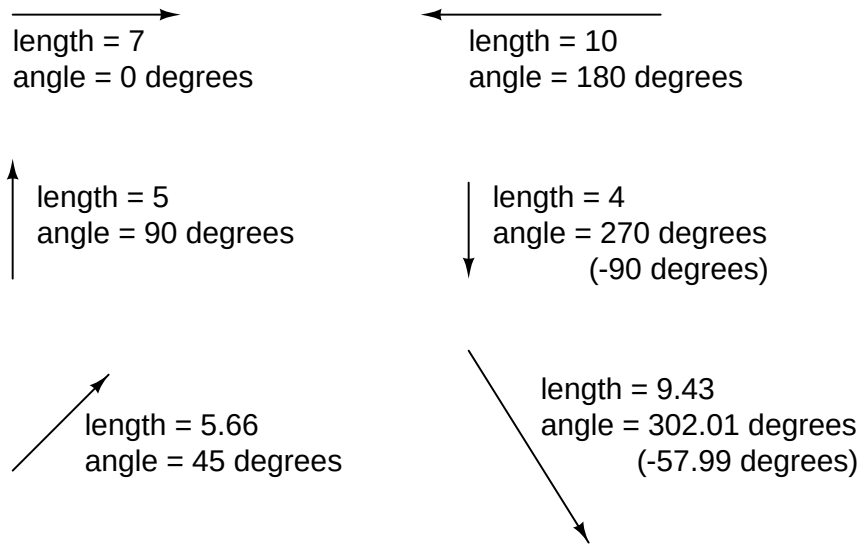

Like distances and directions on a map, there must be some common frame of reference for angle figures to have any meaning. In this case, directly right is considered to be 0°, and angles are counted in a positive direction going counter-clockwise:

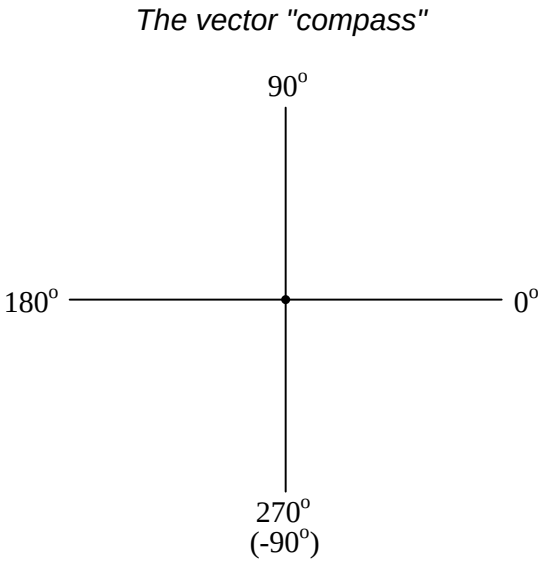

The idea of representing a number in graphical form is nothing new. We all learned this in grade school with the "number line:"

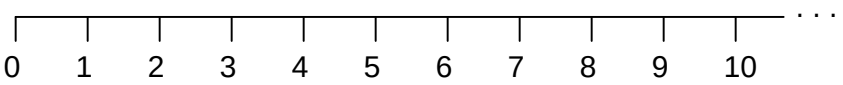

We even learned how addition and subtraction works by seeing how lengths (magnitudes) stacked

up to give a final answer:

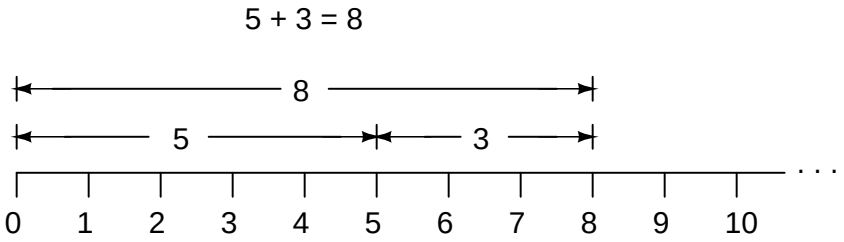

Later, we learned that there were ways to designate the values *between* the whole numbers marked on the line. These were fractional or decimal quantities:

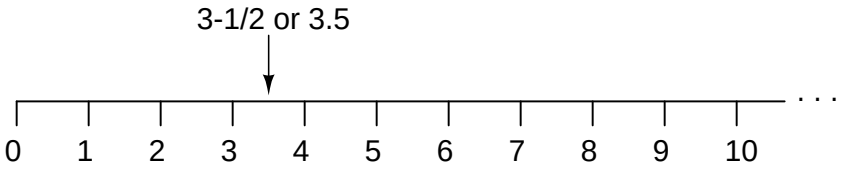

Later yet we learned that the number line could extend to the left of zero as well:

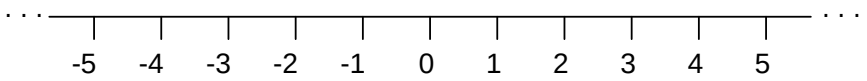

These fields of numbers (whole, integer, rational, irrational, real, etc.) learned in grade school share a common trait: they're all *one-dimensional*. The straightness of the number line illustrates this graphically. You can move up or down the number line, but all "motion" along that line is restricted to a single axis (horizontal). One-dimensional, scalar numbers are perfectly adequate for counting beads, representing weight, or measuring DC battery voltage, but they fall short of being able to represent something more complex like the distance *and* direction between two cities, or the amplitude *and* phase of an AC waveform. To represent these kinds of quantities, we need multidimensional representations. In other words, we need a number line that can point in different directions, and that's exactly what a vector is.

- **REVIEW:**

- A *scalar* number is the type of mathematical object that people are used to using in everyday life: a one-dimensional quantity like temperature, length, weight, etc.

- A *complex number* is a mathematical quantity representing two dimensions of magnitude and direction.

- A *vector* is a graphical representation of a complex number. It looks like an arrow, with a starting point, a tip, a definite length, and a definite direction. Sometimes the word *phasor* is used in electrical applications where the angle of the vector represents phase shift between waveforms.

2.2 Vectors and AC waveforms

Okay, so how exactly can we represent AC quantities of voltage or current in the form of a vector? The length of the vector represents the magnitude (or amplitude) of the waveform, like this:

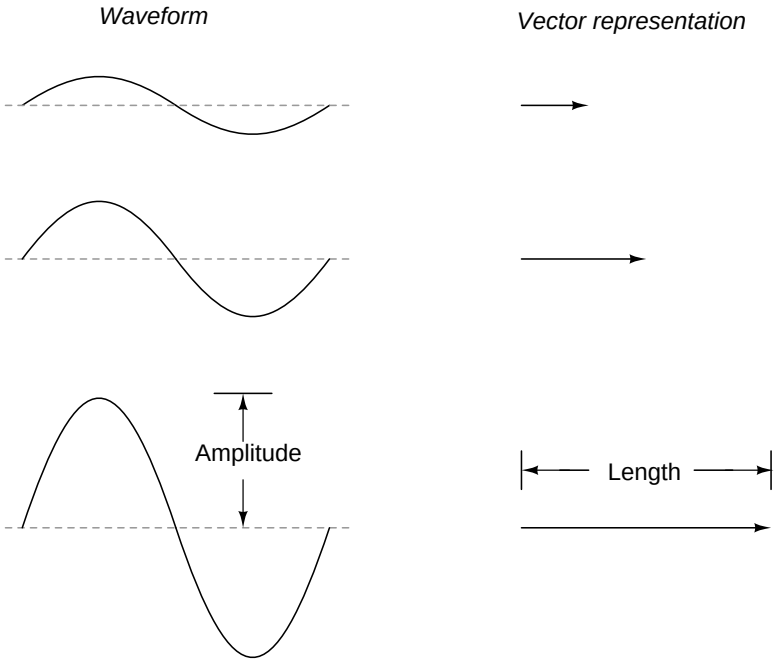

The greater the amplitude of the waveform, the greater the length of its corresponding vector. The angle of the vector, however, represents the phase shift in degrees between the waveform in question and another waveform acting as a "reference" in time. Usually, when the phase of a waveform in a circuit is expressed, it is referenced to the power supply voltage waveform (arbitrarily stated to be "at" 0°). Remember that phase is always a *relative* measurement between two waveforms rather than an absolute property.

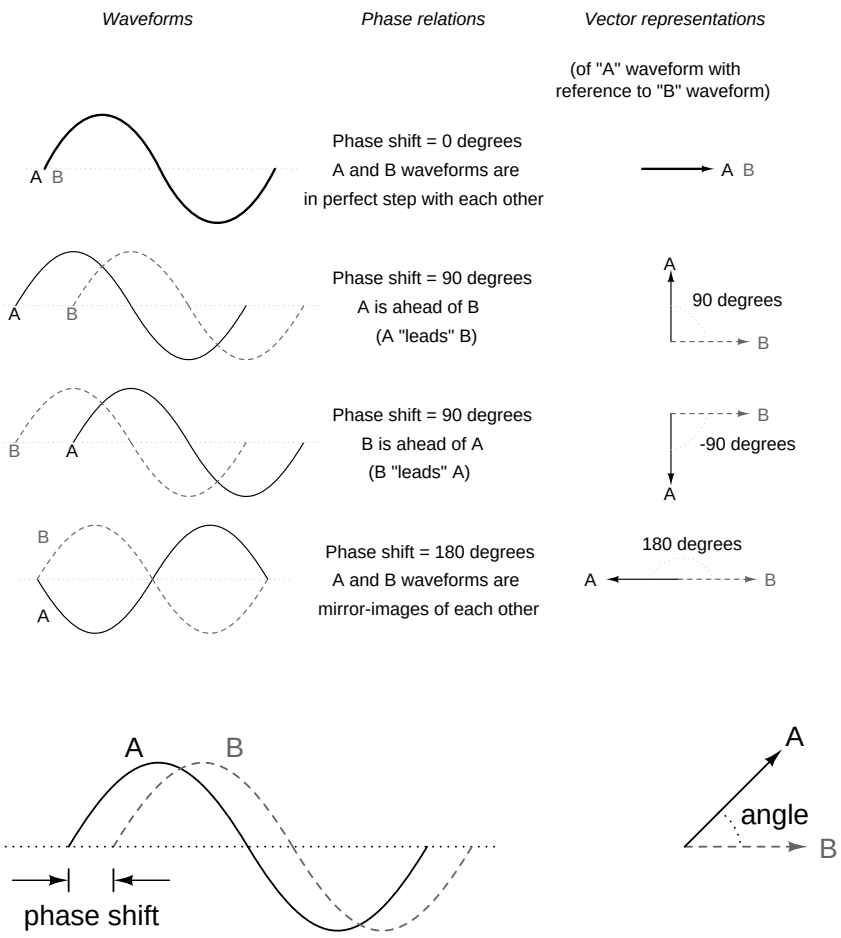

The greater the phase shift in degrees between two waveforms, the greater the angle difference between the corresponding vectors. Being a relative measurement, like voltage, phase shift (vector angle) only has meaning in reference to some standard waveform. Generally this "reference" waveform is the main AC power supply voltage in the circuit. If there is more than one AC voltage source, then one of those sources is arbitrarily chosen to be the phase reference for all other measurements in the circuit.

This concept of a reference point is not unlike that of the "ground" point in a circuit for the benefit of voltage reference. With a clearly defined point in the circuit declared to be "ground," it becomes possible to talk about voltage "on" or "at" single points in a circuit, being understood that those voltages (always relative between *two* points) are referenced to "ground." Correspondingly, with a clearly defined point of reference for phase it becomes possible to speak of voltages and currents in an AC circuit having definite phase angles. Example: "the current through resistor R_5 is 24.3 milliamps at -64 degrees," which means the current waveform lags 64° behind the main source voltage waveform.

- **REVIEW:**

- When used to describe an AC quantity, the length of a vector represents the amplitude of the wave while the angle of a vector represents the phase angle of the wave relative to some other (reference) waveform.

2.3 Simple vector addition

Remember that vectors are mathematical objects just like numbers on a number line: they can be added, subtracted, multiplied, and divided. Addition is perhaps the easiest vector operation to visualize, so we'll begin with that. If vectors with common angles are added, their magnitudes (lengths) add up just like regular scalar quantities:

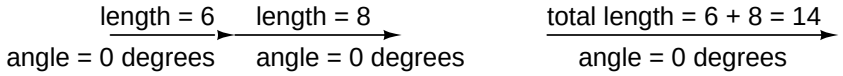

Similarly, if AC voltage sources with the same phase angle are connected together in series, their voltages add just as you might expect with DC batteries:

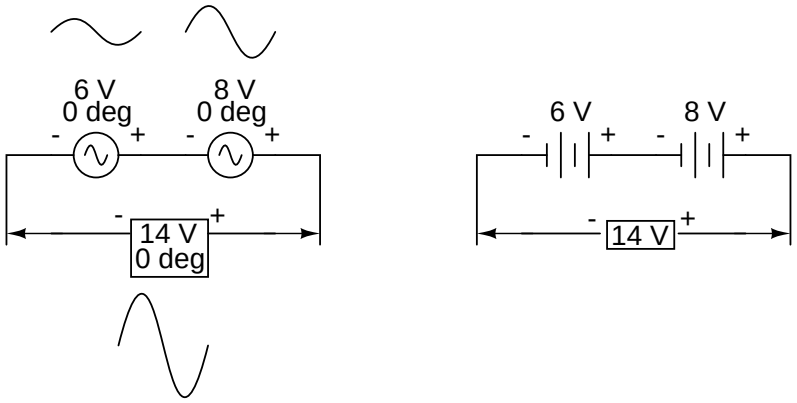

Please note the (+) and (-) polarity marks next to the leads of the two AC sources. Even though we know AC doesn't have "polarity" in the same sense that DC does, these marks are essential to knowing how to reference the given phase angles of the voltages. This will become more apparent in the next example.

If vectors directly opposing each other (180° out of phase) are added together, their magnitudes (lengths) subtract just like positive and negative scalar quantities subtract when added:

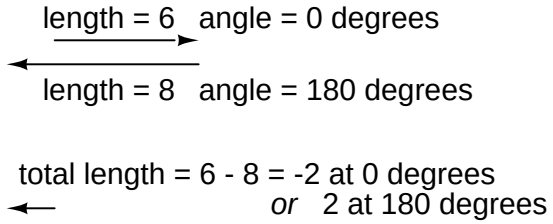

Similarly, if opposing AC voltage sources are connected in series, their voltages subtract as you might expect with DC batteries connected in an opposing fashion:

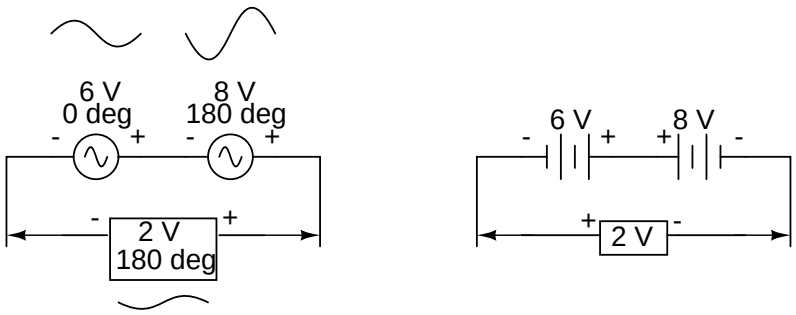

Determining whether or not these voltage sources are opposing each other requires an examination of their polarity markings *and* their phase angles. Notice how the polarity markings in the above diagram seem to indicate additive voltages (from left to right, we see - and + on the 6 volt source, - and + on the 8 volt source). Even though these polarity markings would normally indicate an *additive* effect in a DC circuit (the two voltages working together to produce a greater total voltage), in this AC circuit they're actually pushing in opposite directions because one of those voltages has a phase angle of 0° and the other a phase angle of 180°. The result, of course, is a total voltage of 2 volts.

We could have just as well shown the opposing voltages subtracting in series like this:

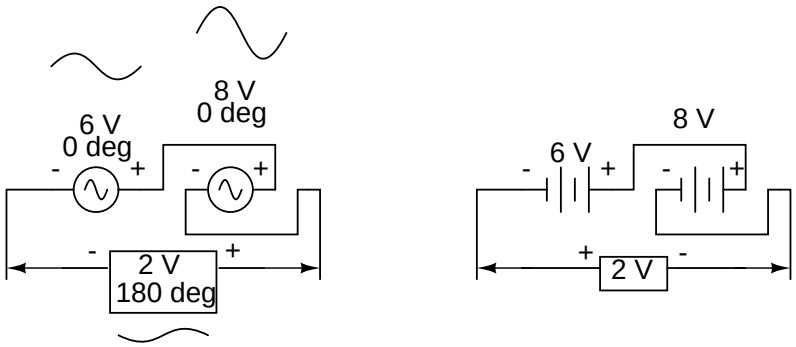

Note how the polarities appear to be opposed to each other now, due to the reversal of wire connections on the 8 volt source. Since both sources are listed as having equal phase angles (0°), they truly are opposed to one another, and the overall effect is the same as the former scenario with "additive" polarities and differing phase angles: a total voltage of only 2 volts.

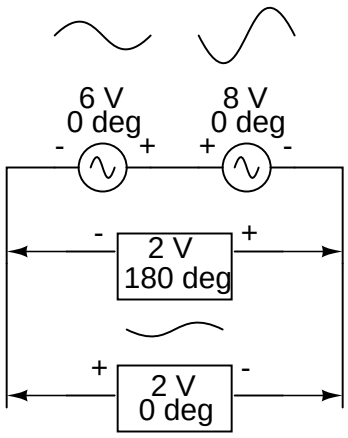

Just as there are two ways to express the phase of the sources, there are two ways to express their resultant sum.

The resultant voltage can be expressed in two different ways: 2 volts at 180° with the (-) symbol on the left and the (+) symbol on the right, or 2 volts at 0° with the (+) symbol on the left and the (-) symbol on the right. A reversal of wires from an AC voltage source is the same as phase-shifting that source by 180°.

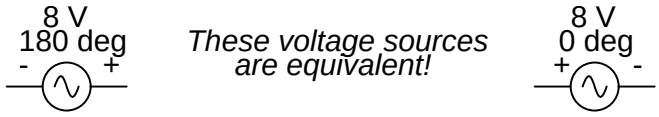

2.4 A word on AC "polarity"

Polarity markings within AC circuit schematics, and how these markings relate to phase angles, is a potentially confusing subject. A few illustrations may help to clarify the issue.

Remember this important rule: phase is a *relative* measurement, the amount of shift always being referenced to one particular waveform in a circuit. A waveform by itself really doesn't have a phase. It is only when we compare it with other waveforms that we can same anything meaningful about "its phase." And when we reference to a waveform, we must make sure we know *which end* of that waveform's source is serving as the reference point. Polarity marks on AC voltage sources exist simply to provide a frame of reference for phase angles, rather than to actually denote polarity of a real voltage.

This is analogous to the polarity-marking of DC voltmeter test leads by color: red and black. In electronics work, red typically represents "positive" and black typically represents "negative." Does this mean that the red test lead on a voltmeter will *always* be connected to the positive side of a voltage source and the black test lead *always* connected to the negative? Of course not! Whoever uses the voltmeter is free to connect it across a voltage source however they please. What the test lead colors do is provide a *frame of reference* for the mathematical sign of the displayed voltage

figure, so that the meter user knows what a negative or positive indication really means in relation to actual circuit polarity:

Test lead colors provide a frame of reference *for interpreting the sign (+ or -) of the meter's indication.*

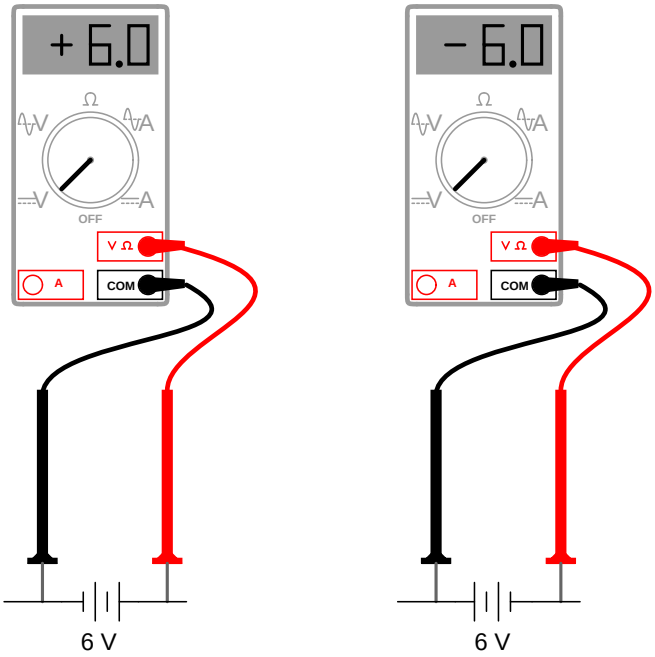

Likewise, (+) and (-) polarity markings for an AC voltage source are given simply to provide a frame of reference for interpreting that source's stated phase angle. Another illustration may help in understanding this. Suppose that two unlabeled DC voltage sources are connected together in series, and we want to try to determine what the total resultant voltage is by reading the voltage across each one (individually) with a voltmeter, then either adding or subtracting mathematically to find the answer. First, we would measure the voltage of one source:

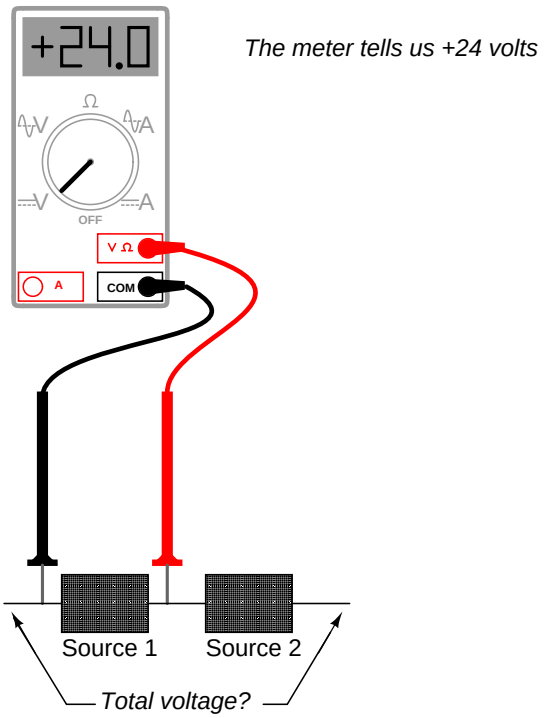

The meter tells us +24 volts

This first measurement of +24 across the left-hand voltage source tells us that the black lead of the meter really is touching the negative side of voltage source #1, and the red lead of the meter really is touching the positive. Thus, we know source #1 is a battery facing in this orientation:

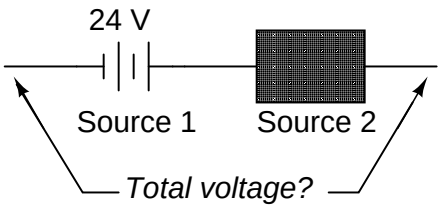

Measuring the other unknown voltage source:

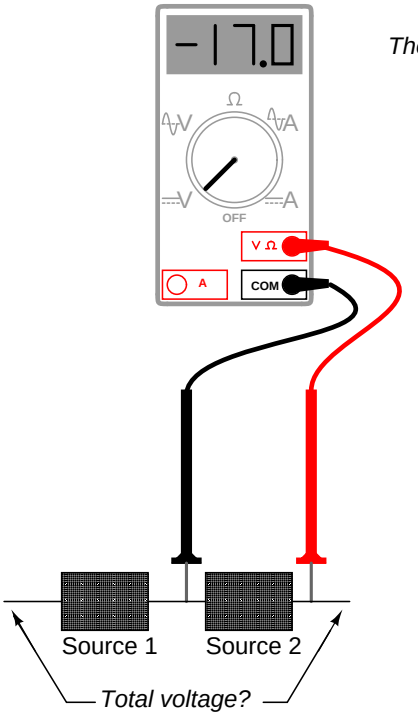

The meter tells us -17 volts

This second voltmeter reading, however, is a *negative* (-) 17 volts, which tells us that the black test lead is actually touching the positive side of voltage source #2, while the red test lead is actually touching the negative. Thus, we know that source #2 is a battery facing in the *opposite* direction:

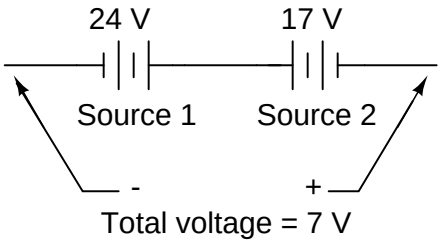

Only after correlating voltmeter readings with test lead orientation can we determine that these two voltage sources are opposing each other, resulting in a total voltage of 7 volts (24 volts - 17 volts).

The positive (+) and negative (-) polarity markings associated with an AC voltage source serve the same purpose as the red and black colors of a DC voltmeter's test leads. If there was such a thing as a "phasemeter" that could directly indicate phase angle (it would require a second AC voltage source to act as a reference in time), it could provide two different indications of phase angle while measuring the waveform of the same AC source, depending on how we connected the test leads:

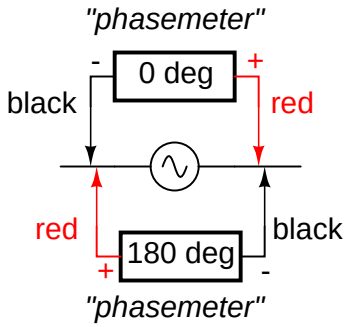

So, when you see an AC voltage designated as such . . .

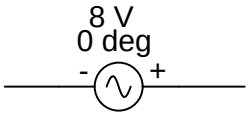

. . . it means that our hypothetical "phasemeter" would read 0° phase shift with its "negative" (black) test lead touching the left wire and its "positive" (red) test test lead touching the right wire, the (+) and (-) symbols merely providing a frame of reference for the phase angle figure. It would also be perfectly okay to represent that very same source's phase like this (notice the switch in polarity markings):

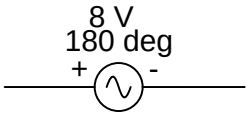

2.5 Complex vector addition

If vectors with uncommon angles are added, their magnitudes (lengths) add up quite differently than that of scalar magnitudes:

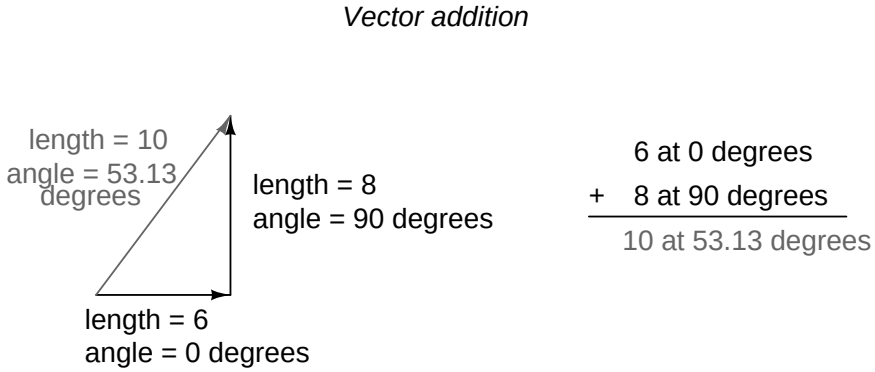

If two AC voltages – 90° out of phase – are added together by being connected in series, their voltage magnitudes do not directly add or subtract as with scalar voltages in DC. Instead, these

voltage quantities are complex quantities, and just like the above vectors, which add up in a trigonometric fashion, a 6 volt source at 0° added to an 8 volt source at 90° results in 10 volts at a phase angle of 53.13^o:

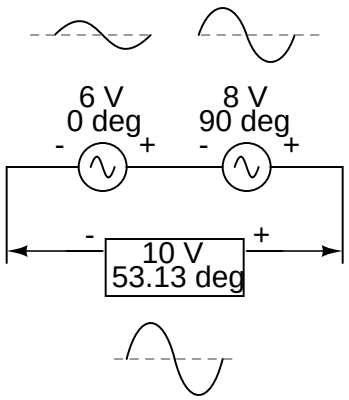

Compared to DC circuit analysis, this is very strange indeed. Note that it's possible to obtain voltmeter indications of 6 and 8 volts, respectively, across the two AC voltage sources, yet only read 10 volts for a total voltage!

There is no suitable DC analogy for what we're seeing here with two AC voltages slightly out of phase. DC voltages can only directly aid or directly oppose, with nothing in between. With AC, two voltages can be aiding or opposing one another *to any degree* between fully-aiding and fully-opposing, inclusive. Without the use of vector (complex number) notation to describe AC quantities, it would be *very* difficult to perform mathematical calculations for AC circuit analysis.

In the next section, we'll learn how to represent vector quantities in symbolic rather than graphical form. Vector and triangle diagrams suffice to illustrate the general concept, but more precise methods of symbolism must be used if any serious calculations are to be performed on these quantities.

- **REVIEW:**

- DC voltages can only either directly aid or directly oppose each other when connected in series. AC voltages may aid or oppose *to any degree* depending on the phase shift between them.

2.6 Polar and rectangular notation

In order to work with these complex numbers without drawing vectors, we first need some kind of standard mathematical notation. There are two basic forms of complex number notation: *polar* and *rectangular*.

Polar form is where a complex number is denoted by the *length* (otherwise known as the *magnitude*, *absolute value*, or *modulus*) and the *angle* of its vector (usually denoted by an angle symbol that looks like this: $\angle$). To use the map analogy, polar notation for the vector from New York City to San Diego would be something like "2400 miles, southwest." Here are two examples of vectors and their polar notations:

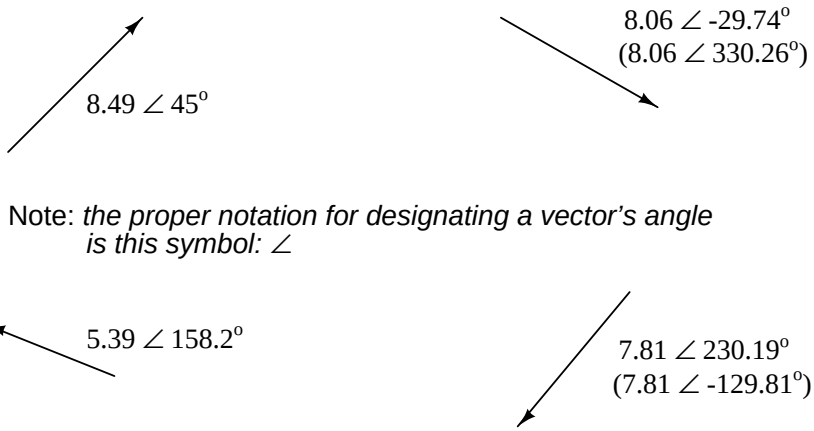

Note: *the proper notation for designating a vector's angle is this symbol:* ∠

Standard orientation for vector angles in AC circuit calculations defines 0° as being to the right (horizontal), making 90° straight up, 180° to the left, and 270° straight down. Please note that vectors angled "down" can have angles represented in polar form as positive numbers in excess of 180, or negative numbers less than 180. For example, a vector angled $\angle\ 270^o$ (straight down) can also be said to have an angle of -90°. The above vector on the right ($5.4 \angle 326^o$) can also be denoted as $5.4 \angle -34^o$.

The vector "compass"

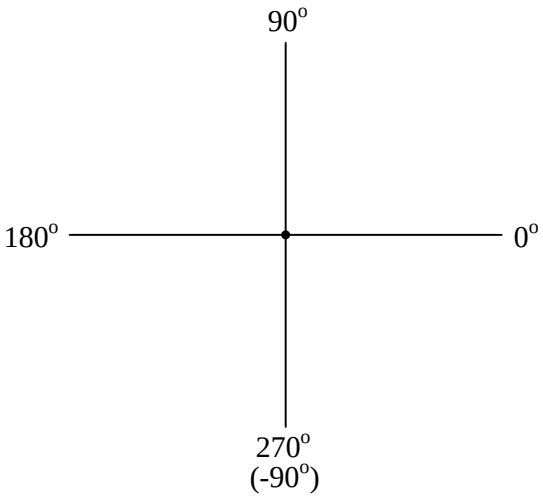

Rectangular form, on the other hand, is where a complex number is denoted by its respective horizontal and vertical components. In essence, the angled vector is taken to be the hypotenuse of a right triangle, described by the lengths of the adjacent and opposite sides. Rather than describing a vector's length and direction by denoting magnitude and angle, it is described in terms of "how far left/right" and "how far up/down."

These two dimensional figures (horizontal and vertical) are symbolized by two numerical figures. In order to distinguish the horizontal and vertical dimensions from each other, the vertical is prefixed

with a lower-case "i" (in pure mathematics) or "j" (in electronics). These lower-case letters do not represent a physical variable (such as instantaneous current, also symbolized by a lower-case letter "i"), but rather are mathematical "operators" used to distinguish the vector's vertical component from its horizontal component. As a complete complex number, the horizontal and vertical quantities are written as a sum:

In "rectangular" form, a vector's length and direction are denoted in terms of its horizontal and vertical span, the first number representing the horixontal ("real") and the second number (with the "j" prefix) representing the vertical ("imaginary") dimensions.

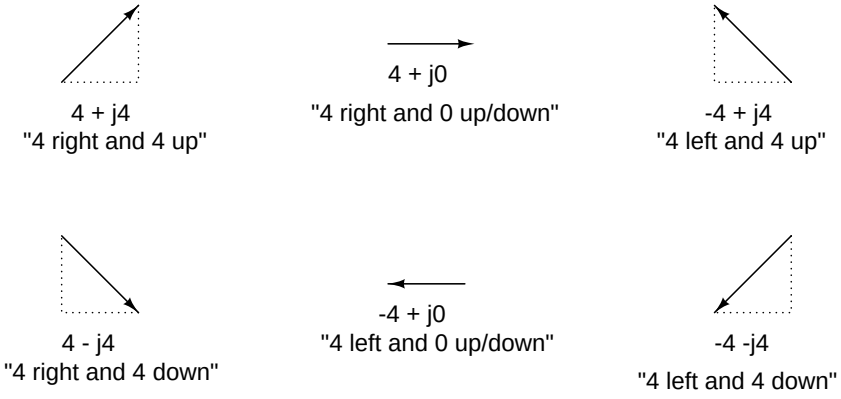

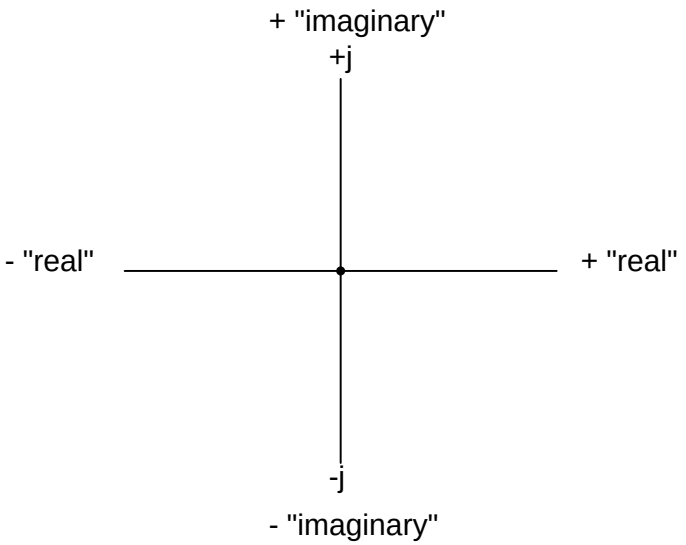

The horizontal component is referred to as the *real* component, since that dimension is compatible with normal, scalar ("real") numbers. The vertical component is referred to as the *imaginary* component, since that dimension lies in a different direction, totally alien to the scale of the real

numbers.

The "real" axis of the graph corresponds to the familiar number line we saw earlier: the one with both positive and negative values on it. The "imaginary" axis of the graph corresponds to another number line situated at 90° to the "real" one. Vectors being two-dimensional things, we must have a two-dimensional "map" upon which to express them, thus the two number lines perpendicular to each other:

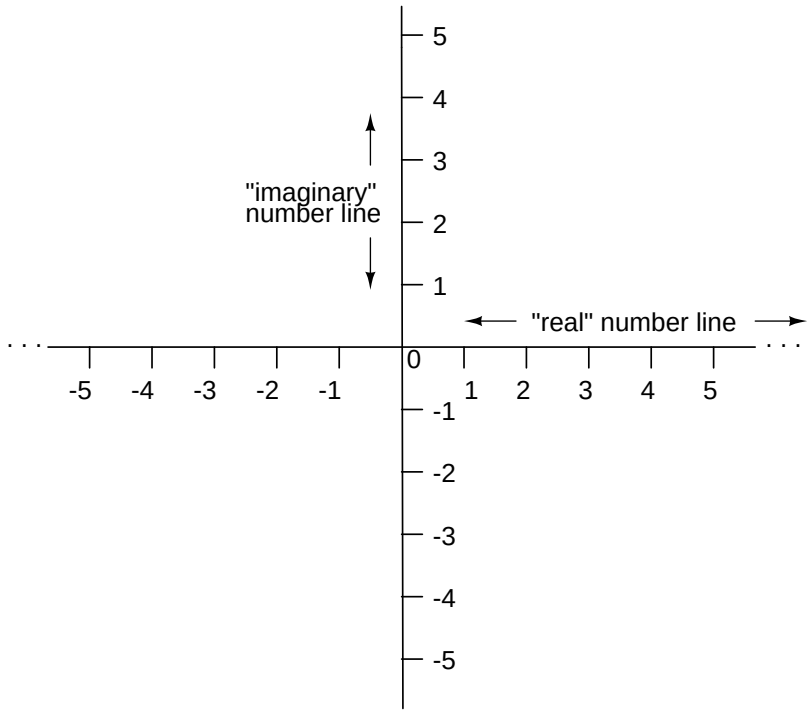

Either method of notation is valid for complex numbers. The primary reason for having two methods of notation is for ease of longhand calculation, rectangular form lending itself to addition and subtraction, and polar form lending itself to multiplication and division.

Conversion between the two notational forms involves simple trigonometry. To convert from polar to rectangular, find the real component by multiplying the polar magnitude by the cosine of the angle, and the imaginary component by multiplying the polar magnitude by the sine of the angle. This may be understood more readily by drawing the quantities as sides of a right triangle, the hypotenuse of the triangle representing the vector itself (its length and angle with respect to the horizontal constituting the polar form), the horizontal and vertical sides representing the "real" and "imaginary" rectangular components, respectively:

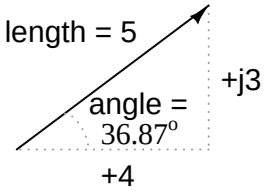

$5 \angle 36.87^{o}$ **(polar form)**

(5)(cos 36.87^{o}) = 4 (real component)

(5)(sin 36.87^{o}) = 3 (imaginary component)

$4 + j3$ **(rectangular form)**

To convert from rectangular to polar, find the polar magnitude through the use of the Pythagorean Theorem (the polar magnitude is the hypotenuse of a right triangle, and the real and imaginary components are the adjacent and opposite sides, respectively), and the angle by taking the arctangent of the imaginary component divided by the real component:

$4 + j3$ **(rectangular form)**

$c = \sqrt{a^2 + b^2}$ (pythagorean theorem)

polar magnitude = $\sqrt{4^2 + 3^2}$

polar magnitude = 5

polar angle = $\arctan \frac{3}{4}$

polar angle = 36.87^{o}

$5 \angle 36.87^{o}$ **(polar form)**

- **REVIEW:**
- *Polar* notation denotes a complex number in terms of its vector's length and angular direction from the starting point. Example: fly 45 miles $\angle$ 203° (West by Southwest).
- *Rectangular* notation denotes a complex number in terms of its horizontal and vertical dimensions. Example: drive 41 miles West, then turn and drive 18 miles South.

- In rectangular notation, the first quantity is the "real" component (horizontal dimension of vector) and the second quantity is the "imaginary" component (vertical dimension of vector). The imaginary component is preceded by a lower-case "j," sometimes called the "j operator."

- Both polar and rectangular forms of notation for a complex number can be related graphically in the form of a right triangle, with the hypotenuse representing the vector itself (polar form: hypotenuse length = magnitude; angle with respect to horizontal side = angle), the horizontal side representing the rectangular "real" component, and the vertical side representing the rectangular "imaginary" component.

2.7 Complex number arithmetic

Since complex numbers are legitimate mathematical entities, just like scalar numbers, they can be added, subtracted, multiplied, divided, squared, inverted, and such, just like any other kind of number. Some scientific calculators are programmed to directly perform these operations on two or more complex numbers, but these operations can also be done "by hand." This section will show you how the basic operations are performed. It is *highly* recommended that you equip yourself with a scientific calculator capable of performing arithmetic functions easily on complex numbers. It will make your study of AC circuit much more pleasant than if you're forced to do all calculations the longer way.

Addition and subtraction with complex numbers in rectangular form is easy. For addition, simply add up the real components of the complex numbers to determine the real component of the sum, and add up the imaginary components of the complex numbers to determine the imaginary component of the sum:

2 + j5	175 - j34	-36 + j10
+ 4 - j3	+ 80 - j15	+ 20 + j82
6 + j2	**255 - j49**	**-16 + j92**

When subtracting complex numbers in rectangular form, simply subtract the real component of the second complex number from the real component of the first to arrive at the real component of the difference, and subtract the imaginary component of the second complex number from the imaginary component of the first to arrive the imaginary component of the difference:

2 + j5	175 - j34	-36 + j10
- 4 - j3	- 80 - j15	- 20 + j82
-2 + j8	**95 - j19**	**-56 - j72**

For longhand multiplication and division, polar is the favored notation to work with. When multiplying complex numbers in polar form, simply *multiply* the polar magnitudes of the complex numbers to determine the polar magnitude of the product, and *add* the angles of the complex numbers to determine the angle of the product:

$$(35 \angle 65^o)(10 \angle -12^o) = \mathbf{350 \angle 53^o}$$

$$(124 \angle 250^o)(11 \angle 100^o) = \mathbf{1364 \angle -10^o} \quad \textit{or} \quad \mathbf{1364 \angle 350^o}$$

$$(3 \angle 30^o)(5 \angle -30^o) = \mathbf{15 \angle 0^o}$$

Division of polar-form complex numbers is also easy: simply divide the polar magnitude of the first complex number by the polar magnitude of the second complex number to arrive at the polar magnitude of the quotient, and subtract the angle of the second complex number from the angle of the first complex number to arrive at the angle of the quotient:

$$\frac{35 \angle 65^o}{10 \angle -12^o} = \mathbf{3.5 \angle 77^o}$$

$$\frac{124 \angle 250^o}{11 \angle 100^o} = \mathbf{11.273 \angle 150^o}$$

$$\frac{3 \angle 30^o}{5 \angle -30^o} = \mathbf{0.6 \angle 60^o}$$

To obtain the reciprocal, or "invert" (1/x), a complex number, simply divide the number (in polar form) into a scalar value of 1, which is nothing more than a complex number with no imaginary component (angle = 0):

$$\frac{1}{35 \angle 65^o} = \frac{1 \angle 0^o}{35 \angle 65^o} = \mathbf{0.02857 \angle -65^o}$$

$$\frac{1}{10 \angle -12^o} = \frac{1 \angle 0^o}{10 \angle -12^o} = \mathbf{0.1 \angle 12^o}$$

$$\frac{1}{0.0032 \angle 10^o} = \frac{1 \angle 0^o}{0.0032 \angle 10^o} = \mathbf{312.5 \angle -10^o}$$

These are the basic operations you will need to know in order to manipulate complex numbers in the analysis of AC circuits. Operations with complex numbers are by no means limited just to addition, subtraction, multiplication, division, and inversion, however. Virtually any arithmetic operation that can be done with scalar numbers can be done with complex numbers, including powers, roots, solving simultaneous equations with complex coefficients, and even trigonometric functions (although this involves a whole new perspective in trigonometry called *hyperbolic functions* which is well beyond the scope of this discussion). Be sure that you're familiar with the basic arithmetic operations of addition, subtraction, multiplication, division, and inversion, and you'll have little trouble with AC circuit analysis.

- **REVIEW:**

- To add complex numbers in rectangular form, add the real components and add the imaginary components. Subtraction is similar.

- To multiply complex numbers in polar form, multiply the magnitudes and add the angles. To divide, divide the magnitudes and subtract one angle from the other.

2.8 Some examples with AC circuits

Let's connect three AC voltage sources in series and use complex numbers to determine additive voltages. All the rules and laws learned in the study of DC circuits apply to AC circuits as well (Ohm's Law, Kirchhoff's Laws, network analysis methods), with the exception of power calculations. The only qualification is that all variables *must* be expressed in complex form, taking into account phase as well as magnitude, and all voltages and currents must be of the same frequency (in order that their phase relationships remain constant).

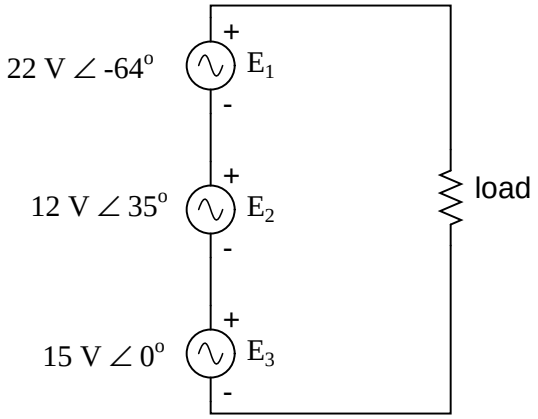

The polarity marks for all three voltage sources are oriented in such a way that their stated voltages should add to make the total voltage across the load resistor. Notice that although magnitude and phase angle is given for each AC voltage source, no frequency value is specified. If this is the case, it is assumed that all frequencies are equal, thus meeting our qualifications for applying DC rules to an AC circuit (all figures given in complex form, all of the same frequency). The setup of our equation to find total voltage appears as such:

$$E_{total} = E_1 + E_2 + E_3$$

$$E_{total} = (22\ V \angle -64^o) + (12\ V \angle 35^o) + (15\ V \angle 0^o)$$

Graphically, the vectors add up in this manner:

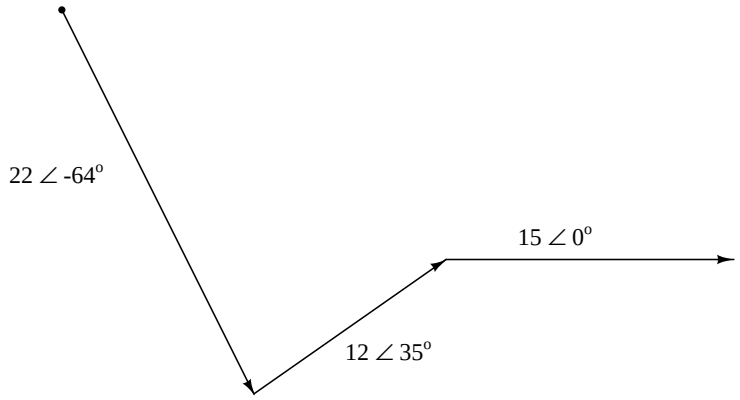

The sum of these vectors will be a resultant vector originating at the starting point for the 22 volt vector (dot at upper-left of diagram) and terminating at the ending point for the 15 volt vector (arrow tip at the middle-right of the diagram):

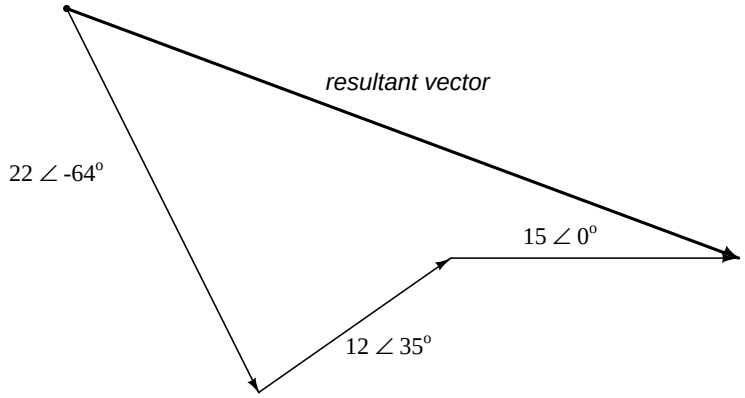

In order to determine what the resultant vector's magnitude and angle are without resorting to graphic images, we can convert each one of these polar-form complex numbers into rectangular form and add. Remember, we're *adding* these figures together because the polarity marks for the three voltage sources are oriented in an additive manner:

$15\ \text{V} \angle 0^{o} = 15 + j0\ \text{V}$

$12\ \text{V} \angle 35^{o} = 9.8298 + j6.8829\ \text{V}$

$22\ \text{V} \angle -64^{o} = 9.6442 - j19.7735\ \text{V}$

$$\begin{array}{rlr} & 15 & + j0 \quad \text{V} \\ & 9.8298 & + j6.8829\ \text{V} \\ + & 9.6442 & - j19.7735\ \text{V} \\ \hline & \mathbf{34.4740} & \mathbf{- j12.8906\ V} \end{array}$$

In polar form, this equates to 36.8052 volts $\angle$ -20.5018^{o}. What this means in real terms is that the voltage measured across these three voltage sources will be 36.8052 volts, lagging the 15 volt (0° phase reference) by 20.5018^{o}. A voltmeter connected across these points in a real circuit would only indicate the polar magnitude of the voltage (36.8052 volts), not the angle. An oscilloscope could be used to display two voltage waveforms and thus provide a phase shift measurement, but not a voltmeter. The same principle holds true for AC ammeters: they indicate the polar magnitude of the current, not the phase angle.

This is extremely important in relating calculated figures of voltage and current to real circuits. Although rectangular notation is convenient for addition and subtraction, and was indeed the final step in our sample problem here, it is not very applicable to practical measurements. Rectangular figures must be converted to polar figures (specifically polar *magnitude*) before they can be related to actual circuit measurements.

We can use SPICE to verify the accuracy of our results. In this test circuit, the 10 kΩ resistor value is quite arbitrary. It's there so that SPICE does not declare an open-circuit error and abort analysis. Also, the choice of frequencies for the simulation (60 Hz) is quite arbitrary, because resistors respond uniformly for all frequencies of AC voltage and current. There are other components (notably capacitors and inductors) which do not respond uniformly to different frequencies, but that is another subject!

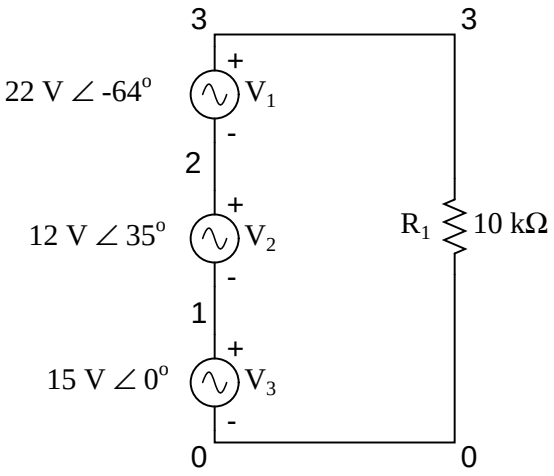


```
ac voltage addition
v1 1 0 ac 15 0 sin
v2 2 1 ac 12 35 sin
v3 3 2 ac 22 -64 sin
r1 3 0 10k
.ac lin 1 60 60            I'm using a frequency of 60 Hz
.print ac v(3,0) vp(3,0)   as a default value
.end
```

```
freq          v(3)        vp(3)
6.000E+01     3.681E+01  -2.050E+01
```

Sure enough, we get a total voltage of 36.81 volts ∠ -20.5^o (with reference to the 15 volt source, whose phase angle was arbitrarily stated at zero degrees so as to be the "reference" waveform).

At first glance, this is counter-intuitive. How is it possible to obtain a total voltage of just over 36 volts with 15 volt, 12 volt, and 22 volt supplies connected in series? With DC, this would be impossible, as voltage figures will either directly add or subtract, depending on polarity. But with AC, our "polarity" (phase shift) can vary anywhere in between full-aiding and full-opposing, and this allows for such paradoxical summing.

What if we took the same circuit and reversed one of the supply's connections? Its contribution to the total voltage would then be the opposite of what it was before:

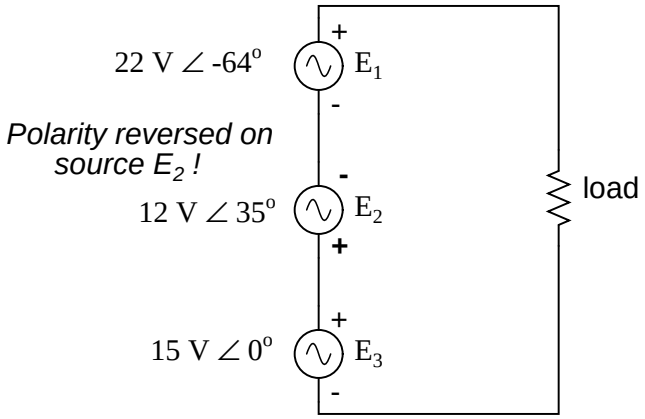

Note how the 12 volt supply's phase angle is still referred to as 35°, even though the leads have been reversed. Remember that the phase angle of any voltage drop is stated in reference to its noted polarity. Even though the angle is still written as 35°, the vector will be drawn 180° opposite of what it was before:

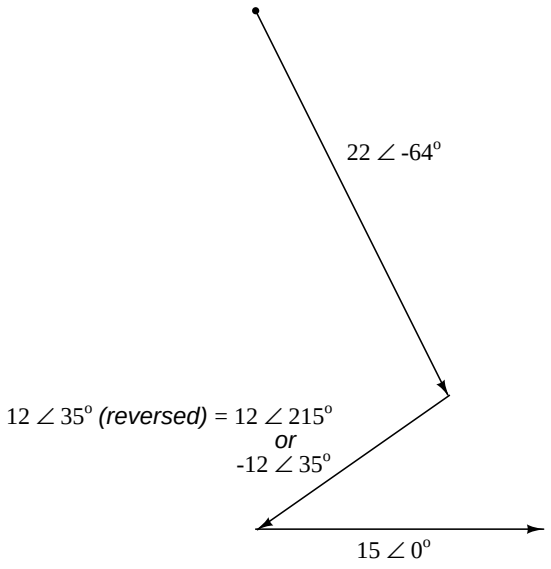

The resultant (sum) vector should begin at the upper-left point (origin of the 22 volt vector) and terminate at the right arrow tip of the 15 volt vector:

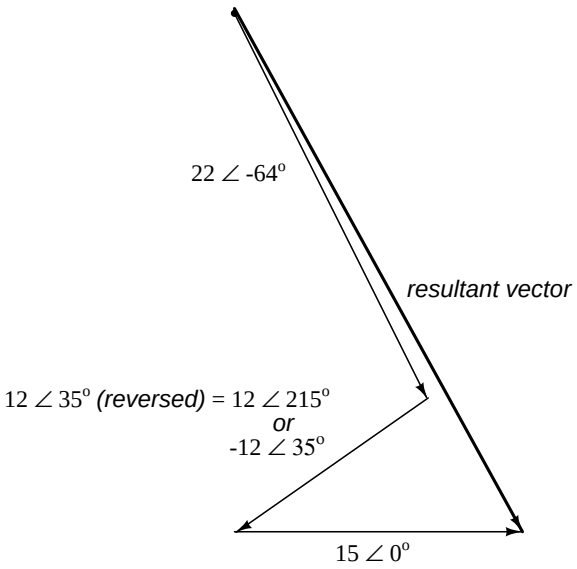

The connection reversal on the 12 volt supply can be represented in two different ways in polar form: by an addition of 180° to its vector angle (making it 12 volts $\angle$ 215°), or a reversal of sign on the magnitude (making it -12 volts $\angle$ 35°). Either way, conversion to rectangular form yields the same result:

$$12\ \text{V} \angle 35^\circ \ \textit{(reversed)} = 12\ \text{V} \angle 215^\circ = \mathbf{-9.8298 - j6.8829\ V}$$

or

$$-12\ \text{V} \angle 35^\circ = \mathbf{-9.8298 - j6.8829\ V}$$

The resulting addition of voltages in rectangular form, then:

$$\begin{array}{r} 15 + j0\ \text{V} \\ -9.8298 - j6.8829\ \text{V} \\ +\ 9.6442 - j19.7735\ \text{V} \\ \hline \mathbf{14.8143 - j26.6564\ V} \end{array}$$

In polar form, this equates to 30.4964 V $\angle$ -60.9368^o. Once again, we will use SPICE to verify the results of our calculations:

```
ac voltage addition
v1 1 0 ac 15 0 sin
v2 1 2 ac 12 35 sin    Note the reversal of node numbers 2 and 1
v3 3 2 ac 22 -64 sin   to simulate the swapping of connections
r1 3 0 10k
.ac lin 1 60 60
.print ac v(3,0) vp(3,0)
.end
```

```
freq          v(3)        vp(3)
6.000E+01     3.050E+01  -6.094E+01
```

- **REVIEW:**
- All the laws and rules of DC circuits apply to AC circuits, with the exception of power calculations, so long as all values are expressed and manipulated in complex form, and all voltages and currents are at the same frequency.
- When reversing the direction of a vector (equivalent to reversing the polarity of an AC voltage source in relation to other voltage sources), it can be expressed in either of two different ways: adding 180° to the angle, or reversing the sign of the magnitude.
- Meter measurements in an AC circuit correspond to the *polar magnitudes* of calculated values. Rectangular expressions of complex quantities in an AC circuit have no direct, empirical equivalent, although they are convenient for performing addition and subtraction, as Kirchhoff's Voltage and Current Laws require.

Chapter 3

REACTANCE AND IMPEDANCE – INDUCTIVE

3.1 Ac resistor circuits

If we were to plot the current and voltage for a very simple AC circuit consisting of a source and a resistor, it would look something like this:

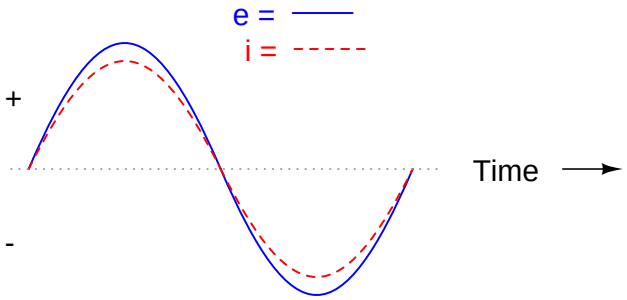

Because the resistor simply and directly resists the flow of electrons at all periods of time, the waveform for the voltage drop across the resistor is exactly in phase with the waveform for the current through it. We can look at any point in time along the horizontal axis of the plot and compare those values of current and voltage with each other (any "snapshot" look at the values of a wave are referred to as *instantaneous values*, meaning the values at that *instant* in time). When the instantaneous value for current is zero, the instantaneous voltage across the resistor is also zero. Likewise, at the moment in time where the current through the resistor is at its positive peak, the voltage across the resistor is also at its positive peak, and so on. At any given point in time along

the waves, Ohm's Law holds true for the instantaneous values of voltage and current.

We can also calculate the power dissipated by this resistor, and plot those values on the same graph:

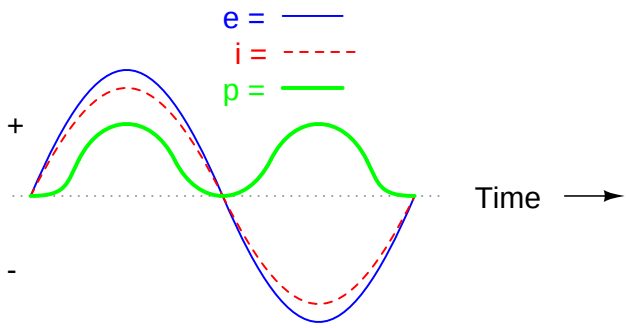

Note that the power is never a negative value. When the current is positive (above the line), the voltage is also positive, resulting in a power (p=ie) of a positive value. Conversely, when the current is negative (below the line), the voltage is also negative, which results in a positive value for power (a negative number multiplied by a negative number equals a positive number). This consistent "polarity" of power tells us that the resistor is always dissipating power, taking it from the source and releasing it in the form of heat energy. Whether the current is positive or negative, a resistor still dissipates energy.

3.2 AC inductor circuits

Inductors do not behave the same as resistors. Whereas resistors simply oppose the flow of electrons through them (by dropping a voltage directly proportional to the current), inductors oppose *changes* in current through them, by dropping a voltage directly proportional to the *rate of change* of current. In accordance with *Lenz's Law*, this induced voltage is always of such a polarity as to try to maintain current at its present value. That is, if current is increasing in magnitude, the induced voltage will "push against" the electron flow; if current is decreasing, the polarity will reverse and "push with" the electron flow to oppose the decrease. This opposition to current change is called *reactance*, rather than resistance.

Expressed mathematically, the relationship between the voltage dropped across the inductor and rate of current change through the inductor is as such:

$$e = L\frac{di}{dt}$$

The expression di/dt is one from calculus, meaning the rate of change of instantaneous current over time, in amps per second. The inductance (L) is in Henrys, and the instantaneous voltage (e), of course, is in volts. To show what happens with alternating current, let's analyze a simple inductor circuit:

If we were to plot the current and voltage for this very simple circuit, it would look something like this:

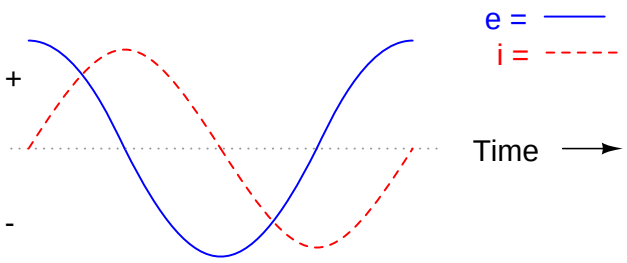

Remember, the voltage dropped across an inductor is a reaction against the *change* in current through it. Therefore, the instantaneous voltage is zero whenever the instantaneous current is at a peak (zero change, or level slope, on the current sine wave), and the instantaneous voltage is at a peak wherever the instantaneous current is at maximum change (the points of steepest slope on the current wave, where it crosses the zero line). This results in a voltage wave that is 90° out of phase with the current wave. Looking at the graph, the voltage wave seems to have a "head start" on the current wave; the voltage "leads" the current, and the current "lags" behind the voltage.

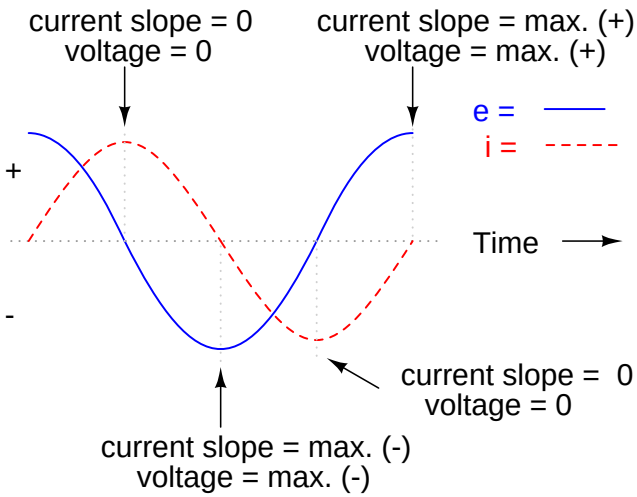

Things get even more interesting when we plot the power for this circuit:

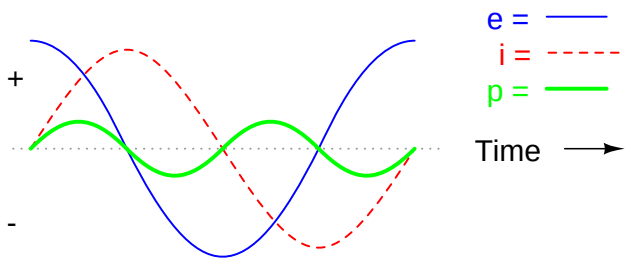

Because instantaneous power is the product of the instantaneous voltage and the instantaneous current (p=ie), the power equals zero whenever the instantaneous current *or* voltage is zero. Whenever the instantaneous current and voltage are both positive (above the line), the power is positive. As with the resistor example, the power is also positive when the instantaneous current and voltage are both negative (below the line). However, because the current and voltage waves are 90° out of phase, there are times when one is positive while the other is negative, resulting in equally frequent occurrences of *negative instantaneous power*.

But what does *negative* power mean? It means that the inductor is releasing power back to the circuit, while a positive power means that it is absorbing power from the circuit. Since the positive and negative power cycles are equal in magnitude and duration over time, the inductor releases just as much power back to the circuit as it absorbs over the span of a complete cycle. What this means in a practical sense is that the reactance of an inductor dissipates a net energy of zero, quite unlike the resistance of a resistor, which dissipates energy in the form of heat. Mind you, this is for perfect inductors only, which have no wire resistance.

An inductor's opposition to change in current translates to an opposition to alternating current in general, which is by definition always changing in instantaneous magnitude and direction. This opposition to alternating current is similar to resistance, but different in that it always results in a phase shift between current and voltage, and it dissipates zero power. Because of the differences, it has a different name: *reactance*. Reactance to AC is expressed in ohms, just like resistance is, except that its mathematical symbol is X instead of R. To be specific, reactance associate with an inductor is usually symbolized by the capital letter X with a letter L as a subscript, like this: X_L.

Since inductors drop voltage in proportion to the rate of current change, they will drop more voltage for faster-changing currents, and less voltage for slower-changing currents. What this means is that reactance in ohms for any inductor is directly proportional to the frequency of the alternating current:

$$X_L = 2\pi fL$$

For a 10 mH inductor:

Frequency (Hertz)	Reactance (Ohms)
60	3.7699
120	7.5398
2500	157.0796

AC current in a simple inductive circuit is equal to the voltage (in volts) divided by the inductive reactance (in ohms), just as AC or DC current in a simple resistive circuit is equal to the voltage (in volts) divided by the resistance (in ohms).

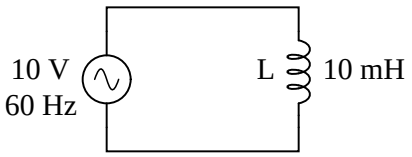

(inductive reactance of 10 mH inductor at 60 Hz)

$X_L = 3.7699\ \Omega$

$$I = \frac{E}{X}$$

$$I = \frac{10\ V}{3.7699\ \Omega}$$

$$I = 2.6526\ A$$

However, we need to keep in mind that voltage and current are not in phase here. As was shown earlier, the voltage has a phase shift of $+90^o$ with respect to the current. If we represent these phase angles of voltage and current mathematically in the form of complex numbers, we find that an inductor's opposition to current has a phase angle, too:

$$\text{Opposition} = \frac{\text{Voltage}}{\text{Current}}$$

$$\text{Opposition} = \frac{10\ V \angle 90^o}{2.6526\ A \angle 0^o}$$

$$\text{Opposition} = 3.7699\ \Omega \angle 90^o$$

or

$$0 + j3.7699\ \Omega$$

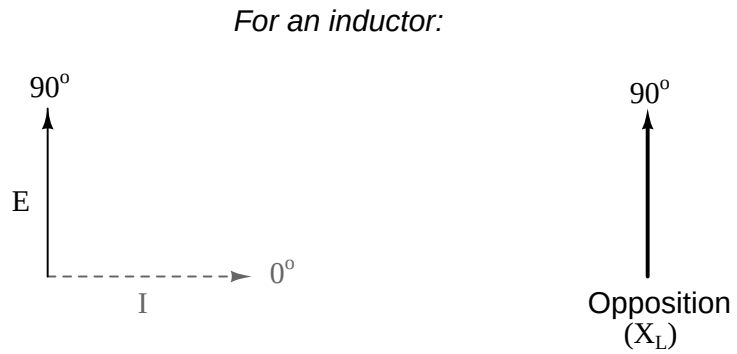

Mathematically, we say that the phase angle of an inductor's opposition to current is 90°, meaning that an inductor's opposition to current is a positive imaginary quantity. This phase angle of reactive opposition to current becomes critically important in circuit analysis, especially for complex AC circuits where reactance and resistance interact. It will prove beneficial to represent *any* component's opposition to current in terms of complex numbers rather than scalar quantities of resistance and reactance.

- **REVIEW:**
- *Inductive reactance* is the opposition that an inductor offers to alternating current due to its phase-shifted storage and release of energy in its magnetic field. Reactance is symbolized by the capital letter "X" and is measured in ohms just like resistance (R).
- Inductive reactance can be calculated using this formula: $X_L = 2\pi fL$
- Inductive reactance *increases* with increasing frequency. In other words, the higher the frequency, the more it opposes the AC flow of electrons.

3.3 Series resistor-inductor circuits

In the previous section, we explored what would happen in simple resistor-only and inductor-only AC circuits. Now we will mix the two components together in series form and investigate the effects.

Take this circuit as an example to work with:

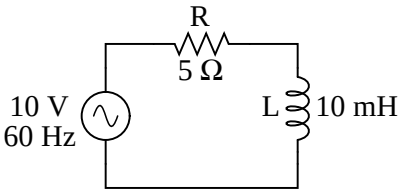

The resistor will offer 5 Ω of resistance to AC current regardless of frequency, while the inductor will offer 3.7699 Ω of reactance to AC current at 60 Hz. Because the resistor's resistance is a real number (5 Ω $\angle$ 0°, or 5 + j0 Ω), and the inductor's reactance is an imaginary number (3.7699 Ω $\angle$ 90°, or 0 + j3.7699 Ω), the combined effect of the two components will be an opposition to current equal to the complex sum of the two numbers. This combined opposition will be a vector

combination of resistance and reactance. In order to express this opposition succinctly, we need a more comprehensive term for opposition to current than either resistance or reactance alone. This term is called *impedance*, its symbol is Z, and it is also expressed in the unit of ohms, just like resistance and reactance. In the above example, the total circuit impedance is:

$$Z_{total} = (5\ \Omega \text{ resistance}) + (3.7699\ \Omega \text{ inductive reactance})$$

$$Z_{total} = 5\ \Omega\ (R) \quad + \quad 3.7699\ \Omega\ (X_L)$$

$$Z_{total} = (5\ \Omega \angle 0^o) + (3.7699\ \Omega \angle 90^0)$$

or

$$(5 + j0\ \Omega) + (0 + j3.7699\ \Omega)$$

$$Z_{total} = 5 + j3.7699\ \Omega \qquad or \qquad 6.262\ \Omega \angle 37.016^o$$

Impedance is related to voltage and current just as you might expect, in a manner similar to resistance in Ohm's Law:

Ohm's Law for AC circuits:

$$\mathbf{E = IZ} \qquad \mathbf{I = \frac{E}{Z}} \qquad \mathbf{Z = \frac{E}{I}}$$

All quantities expressed in complex, not scalar, form

In fact, this is a far more comprehensive form of Ohm's Law than what was taught in DC electronics (E=IR), just as impedance is a far more comprehensive expression of opposition to the flow of electrons than resistance is. *Any* resistance and any reactance, separately or in combination (series/parallel), can be and should be represented as a single impedance in an AC circuit.

To calculate current in the above circuit, we first need to give a phase angle reference for the voltage source, which is generally assumed to be zero. (The phase angles of resistive and inductive impedance are *always* 0° and $+90^o$, respectively, regardless of the given phase angles for voltage or current).

$$I = \frac{E}{Z}$$

$$I = \frac{10\ V \angle 0^o}{6.262\ \Omega \angle 37.016^o}$$

$$I = 1.597\ A \angle -37.016^o$$

As with the purely inductive circuit, the current wave lags behind the voltage wave (of the source), although this time the lag is not as great: only 37.016^o as opposed to a full 90° as was the

case in the purely inductive circuit.

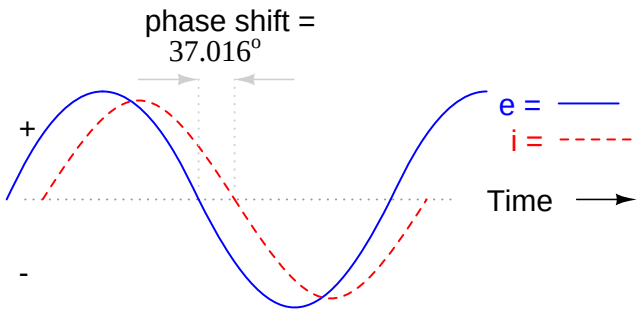

For the resistor and the inductor, the phase relationships between voltage and current haven't changed. Across voltage across the resistor is in phase (0° shift) with the current through it; and the voltage across the inductor is $+90^o$ out of phase with the current going through it. We can verify this mathematically:

$$E = IZ$$

$$E_R = I_R Z_R$$

$$E_R = (1.597\ A \angle -37.016^o)(5\ \Omega \angle 0^o)$$

$$E_R = 7.9847\ V \angle -37.016^o$$

Notice that the phase angle of E_R is equal to the phase angle of the current.

The voltage across the resistor has the exact same phase angle as the current through it, telling us that E and I are in phase (for the resistor only).

$$E = IZ$$

$$E_L = I_L Z_L$$

$$E_L = (1.597\ A \angle -37.016^o)(3.7699\ \Omega \angle 90^o)$$

$$E_L = 6.0203\ V \angle 52.984^o$$

Notice that the phase angle of E_L is exactly 90° more than the phase angle of the current.

The voltage across the inductor has a phase angle of 52.984^o, while the current through the inductor has a phase angle of -37.016^o, a difference of exactly 90° between the two. This tells us that E and I are still 90° out of phase (for the inductor only).

We can also mathematically prove that these complex values add together to make the total voltage, just as Kirchhoff's Voltage Law would predict:

$E_{total} = E_R + E_L$

$E_{total} = (7.9847 \text{ V} \angle -37.016^o) + (6.0203 \text{ V} \angle 52.984^o)$

$E_{total} = 10 \text{ V} \angle 0^o$

Let's check the validity of our calculations with SPICE:

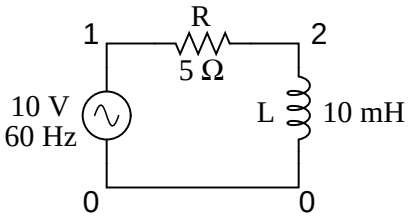


```
ac r-l circuit
v1 1 0 ac 10 sin
r1 1 2 5
l1 2 0 10m
.ac lin 1 60 60
.print ac v(1,2) v(2,0) i(v1)
.print ac vp(1,2) vp(2,0) ip(v1)
.end

freq          v(1,2)      v(2)        i(v1)
6.000E+01     7.985E+00   6.020E+00   1.597E+00
freq          vp(1,2)     vp(2)       ip(v1)
6.000E+01    -3.702E+01   5.298E+01   1.430E+02
```

Interpreted SPICE results

$E_R = 7.985 \text{ V} \angle -37.02^o$

$E_L = 6.020 \text{ V} \angle 52.98^o$

$I = 1.597 \text{ A} \angle 143.0^o$

Note that just as with DC circuits, SPICE outputs current figures as though they were negative (180° out of phase) with the supply voltage. Instead of a phase angle of -37.016^o, we get a current phase angle of 143° (-37° + 180°). This is merely an idiosyncrasy of SPICE and does not represent anything significant in the circuit simulation itself. Note how both the resistor and inductor voltage phase readings match our calculations (-37.02^o and 52.98^o, respectively), just as we expected them to.

With all these figures to keep track of for even such a simple circuit as this, it would be beneficial for us to use the "table" method. Applying a table to this simple series resistor-inductor circuit would proceed as such. First, draw up a table for E/I/Z figures and insert all component values in these terms (in other words, don't insert actual resistance or inductance values in Ohms and Henrys, respectively, into the table; rather, convert them into complex figures of impedance and write those in):

	R	L	Total	
E			**10 + j0** **10** $\angle$ 0°	Volts
I				Amps
Z	**5 + j0** **5** $\angle$ 0°	**0 + j3.7699** **3.7699** $\angle$ 90°		Ohms

Although it isn't necessary, I find it helpful to write *both* the rectangular and polar forms of each quantity in the table. If you are using a calculator that has the ability to perform complex arithmetic without the need for conversion between rectangular and polar forms, then this extra documentation is completely unnecessary. However, if you are forced to perform complex arithmetic "longhand" (addition and subtraction in rectangular form, and multiplication and division in polar form), writing each quantity in both forms will be useful indeed.

Now that our "given" figures are inserted into their respective locations in the table, we can proceed just as with DC: determine the total impedance from the individual impedances. Since this is a series circuit, we know that opposition to electron flow (resistance *or* impedance) adds to form the total opposition:

	R	L	Total	
E			10 + j0 10 $\angle$ 0°	Volts
I				Amps
Z	5 + j0 5 $\angle$ 0°	0 + j3.7699 3.7699 $\angle$ 90°	**5 + j3.7699** **6.262** $\angle$ 37.016^o	Ohms

Rule of series circuits

$Z_{total} = Z_R + Z_L$

Now that we know total voltage and total impedance, we can apply Ohm's Law (I=E/Z) to determine total current:

	R	L	Total	
E			$10 + j0$ $10 \angle 0^o$	Volts
I			**1.2751 - j0.9614** **1.597** $\angle$ -37.016^o	Amps
Z	$5 + j0$ $5 \angle 0^o$	$0 + j3.7699$ $3.7699 \angle 90^o$	$5 + j3.7699$ $6.262 \angle 37.016^o$	Ohms

Ohm's Law

$$I = \frac{E}{Z}$$

Just as with DC, the total current in a series AC circuit is shared equally by all components. This is still true because in a series circuit there is only a single path for electrons to flow, therefore the rate of their flow must uniform throughout. Consequently, we can transfer the figures for current into the columns for the resistor and inductor alike:

	R	L	Total	
E			$10 + j0$ $10 \angle 0^o$	Volts
I	**1.2751 - j0.9614** **1.597** $\angle$ -37.016^o	**1.2751 - j0.9614** **1.597** $\angle$ -37.016^o	1.2751 - j0.9614 1.597 $\angle$ -37.016^o	Amps
Z	$5 + j0$ $5 \angle 0^o$	$0 + j3.7699$ $3.7699 \angle 90^o$	$5 + j3.7699$ $6.262 \angle 37.016^o$	Ohms

Rule of series circuits:

$$I_{total} = I_R = I_L$$

Now all that's left to figure is the voltage drop across the resistor and inductor, respectively. This is done through the use of Ohm's Law (E=IZ), applied vertically in each column of the table:

	R	L	Total	
E	**6.3756 - j4.8071** **7.9847** $\angle$ -37.016^o	**3.6244 + j4.8071** **6.0203** $\angle$ 52.984^o	10 + j0 10 $\angle$ 0°	Volts
I	1.2751 - j0.9614 1.597 $\angle$ -37.016^o	1.2751 - j0.9614 1.597 $\angle$ -37.016^o	1.2751 - j0.9614 1.597 $\angle$ -37.016^o	Amps
Z	5 + j0 5 $\angle$ 0°	0 + j3.7699 3.7699 $\angle$ 90°	5 + j3.7699 6.262 $\angle$ 37.016^o	Ohms
	Ohm's Law E = IZ	*Ohm's Law* E = IZ		

And with that, our table is complete. The exact same rules we applied in the analysis of DC circuits apply to AC circuits as well, with the caveat that all quantities must be represented and calculated in complex rather than scalar form. So long as phase shift is properly represented in our calculations, there is no fundamental difference in how we approach basic AC circuit analysis versus DC.

Now is a good time to review the relationship between these calculated figures and readings given by actual instrument measurements of voltage and current. The figures here that directly relate to real-life measurements are those in *polar notation*, not rectangular! In other words, if you were to connect a voltmeter across the resistor in this circuit, it would indicate **7.9847** volts, not 6.3756 (real rectangular) or 4.8071 (imaginary rectangular) volts. To describe this in graphical terms, measurement instruments simply tell you how long the vector is for that particular quantity (voltage or current).

Rectangular notation, while convenient for arithmetical addition and subtraction, is a more abstract form of notation than polar in relation to real-world measurements. As I stated before, I will indicate both polar and rectangular forms of each quantity in my AC circuit tables simply for convenience of mathematical calculation. This is not absolutely necessary, but may be helpful for those following along without the benefit of an advanced calculator. If we were restrict ourselves to the use of only one form of notation, the best choice would be polar, because it is the only one that can be directly correlated to real measurements.

- **REVIEW:**
- *Impedance* is the total measure of opposition to electric current and is the complex (vector) sum of ("real") resistance and ("imaginary") reactance. It is symbolized by the letter "Z" and measured in ohms, just like resistance (R) and reactance (X).
- Impedances (Z) are managed just like resistances (R) in series circuit analysis: series impedances add to form the total impedance. Just be sure to perform all calculations in complex (not scalar) form! $Z_{Total} = Z_1 + Z_2 + \ldots Z_n$
- A purely resistive impedance will always have a phase angle of exactly 0° ($Z_R = R\ \Omega\ \angle\ 0^o$).
- A purely inductive impedance will always have a phase angle of exactly $+90^o$ ($Z_L = X_L\ \Omega\ \angle\ 90^o$).

- Ohm's Law for AC circuits: E = IZ ; I = E/Z ; Z = E/I

- When resistors and inductors are mixed together in circuits, the total impedance will have a phase angle somewhere between 0° and $+90^o$. The circuit current will have a phase angle somewhere between 0° and -90°.

- Series AC circuits exhibit the same fundamental properties as series DC circuits: current is uniform throughout the circuit, voltage drops add to form the total voltage, and impedances add to form the total impedance.

3.4 Parallel resistor-inductor circuits

Let's take the same components for our series example circuit and connect them in parallel:

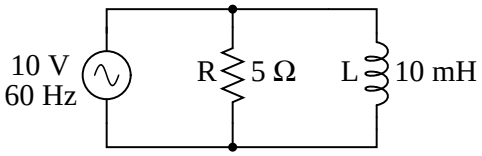

Because the power source has the same frequency as the series example circuit, and the resistor and inductor both have the same values of resistance and inductance, respectively, they must also have the same values of impedance. So, we can begin our analysis table with the same "given" values:

	R	L	Total	
E			**10 + j0** **10** $\angle 0^o$	Volts
I				Amps
Z	**5 + j0** **5** $\angle 0^o$	**0 + j3.7699** **3.7699** $\angle 90^o$		Ohms

The only difference in our analysis technique this time is that we will apply the rules of parallel circuits instead of the rules for series circuits. The approach is fundamentally the same as for DC. We know that voltage is shared uniformly by all components in a parallel circuit, so we can transfer the figure of total voltage (10 volts $\angle$ 0°) to all components columns:

	R	L	Total	
E	10 + j0 10 ∠ 0°	10 + j0 10 ∠ 0°	10 + j0 10 ∠ 0°	Volts
I				Amps
Z	5 + j0 5 ∠ 0°	0 + j3.7699 3.7699 ∠ 90°		Ohms

Rule of parallel circuits:

$E_{total} = E_R = E_L$

Now we can apply Ohm's Law (I=E/Z) vertically to two columns of the table, calculating current through the resistor and current through the inductor:

	R	L	Total	
E	10 + j0 10 ∠ 0°	10 + j0 10 ∠ 0°	10 + j0 10 ∠ 0°	Volts
I	**2 + j0** **2** ∠ 0°	**0 - j2.6526** **2.6526** ∠ -90°		Amps
Z	5 + j0 5 ∠ 0°	0 + j3.7699 3.7699 ∠ 90°		Ohms

Ohm's Law $I = \frac{E}{Z}$ *Ohm's Law* $I = \frac{E}{Z}$

Just as with DC circuits, branch currents in a parallel AC circuit add to form the total current (Kirchhoff's Current Law still holds true for AC as it did for DC):

	R	L	Total	
E	10 + j0 10 ∠ 0°	10 + j0 10 ∠ 0°	10 + j0 10 ∠ 0°	Volts
I	2 + j0 2 ∠ 0°	0 - j2.6526 2.6526 ∠ -90°	**2 - j2.6526** **3.3221** ∠ -52.984°	Amps
Z	5 + j0 5 ∠ 0°	0 + j3.7699 3.7699 ∠ 90°		Ohms

Rule of parallel circuits:

$I_{total} = I_R + I_L$

Finally, total impedance can be calculated by using Ohm's Law (Z=E/I) vertically in the "Total" column. Incidentally, parallel impedance can also be calculated by using a reciprocal formula

identical to that used in calculating parallel resistances.

$$Z_{parallel} = \frac{1}{\frac{1}{Z_1} + \frac{1}{Z_2} + \cdots \frac{1}{Z_n}}$$

The only problem with using this formula is that it typically involves a lot of calculator keystrokes to carry out. And if you're determined to run through a formula like this "longhand," be prepared for a very large amount of work! But, just as with DC circuits, we often have multiple options in calculating the quantities in our analysis tables, and this example is no different. No matter which way you calculate total impedance (Ohm's Law or the reciprocal formula), you will arrive at the same figure:

	R	L	Total	
E	10 + j0 10 ∠ 0°	10 + j0 10 ∠ 0°	10 + j0 10 ∠ 0°	Volts
I	2 + j0 2 ∠ 0°	0 - j2.6526 2.6526 ∠ -90°	2 - j2.6526 3.322 ∠ -52.984°	Amps
Z	5 + j0 5 ∠ 0°	0 + j3.7699 3.7699 ∠ 90°	**1.8122 + j2.4035** **3.0102** ∠ 52.984°	Ohms

Ohm's Law $Z = \frac{E}{I}$ *or* *Rule of parallel circuits:* $Z_{total} = \frac{1}{\frac{1}{Z_R} + \frac{1}{Z_L}}$

- **REVIEW:**

- Impedances (Z) are managed just like resistances (R) in parallel circuit analysis: parallel impedances diminish to form the total impedance, using the reciprocal formula. Just be sure to perform all calculations in complex (not scalar) form! $Z_{Total} = 1/(1/Z_1 + 1/Z_2 + \ldots 1/Z_n)$

- Ohm's Law for AC circuits: E = IZ ; I = E/Z ; Z = E/I

- When resistors and inductors are mixed together in parallel circuits (just as in series circuits), the total impedance will have a phase angle somewhere between 0° and $+90^o$. The circuit current will have a phase angle somewhere between 0° and -90°.

- Parallel AC circuits exhibit the same fundamental properties as parallel DC circuits: voltage is uniform throughout the circuit, branch currents add to form the total current, and impedances diminish (through the reciprocal formula) to form the total impedance.

3.5 Inductor quirks

In an ideal case, an inductor acts as a purely reactive device. That is, its opposition to AC current is strictly based on inductive reaction to changes in current, and not electron friction as is the case with resistive components. However, inductors are not quite so pure in their reactive behavior. To begin with, they're made of wire, and we know that all wire possesses some measurable amount of resistance (unless it's superconducting wire). This built-in resistance acts as though it were connected in series with the perfect inductance of the coil, like this:

Equivalent circuit for a real inductor

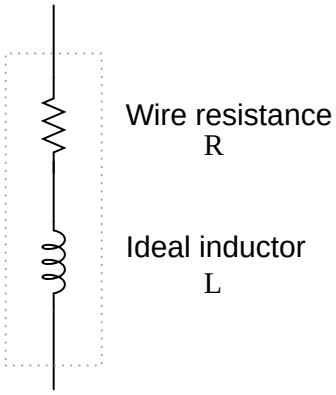

Consequently, the impedance of any real inductor will always be a complex combination of resistance and inductive reactance.

Compounding this problem is something called the *skin effect*, which is AC's tendency to flow through the outer areas of a conductor's cross-section rather than through the middle. When electrons flow in a single direction (DC), they use the entire cross-sectional area of the conductor to move. Electrons switching directions of flow, on the other hand, tend to avoid travel through the very middle of a conductor, limiting the effective cross-sectional area available. The skin effect becomes more pronounced at higher frequencies.

Also, the alternating magnetic field of an inductor energized with AC may radiate off into space as part of an electromagnetic wave, especially at high frequencies. This radiated energy does not return to the inductor, and so it manifests itself as resistance (power dissipation) in the circuit.

Added to the resistive losses of wire and radiation, there are other effects at work in iron-core inductors which manifest themselves as additional resistance between the leads. When an inductor is energized with AC, the alternating magnetic fields produced tend to induce circulating currents within the iron core known as *eddy currents*. These electric currents in the iron core have to overcome the electrical resistance offered by the iron, which is not as good a conductor as copper. Eddy current losses are primarily counteracted by dividing the iron core up into many thin sheets (laminations), each one separated from the other by a thin layer of electrically insulating varnish. With the cross-section of the core divided up into many electrically isolated sections, current cannot circulate within that cross-sectional area and there will be no (or very little) resistive losses from that effect.

As you might have expected, eddy current losses in metallic inductor cores manifest themselves in the form of heat. The effect is more pronounced at higher frequencies, and can be so extreme that it is sometimes exploited in manufacturing processes to heat metal objects! In fact, this process of

"inductive heating" is often used in high-purity metal foundry operations, where metallic elements and alloys must be heated in a vacuum environment to avoid contamination by air, and thus where standard combustion heating technology would be useless. It is a "non-contact" technology, the heated substance not having to touch the coil(s) producing the magnetic field.

In high-frequency service, eddy currents can even develop within the cross-section of the wire itself, contributing to additional resistive effects. To counteract this tendency, special wire made of very fine, individually insulated strands called *Litz wire* (short for *Litzendraht*) can be used. The insulation separating strands from each other prevent eddy currents from circulating through the whole wire's cross-sectional area.

Additionally, any magnetic hysteresis that needs to be overcome with every reversal of the inductor's magnetic field constitutes an expenditure of energy that manifests itself as resistance in the circuit. Some core materials (such as ferrite) are particularly notorious for their hysteretic effect. Counteracting this effect is best done by means of proper core material selection and limits on the peak magnetic field intensity generated with each cycle.

Altogether, the stray resistive properties of a real inductor (wire resistance, radiation losses, eddy currents, and hysteresis losses) are expressed under the single term of "effective resistance:"

Equivalent circuit for a real inductor

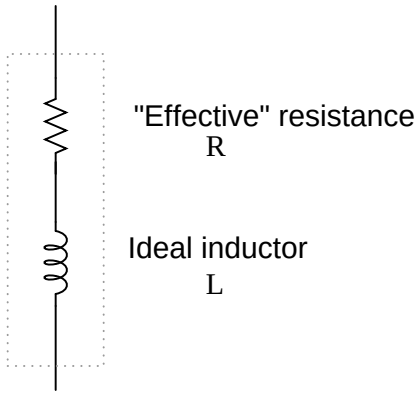

It is worthy to note that the skin effect and radiation losses apply just as well to straight lengths of wire in an AC circuit as they do a coiled wire. Usually their combined effect is too small to notice, but at radio frequencies they can be quite large. A radio transmitter antenna, for example, is designed with the express purpose of dissipating the greatest amount of energy in the form of electromagnetic radiation.

Effective resistance in an inductor can be a serious consideration for the AC circuit designer. To help quantify the relative amount of effective resistance in an inductor, another value exists called the *Q factor*, or "quality factor" which is calculated as follows:

$$Q = \frac{X_L}{R}$$

The symbol "Q" has nothing to do with electric charge (coulombs), which tends to be confusing. For some reason, the Powers That Be decided to use the same letter of the alphabet to denote a totally different quantity.

The higher the value for "Q," the "purer" the inductor is. Because it's so easy to add additional resistance if needed, a high-Q inductor is better than a low-Q inductor for design purposes. An ideal inductor would have a Q of infinity, with zero effective resistance.

Because inductive reactance (X) varies with frequency, so will Q. However, since the resistive effects of inductors (wire skin effect, radiation losses, eddy current, and hysteresis) also vary with frequency, Q does not vary proportionally with reactance. In order for a Q value to have precise meaning, it must be specified at a particular test frequency.

Stray resistance isn't the only inductor quirk we need to be aware of. Due to the fact that the multiple turns of wire comprising inductors are separated from each other by an insulating gap (air, varnish, or some other kind of electrical insulation), we have the potential for capacitance to develop between turns. AC capacitance will be explored in the next chapter, but it suffices to say at this point that it behaves very differently from AC inductance, and therefore further "taints" the reactive purity of real inductors.

3.6 More on the "skin effect"

As previously mentioned, the skin effect is where alternating current tends to avoid travel through the center of a solid conductor, limiting itself to conduction near the surface. This effectively limits the cross-sectional conductor area available to carry alternating electron flow, increasing the resistance of that conductor above what it would normally be for direct current:

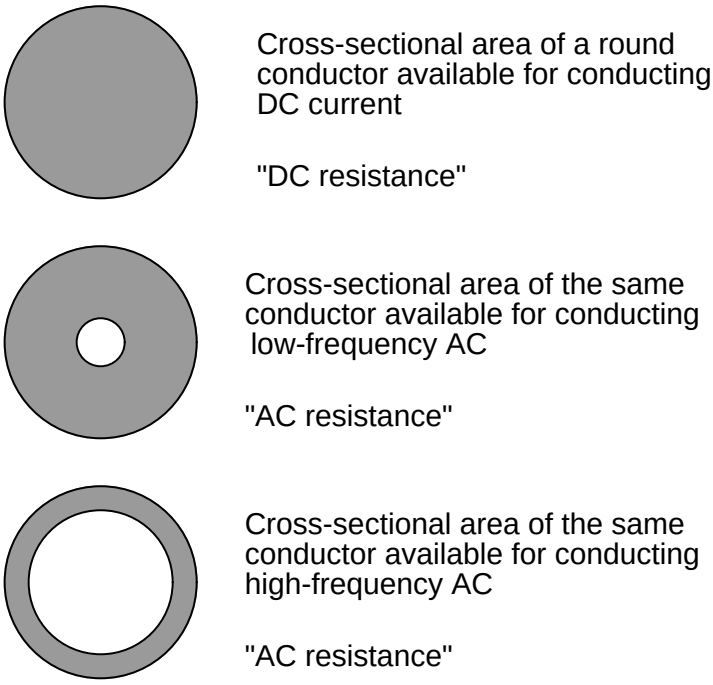

The electrical resistance of the conductor with all its cross-sectional area in use is known as the "DC resistance," the "AC resistance" of the same conductor referring to a higher figure resulting from the skin effect. As you can see, at high frequencies the AC current avoids travel through most

of the conductor's cross-sectional area. For the purpose of conducting current, the wire might as well be hollow!

In some radio applications (antennas, most notably) this effect is exploited. Since radio-frequency AC currents wouldn't travel through the middle of a conductor anyway, why not just use hollow metal rods instead of solid metal wires and save both weight and cost? Most antenna structures are made of hollow metal tubes for this reason.

The degree to which frequency affects the effective resistance of a wire conductor is impacted by the gage of that wire. As a rule, large-gage wires exhibit a more pronounced skin effect (change in resistance from DC) than small-gage wires at any given frequency. The equation for approximating skin effect at high frequencies (greater than 1 MHz) is as follows:

$$R_{AC} = (R_{DC})(k)\sqrt{f}$$

Where,

R_{AC} = AC resistance at given frequency "f"

R_{DC} = Resistance at zero frequency (DC)

k = Wire gage factor (see table below)

f = Frequency of AC in MHz (MegaHertz)

The following table gives approximate values of "k" factor for various round wire sizes:

Gage size	k factor
4/0	124.5
2/0	99.0
1/0	88.0
2	69.8
4	55.5
6	47.9
8	34.8
10	27.6
14	17.6
18	10.9
22	6.86

For example, a length of number 10 gage wire with a DC end-to-end resistance of 25 Ω would have an AC (effective) resistance of 2.182 kΩ at a frequency of 10 MHz:

$$R_{AC} = (R_{DC})(k)\sqrt{f}$$

$$R_{AC} = (25\ \Omega)(27.6)\ \sqrt{10}$$

$$R_{AC} = 2.182\ k\Omega$$

Please remember that this figure is *not* impedance, and it does *not* consider any reactive effects, inductive or capacitive. This is simply an estimated figure of pure resistance for the conductor (that opposition to the AC flow of electrons which *does* dissipate power in the form of heat), corrected for skin effect. Reactance, and the combined effects of reactance and resistance (impedance), are entirely different matters.

Chapter 4

REACTANCE AND IMPEDANCE – CAPACITIVE

4.1 AC resistor circuits

If we were to plot the current and voltage for a very simple AC circuit consisting of a source and a resistor, it would look something like this:

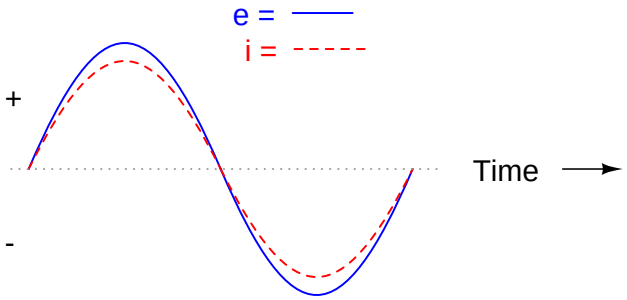

Because the resistor allows an amount of current directly proportional to the voltage across it at all periods of time, the waveform for the current is exactly in phase with the waveform for the voltage. We can look at any point in time along the horizontal axis of the plot and compare those values of current and voltage with each other (any "snapshot" look at the values of a wave are referred to as *instantaneous values*, meaning the values at that *instant* in time). When the instantaneous value for voltage is zero, the instantaneous current through the resistor is also zero. Likewise, at the moment in time where the voltage across the resistor is at its positive peak, the current through the resistor is also at its positive peak, and so on. At any given point in time along the waves, Ohm's Law holds

true for the instantaneous values of voltage and current.

We can also calculate the power dissipated by this resistor, and plot those values on the same graph:

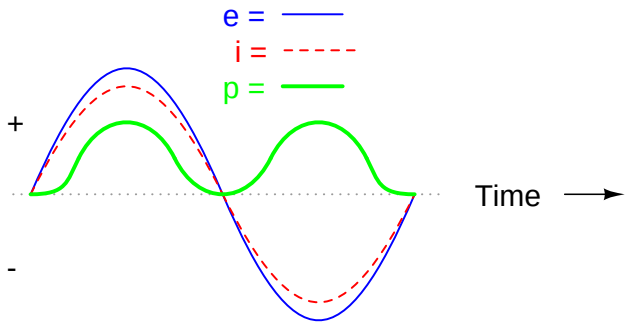

Note that the power is never a negative value. When the current is positive (above the line), the voltage is also positive, resulting in a power (p=ie) of a positive value. Conversely, when the current is negative (below the line), the voltage is also negative, which results in a positive value for power (a negative number multiplied by a negative number equals a positive number). This consistent "polarity" of power tells us that the resistor is always dissipating power, taking it from the source and releasing it in the form of heat energy. Whether the current is positive or negative, a resistor still dissipates energy.

4.2 AC capacitor circuits

Capacitors do not behave the same as resistors. Whereas resistors allow a flow of electrons through them directly proportional to the voltage drop, capacitors oppose *changes* in voltage by drawing or supplying current as they charge or discharge to the new voltage level. The flow of electrons "through" a capacitor is directly proportional to the *rate of change* of voltage across the capacitor. This opposition to voltage change is another form of *reactance*, but one that is precisely opposite to the kind exhibited by inductors.

Expressed mathematically, the relationship between the current "through" the capacitor and rate of voltage change across the capacitor is as such:

$$i = C \frac{dv}{dt}$$

The expression *dv/dt* is one from calculus, meaning the rate of change of instantaneous voltage over time, in volts per second. The capacitance (C) is in Farads, and the instantaneous current (i), of course, is in amps. To show what happens with alternating current, let's analyze a simple capacitor circuit:

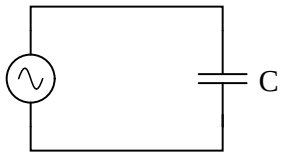

If we were to plot the current and voltage for this very simple circuit, it would look something like this:

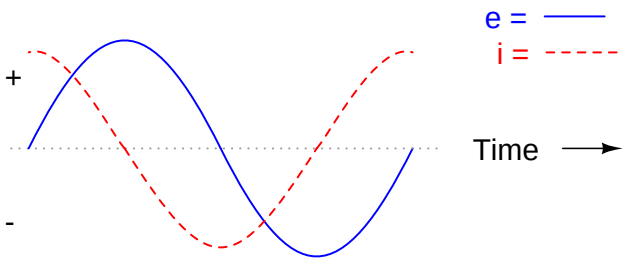

Remember, the current through a capacitor is a reaction against the *change* in voltage across it. Therefore, the instantaneous current is zero whenever the instantaneous voltage is at a peak (zero change, or level slope, on the voltage sine wave), and the instantaneous current is at a peak wherever the instantaneous voltage is at maximum change (the points of steepest slope on the voltage wave, where it crosses the zero line). This results in a voltage wave that is -90° out of phase with the current wave. Looking at the graph, the current wave seems to have a "head start" on the voltage wave; the current "leads" the voltage, and the voltage "lags" behind the current.

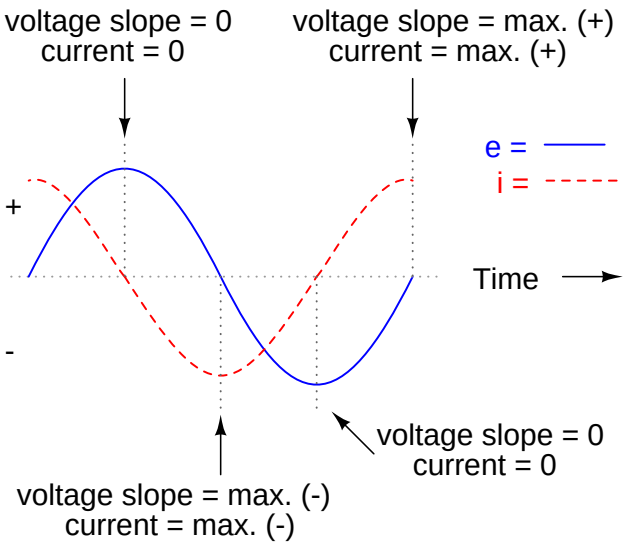

As you might have guessed, the same unusual power wave that we saw with the simple inductor circuit is present in the simple capacitor circuit, too:

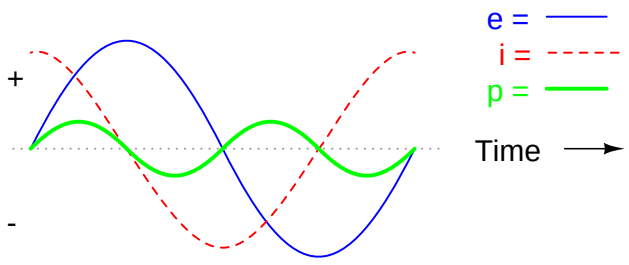

As with the simple inductor circuit, the 90 degree phase shift between voltage and current results in a power wave that alternates equally between positive and negative. This means that a capacitor does not dissipate power as it reacts against changes in voltage; it merely absorbs and releases power, alternately.

A capacitor's opposition to change in voltage translates to an opposition to alternating voltage in general, which is by definition always changing in instantaneous magnitude and direction. For any given magnitude of AC voltage at a given frequency, a capacitor of given size will "conduct" a certain magnitude of AC current. Just as the current through a resistor is a function of the voltage across the resistor and the resistance offered by the resistor, the AC current through a capacitor is a function of the AC voltage across it, and the *reactance* offered by the capacitor. As with inductors, the reactance of a capacitor is expressed in ohms and symbolized by the letter X (or X_C to be more specific).

Since capacitors "conduct" current in proportion to the rate of voltage change, they will pass more current for faster-changing voltages (as they charge and discharge to the same voltage peaks in less time), and less current for slower-changing voltages. What this means is that reactance in ohms for any capacitor is *inversely* proportional to the frequency of the alternating current:

$$X_C = \frac{1}{2\pi fC}$$

For a 100 uF capacitor:

Frequency (Hertz)	Reactance (Ohms)
60	26.5258
120	13.2629
2500	0.6366

Please note that the relationship of capacitive reactance to frequency is exactly opposite from that of inductive reactance. Capacitive reactance (in ohms) decreases with increasing AC frequency. Conversely, inductive reactance (in ohms) increases with increasing AC frequency. Inductors oppose faster changing currents by producing greater voltage drops; capacitors oppose faster changing voltage drops by allowing greater currents.

AC current in a simple capacitive circuit is equal to the voltage (in volts) divided by the capacitive reactance (in ohms), just as AC or DC current in a simple resistive circuit is equal to the voltage (in volts) divided by the resistance (in ohms).

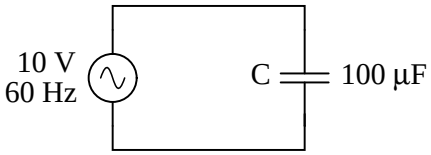

$X_C = 26.5258\ \Omega$

$$I = \frac{E}{X}$$

$$I = \frac{10\ V}{26.5258\ \Omega}$$

$I = 0.3770$ A

However, we need to keep in mind that voltage and current are not in phase here. As was shown earlier, the current has a phase shift of +90 with respect to the voltage. If we represent these phase angles of voltage and current mathematically, we can calculate the phase angle of the inductor's reactive opposition to current.

$$\text{Opposition} = \frac{\text{Voltage}}{\text{Current}}$$

$$\text{Opposition} = \frac{10\ V \angle 0^o}{0.3770\ A \angle 90^o}$$

$$\text{Opposition} = 26.5258\ \Omega \angle -90^o$$

For a capacitor:

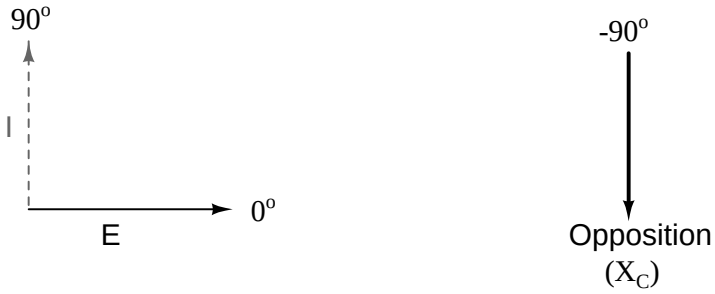

Mathematically, we say that the phase angle of a capacitor's opposition to current is -90°, meaning that a capacitor's opposition to current is a negative imaginary quantity. This phase angle of reactive opposition to current becomes critically important in circuit analysis, especially for complex AC

circuits where reactance and resistance interact. It will prove beneficial to represent *any* component's opposition to current in terms of complex numbers, and not just scalar quantities of resistance and reactance.

- **REVIEW:**
- *Capacitive reactance* is the opposition that a capacitor offers to alternating current due to its phase-shifted storage and release of energy in its electric field. Reactance is symbolized by the capital letter "X" and is measured in ohms just like resistance (R).
- Capacitive reactance can be calculated using this formula: $X_C = 1/(2\pi fC)$
- Capacitive reactance *decreases* with increasing frequency. In other words, the higher the frequency, the less it opposes (the more it "conducts") the AC flow of electrons.

4.3 Series resistor-capacitor circuits

In the last section, we learned what would happen in simple resistor-only and capacitor-only AC circuits. Now we will combine the two components together in series form and investigate the effects.

Take this circuit as an example to analyze:

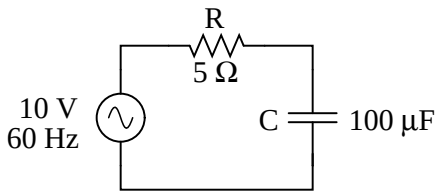

The resistor will offer 5 Ω of resistance to AC current regardless of frequency, while the capacitor will offer 26.5258 Ω of reactance to AC current at 60 Hz. Because the resistor's resistance is a real number (5 Ω ∠ 0°, or 5 + j0 Ω), and the capacitor's reactance is an imaginary number (26.5258 Ω ∠ -90°, or 0 - j26.5258 Ω), the combined effect of the two components will be an opposition to current equal to the complex sum of the two numbers. The term for this complex opposition to current is *impedance*, its symbol is Z, and it is also expressed in the unit of ohms, just like resistance and reactance. In the above example, the total circuit impedance is:

Z_{total} = (5 Ω resistance) + (26.5258 Ω capacitive reactance)

Z_{total} = 5 Ω (R) + 26.5258 Ω (X_C)

Z_{total} = (5 Ω ∠ 0°) + (26.5258 Ω ∠ -90°)

or

(5 + j0 Ω) + (0 - j26.5258 Ω)

Z_{total} = 5 - j26.5258 Ω *or* 26.993 Ω ∠ -79.325^o

Impedance is related to voltage and current just as you might expect, in a manner similar to resistance in Ohm's Law:

Ohm's Law for AC circuits:

$$\mathbf{E = IZ} \qquad \mathbf{I = \frac{E}{Z}} \qquad \mathbf{Z = \frac{E}{I}}$$

All quantities expressed in complex, not scalar, form

In fact, this is a far more comprehensive form of Ohm's Law than what was taught in DC electronics (E=IR), just as impedance is a far more comprehensive expression of opposition to the flow of electrons than simple resistance is. Any resistance and any reactance, separately or in combination (series/parallel), can be and should be represented as a single impedance.

To calculate current in the above circuit, we first need to give a phase angle reference for the voltage source, which is generally assumed to be zero. (The phase angles of resistive and capacitive impedance are *always* 0° and -90°, respectively, regardless of the given phase angles for voltage or current).

$$I = \frac{E}{Z}$$

$$I = \frac{10 \text{ V} \angle 0^o}{26.933\ \Omega \angle -79.325^o}$$

$$I = 370.5 \text{ mA} \angle 79.325^o$$

As with the purely capacitive circuit, the current wave is leading the voltage wave (of the source), although this time the difference is 79.325^o instead of a full 90°.

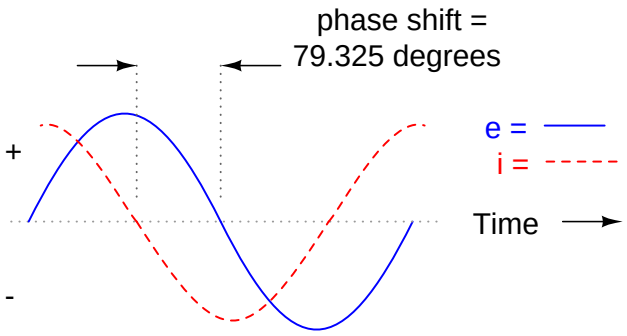

As we learned in the AC inductance chapter, the "table" method of organizing circuit quantities is a very useful tool for AC analysis just as it is for DC analysis. Let's place out known figures for this series circuit into a table and continue the analysis using this tool:

	R	C	Total	
E			10 + j0 10 ∠ 0°	Volts
I			68.623m + j364.06m 370.5m ∠ 79.325°	Amps
Z	5 + j0 5 ∠ 0°	0 - j26.5258 26.5258 ∠ -90°	5 - j26.5258 26.993 ∠ -79.325°	Ohms

Current in a series circuit is shared equally by all components, so the figures placed in the "Total" column for current can be distributed to all other columns as well:

	R	C	Total	
E			10 + j0 10 ∠ 0°	Volts
I	**68.623m + j364.06m** **370.5m** ∠ 79.325°	**68.623m + j364.06m** **370.5m** ∠ 79.325°	68.623m + j364.06m 370.5m ∠ 79.325°	Amps
Z	5 + j0 5 ∠ 0°	0 - j26.5258 26.5258 ∠ -90°	5 - j26.5258 26.993 ∠ -79.325°	Ohms

Rule of series circuits:

$I_{total} = I_R = I_C$

Continuing with our analysis, we can apply Ohm's Law (E=IR) vertically to determine voltage across the resistor and capacitor:

	R	C	Total	
E	**343.11m + j1.8203** **1.8523** ∠ 79.325°	**9.6569 - j1.8203** **9.8269** ∠ -10.675°	10 + j0 10 ∠ 0°	Volts
I	68.623m + j364.06m 370.5m ∠ 79.325°	68.623m + j364.06m 370.5m ∠ 79.325°	68.623m + j364.06m 370.5m ∠ 79.325°	Amps
Z	5 + j0 5 ∠ 0°	0 - j26.5258 26.5258 ∠ -90°	5 - j26.5258 26.993 ∠ -79.325°	Ohms

Ohm's Law E = IZ

Ohm's Law E = IZ

Notice how the voltage across the resistor has the exact same phase angle as the current through it, telling us that E and I are in phase (for the resistor only). The voltage across the capacitor has a phase angle of -10.675°, exactly 90° *less* than the phase angle of the circuit current. This tells us that the capacitor's voltage and current are still 90° out of phase with each other.

Let's check our calculations with SPICE:

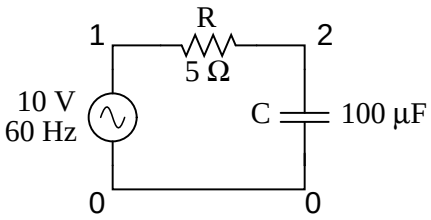


```
ac r-c circuit
v1 1 0 ac 10 sin
r1 1 2 5
c1 2 0 100u
.ac lin 1 60 60
.print ac v(1,2) v(2,0) i(v1)
.print ac vp(1,2) vp(2,0) ip(v1)
.end

freq          v(1,2)      v(2)        i(v1)
6.000E+01     1.852E+00   9.827E+00   3.705E-01
freq          vp(1,2)     vp(2)       ip(v1)
6.000E+01     7.933E+01  -1.067E+01  -1.007E+02
```

Interpreted SPICE results

$E_R = 1.852 \text{ V} \angle 79.33^o$

$E_C = 9.827 \text{ V} \angle -10.67^o$

$I = 370.5 \text{ mA} \angle -100.7^o$

Once again, SPICE confusingly prints the current phase angle at a value equal to the real phase angle plus 180° (or minus 180°). However, it's a simple matter to correct this figure and check to see if our work is correct. In this case, the -100.7^o output by SPICE for current phase angle equates to a positive 79.3^o, which does correspond to our previously calculated figure of 79.325^o.

Again, it must be emphasized that the calculated figures corresponding to real-life voltage and current measurements are those in *polar* form, not rectangular form! For example, if we were to actually build this series resistor-capacitor circuit and measure voltage across the resistor, our voltmeter would indicate **1.8523** volts, not 343.11 millivolts (real rectangular) or 1.8203 volts (imaginary rectangular). Real instruments connected to real circuits provide indications corresponding to the vector length (magnitude) of the calculated figures. While the rectangular form of complex number notation is useful for performing addition and subtraction, it is a more abstract form of notation than polar, which alone has direct correspondence to true measurements.

- **REVIEW:**
- *Impedance* is the total measure of opposition to electric current and is the complex (vector) sum of ("real") resistance and ("imaginary") reactance.

- Impedances (Z) are managed just like resistances (R) in series circuit analysis: series impedances add to form the total impedance. Just be sure to perform all calculations in complex (not scalar) form! $Z_{Total} = Z_1 + Z_2 + \ldots Z_n$
- Please note that impedances always add in series, regardless of what type of components comprise the impedances. That is, resistive impedance, inductive impedance, and capacitive impedance are to be treated the same way mathematically.
- A purely resistive impedance will always have a phase angle of exactly 0° ($Z_R = R\ \Omega\ \angle\ 0^o$).
- A purely capacitive impedance will always have a phase angle of exactly -90° ($Z_C = X_C\ \Omega\ \angle$ -90°).
- Ohm's Law for AC circuits: E = IZ ; I = E/Z ; Z = E/I
- When resistors and capacitors are mixed together in circuits, the total impedance will have a phase angle somewhere between 0° and -90°.
- Series AC circuits exhibit the same fundamental properties as series DC circuits: current is uniform throughout the circuit, voltage drops add to form the total voltage, and impedances add to form the total impedance.

4.4 Parallel resistor-capacitor circuits

Using the same value components in our series example circuit, we will connect them in parallel and see what happens:

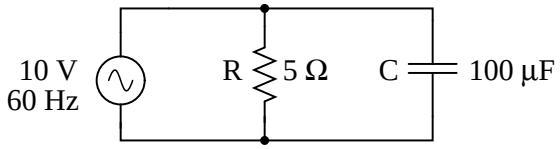

Because the power source has the same frequency as the series example circuit, and the resistor and capacitor both have the same values of resistance and capacitance, respectively, they must also have the same values of impedance. So, we can begin our analysis table with the same "given" values:

	R	C	Total	
E			10 + j0 10 ∠ 0°	Volts
I				Amps
Z	5 + j0 5 ∠ 0°	0 - j26.5258 26.5258 ∠ -90°		Ohms

This being a parallel circuit now, we know that voltage is shared equally by all components, so we can place the figure for total voltage (10 volts $\angle\ 0^o$) in all the columns:

	R	C	Total	
E	**10 + j0** **10** $\angle$ 0°	**10 + j0** **10** $\angle$ 0°	10 + j0 10 $\angle$ 0°	Volts
I				Amps
Z	5 + j0 5 $\angle$ 0°	0 - j26.5258 26.5258 $\angle$ -90°		Ohms

Rule of parallel circuits:

$E_{total} = E_R = E_C$

Now we can apply Ohm's Law (I=E/Z) vertically to two columns in the table, calculating current through the resistor and current through the capacitor:

	R	C	Total	
E	10 + j0 10 $\angle$ 0°	10 + j0 10 $\angle$ 0°	10 + j0 10 $\angle$ 0°	Volts
I	**2 + j0** **2** $\angle$ 0°	**0 + j376.99m** **376.99m** $\angle$ 90°		Amps
Z	5 + j0 5 $\angle$ 0°	0 - j26.5258 26.5258 $\angle$ -90°		Ohms

Ohm's Law $I = \frac{E}{Z}$ *Ohm's Law* $I = \frac{E}{Z}$

Just as with DC circuits, branch currents in a parallel AC circuit add up to form the total current (Kirchhoff's Current Law again):

	R	C	Total	
E	10 + j0 10 $\angle$ 0°	10 + j0 10 $\angle$ 0°	10 + j0 10 $\angle$ 0°	Volts
I	2 + j0 2 $\angle$ 0°	0 + j376.99m 376.99m $\angle$ 90°	**2 + j376.99m** **2.0352** $\angle$ 10.675°	Amps
Z	5 + j0 5 $\angle$ 0°	0 - j26.5258 26.5258 $\angle$ -90°		Ohms

Rule of parallel circuits:

$I_{total} = I_R + I_C$

Finally, total impedance can be calculated by using Ohm's Law (Z=E/I) vertically in the "Total" column. As we saw in the AC inductance chapter, parallel impedance can also be calculated by using

a reciprocal formula identical to that used in calculating parallel resistances. It is noteworthy to mention that this parallel impedance rule holds true regardless of the kind of impedances placed in parallel. In other words, it doesn't matter if we're calculating a circuit composed of parallel resistors, parallel inductors, parallel capacitors, or some combination thereof: in the form of impedances (Z), all the terms are common and can be applied uniformly to the same formula. Once again, the parallel impedance formula looks like this:

$$Z_{parallel} = \frac{1}{\frac{1}{Z_1} + \frac{1}{Z_2} + \ldots \frac{1}{Z_n}}$$

The only drawback to using this equation is the significant amount of work required to work it out, especially without the assistance of a calculator capable of manipulating complex quantities. Regardless of how we calculate total impedance for our parallel circuit (either Ohm's Law or the reciprocal formula), we will arrive at the same figure:

	R	C	Total	
E	10 + j0 $10 \angle 0^o$	10 + j0 $10 \angle 0^o$	10 + j0 $10 \angle 0^o$	Volts
I	2 + j0 $2 \angle 0^o$	0 + j376.99m $376.99m \angle 90^o$	2 + j376.99m $2.0352 \angle 10.675^o$	Amps
Z	5 + j0 $5 \angle 0^o$	0 - j26.5258 $26.5258 \angle -90^o$	**4.8284 - j910.14m** **4.9135** $\angle$ -10.675^o	Ohms

Ohm's Law $Z = \frac{E}{I}$ *or* *Rule of parallel circuits:* $Z_{total} = \frac{1}{\frac{1}{Z_R} + \frac{1}{Z_C}}$

- **REVIEW:**
- Impedances (Z) are managed just like resistances (R) in parallel circuit analysis: parallel impedances diminish to form the total impedance, using the reciprocal formula. Just be sure to perform all calculations in complex (not scalar) form! $Z_{Total} = 1/(1/Z_1 + 1/Z_2 + \ldots 1/Z_n)$
- Ohm's Law for AC circuits: E = IZ ; I = E/Z ; Z = E/I
- When resistors and capacitors are mixed together in parallel circuits (just as in series circuits), the total impedance will have a phase angle somewhere between 0° and -90°. The circuit current will have a phase angle somewhere between 0° and $+90^o$.
- Parallel AC circuits exhibit the same fundamental properties as parallel DC circuits: voltage is uniform throughout the circuit, branch currents add to form the total current, and impedances diminish (through the reciprocal formula) to form the total impedance.

4.5 Capacitor quirks

As with inductors, the ideal capacitor is a purely reactive device, containing absolutely zero resistive (power dissipative) effects. In the real world, of course, nothing is so perfect. However, capacitors have the virtue of generally being *purer* reactive components than inductors. It is a lot easier to design and construct a capacitor with low internal series resistance than it is to do the same with an inductor. The practical result of this is that real capacitors typically have impedance phase angles more closely approaching 90° (actually, -90°) than inductors. Consequently, they will tend to dissipate less power than an equivalent inductor.

Capacitors also tend to be smaller and lighter weight than their equivalent inductor counterparts, and since their electric fields are almost totally contained between their plates (unlike inductors, whose magnetic fields naturally tend to extend beyond the dimensions of the core), they are less prone to transmitting or receiving electromagnetic "noise" to/from other components. For these reasons, circuit designers tend to favor capacitors over inductors wherever a design permits either alternative.

Capacitors with significant resistive effects are said to be *lossy*, in reference to their tendency to dissipate ("lose") power like a resistor. The source of capacitor loss is usually the dielectric material rather than any wire resistance, as wire length in a capacitor is very minimal.

Dielectric materials tend to react to changing electric fields by producing heat. This heating effect represents a loss in power, and is equivalent to resistance in the circuit. The effect is more pronounced at higher frequencies and in fact can be so extreme that it is sometimes exploited in manufacturing processes to heat insulating materials like plastic! The plastic object to be heated is placed between two metal plates, connected to a source of high-frequency AC voltage. Temperature is controlled by varying the voltage or frequency of the source, and the plates never have to contact the object being heated.

This effect is undesirable for capacitors where we expect the component to behave as a purely *reactive* circuit element. One of the ways to mitigate the effect of dielectric "loss" is to choose a dielectric material less susceptible to the effect. Not all dielectric materials are equally "lossy." A relative scale of dielectric loss from least to greatest is given here:

```
Vacuum --------------- (Low Loss)
Air
Polystyrene
Mica
Glass
Low-K ceramic
Plastic film (Mylar)
Paper
High-K ceramic
Aluminum oxide
Tantalum pentoxide --- (High Loss)
```

Dielectric resistivity manifests itself both as a series and a parallel resistance with the pure capacitance:

Equivalent circuit for a real capacitor

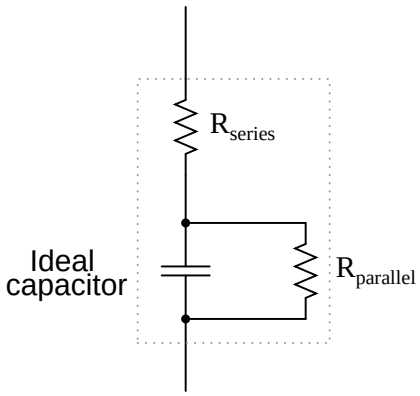

Fortunately, these stray resistances are usually of modest impact (low series resistance and high parallel resistance), much less significant than the stray resistances present in an average inductor.

Electrolytic capacitors, known for their relatively high capacitance and low working voltage, are also known for their notorious lossiness, due to both the characteristics of the microscopically thin dielectric film and the electrolyte paste. Unless specially made for AC service, electrolytic capacitors should never be used with AC unless it is mixed (biased) with a constant DC voltage preventing the capacitor from ever being subjected to reverse voltage. Even then, their resistive characteristics may be too severe a shortcoming for the application anyway.

Chapter 5

REACTANCE AND IMPEDANCE – R, L, AND C

5.1 Series R, L, and C

Let's take the following example circuit and analyze it:

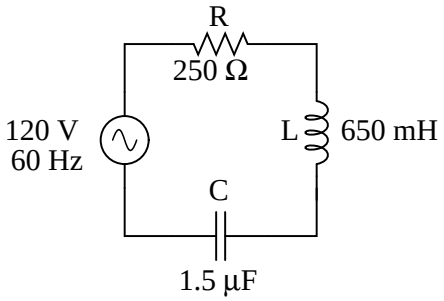

The first step is to determine the reactances (in ohms) for the inductor and the capacitor.

$X_L = 2\pi fL$

$X_L = (2)(\pi)(60\ \text{Hz})(650\ \text{mH})$

$X_L = 245.04\ \Omega$

$$X_C = \frac{1}{2\pi fC}$$

$$X_C = \frac{1}{(2)(\pi)(60\ \text{Hz})(1.5\ \mu\text{F})}$$

$X_C = 1.7684\ \text{k}\Omega$

The next step is to express all resistances and reactances in a mathematically common form: impedance. Remember that an inductive reactance translates into a positive imaginary impedance (or an impedance at $+90^o$), while a capacitive reactance translates into a negative imaginary impedance (impedance at -90°). Resistance, of course, is still regarded as a purely "real" impedance (polar angle of 0°):

$Z_R = 250 + j0\ \Omega$ *or* $250\ \Omega \angle 0^o$

$Z_L = 0 + j245.04\ \Omega$ *or* $245.04\ \Omega \angle 90^o$

$Z_C = 0 - j1.7684\text{k}\ \Omega$ *or* $1.7684\ \text{k}\Omega \angle -90^o$

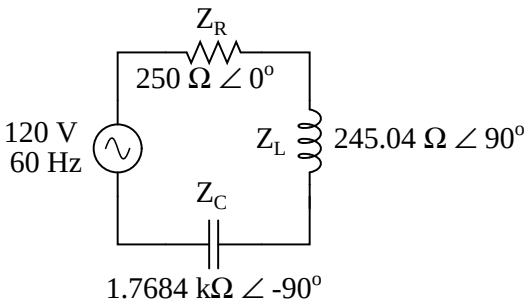

Now, with all quantities of opposition to electric current expressed in a common, complex number format (as impedances, and not as resistances or reactances), they can be handled in the same way as plain resistances in a DC circuit. This is an ideal time to draw up an analysis table for this circuit and insert all the "given" figures (total voltage, and the impedances of the resistor, inductor, and capacitor).

	R	L	C	Total	
E				**120 + j0** **120** $\angle$ 0°	Volts
I					Amps
Z	**250 + j0** **250** $\angle$ 0°	**0 + j245.04** **254.04** $\angle$ 90°	**0 - j1.7684k** **1.7684k** $\angle$ -90°		Ohms

Unless otherwise specified, the source voltage will be our reference for phase shift, and so will be written at an angle of 0°. Remember that there is no such thing as an "absolute" angle of phase shift for a voltage or current, since it's always a quantity relative to another waveform. Phase angles for impedance, however (like those of the resistor, inductor, and capacitor), are known absolutely, because the phase relationships between voltage and current at each component are absolutely defined.

Notice that I'm assuming a perfectly reactive inductor and capacitor, with impedance phase angles of exactly +90 and -90°, respectively. Although real components won't be perfect in this regard, they should be fairly close. For simplicity, I'll assume perfectly reactive inductors and capacitors from now on in my example calculations except where noted otherwise.

Since the above example circuit is a series circuit, we know that the total circuit impedance is equal to the sum of the individuals, so:

$$Z_{total} = Z_R + Z_L + Z_C$$

$$Z_{total} = (250 + j0\ \Omega) + (0 + j245.04\ \Omega) + (0 - j1.7684k\ \Omega)$$

$$Z_{total} = 250 - j1.5233k\ \Omega \quad or \quad 1.5437\ k\Omega \angle -80.680^o$$

Inserting this figure for total impedance into our table:

	R	L	C	Total	
E				120 + j0 120 $\angle$ 0°	Volts
I					Amps
Z	250 + j0 250 $\angle$ 0°	0 + j245.04 254.04 $\angle$ 90°	0 - j1.7684k 1.7684k $\angle$ -90°	**250 - j1.5233k** **1.5437k** $\angle$ -80.680°	Ohms

Rule of series circuits:
$Z_{total} = Z_R + Z_L + Z_C$

We can now apply Ohm's Law (I=E/R) vertically in the "Total" column to find total current for this series circuit:

	R	L	C	Total	
E				120 + j0 120 ∠ 0°	Volts
I				**12.589m + 76.708m** **77.734m** ∠ 80.680°	Amps
Z	250 + j0 250 ∠ 0°	0 + j245.04 254.04 ∠ 90°	0 - j1.7684k 1.7684k ∠ -90°	250 - j1.5233k 1.5437k ∠ -80.680°	Ohms

Ohm's Law

$$I = \frac{E}{Z}$$

Being a series circuit, current must be equal through all components. Thus, we can take the figure obtained for total current and distribute it to each of the other columns:

	R	L	C	Total	
E				120 + j0 120 ∠ 0°	Volts
I	**12.589m + 76.708m** **77.734m** ∠ 80.680°	**12.589m + 76.708m** **77.734m** ∠ 80.680°	**12.589m + 76.708m** **77.734m** ∠ 80.680°	12.589m + 76.708m 77.734m ∠ 80.680°	Amps
Z	250 + j0 250 ∠ 0°	0 + j245.04 254.04 ∠ 90°	0 - j1.7684k 1.7684k ∠ -90°	250 - j1.5233k 1.5437k ∠ -80.680°	Ohms

Rule of series circuits:

$$I_{total} = I_R = I_L = I_C$$

Now we're prepared to apply Ohm's Law (E=IZ) to each of the individual component columns in the table, to determine voltage drops:

	R	L	C	Total	
E	**3.1472 + j19.177** **19.434** ∠ 80.680°	**-18.797 + j3.0848** **19.048** ∠ 170.68°	**135.65 - j22.262** **137.46** ∠ -9.3199°	120 + j0 120 ∠ 0°	Volts
I	12.589m + 76.708m 77.734m ∠ 80.680°	12.589m + 76.708m 77.734m ∠ 80.680°	12.589m + 76.708m 77.734m ∠ 80.680°	12.589m + 76.708m 77.734m ∠ 80.680°	Amps
Z	250 + j0 250 ∠ 0°	0 + j245.04 254.04 ∠ 90°	0 - j1.7684k 1.7684k ∠ -90°	250 - j1.5233k 1.5437k ∠ -80.680°	Ohms

Ohm's Law E = IZ | *Ohm's Law* E = IZ | *Ohm's Law* E = IZ

Notice something strange here: although our supply voltage is only 120 volts, the voltage across the capacitor is 137.46 volts! How can this be? The answer lies in the interaction between the inductive and capacitive reactances. Expressed as impedances, we can see that the inductor opposes current in a manner precisely opposite that of the capacitor. Expressed in rectangular form, the inductor's impedance has a positive imaginary term and the capacitor has a negative imaginary term. When these two contrary impedances are added (in series), they tend to cancel each other out! Although they're still *added together* to produce a sum, that sum is actually *less* than either of the individual (capacitive or inductive) impedances alone. It is analogous to adding together

a positive and a negative (scalar) number: the sum is a quantity less than either one's individual absolute value.

If the total impedance in a series circuit with both inductive and capacitive elements is less than the impedance of either element separately, then the total current in that circuit must be *greater* than what it would be with only the inductive or only the capacitive elements there. With this abnormally high current through each of the components, voltages greater than the source voltage may be obtained across some of the individual components! Further consequences of inductors' and capacitors' opposite reactances in the same circuit will be explored in the next chapter.

Once you've mastered the technique of reducing all component values to impedances (Z), analyzing any AC circuit is only about as difficult as analyzing any DC circuit, except that the quantities dealt with are vector instead of scalar. With the exception of equations dealing with power (P), equations in AC circuits are the same as those in DC circuits, using impedances (Z) instead of resistances (R). Ohm's Law (E=IZ) still holds true, and so do Kirchhoff's Voltage and Current Laws.

To demonstrate Kirchhoff's Voltage Law in an AC circuit, we can look at the answers we derived for component voltage drops in the last circuit. KVL tells us that the algebraic sum of the voltage drops across the resistor, inductor, and capacitor should equal the applied voltage from the source. Even though this may not look like it is true at first sight, a bit of complex number addition proves otherwise:

$E_R + E_L + E_C$ *should equal* E_{total}

$$\begin{array}{rrl} & 3.1472 + j19.177 \text{ V} & E_R \\ & -18.797 + j3.0848 \text{ V} & E_L \\ + & 135.65 - j22.262 \text{ V} & E_C \\ \hline & 120 + j0 \text{ V} & E_{total} \end{array}$$

Aside from a bit of rounding error, the sum of these voltage drops does equal 120 volts. Performed on a calculator (preserving all digits), the answer you will receive should be *exactly* 120 + j0 volts.

We can also use SPICE to verify our figures for this circuit:

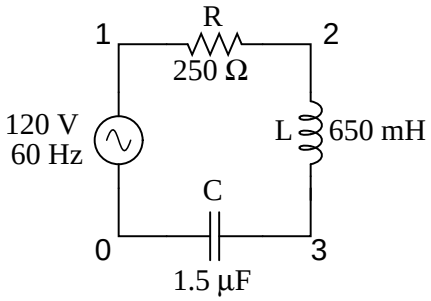


```
ac r-l-c circuit
v1 1 0 ac 120 sin
r1 1 2 250
```

```
l1 2 3 650m
c1 3 0 1.5u
.ac lin 1 60 60
.print ac v(1,2) v(2,3) v(3,0) i(v1)
.print ac vp(1,2) vp(2,3) vp(3,0) ip(v1)
.end

freq          v(1,2)      v(2,3)      v(3)        i(v1)
6.000E+01     1.943E+01   1.905E+01   1.375E+02   7.773E-02
freq          vp(1,2)     vp(2,3)     vp(3)       ip(v1)
6.000E+01     8.068E+01   1.707E+02  -9.320E+00  -9.932E+01
```

Interpreted SPICE results

$E_R = 19.43 \text{ V} \angle 80.68^o$

$E_L = 19.05 \text{ V} \angle 170.7^o$

$E_C = 137.5 \text{ V} \angle -9.320^o$

$I = 77.73 \text{ mA} \angle -99.32^o$ (*actual phase angle* = 80.68^o)

The SPICE simulation shows our hand-calculated results to be accurate.

As you can see, there is little difference between AC circuit analysis and DC circuit analysis, except that all quantities of voltage, current, and resistance (actually, *impedance*) must be handled in complex rather than scalar form so as to account for phase angle. This is good, since it means all you've learned about DC electric circuits applies to what you're learning here. The only exception to this consistency is the calculation of power, which is so unique that it deserves a chapter devoted to that subject alone.

- **REVIEW:**
- Impedances of any kind add in series: $Z_{Total} = Z_1 + Z_2 + \ldots Z_n$
- Although impedances add in series, the total impedance for a circuit containing both inductance and capacitance may be less than one or more of the individual impedances, because series inductive and capacitive impedances tend to cancel each other out. This may lead to voltage drops across components exceeding the supply voltage!
- All rules and laws of DC circuits apply to AC circuits, so long as values are expressed in complex form rather than scalar. The only exception to this principle is the calculation of *power*, which is very different for AC.

5.2 Parallel R, L, and C

We can take the same components from the series circuit and rearrange them into a parallel configuration for an easy example circuit:

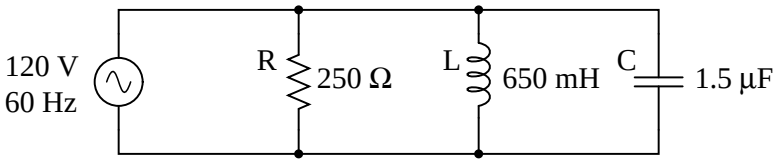

The fact that these components are connected in parallel instead of series now has absolutely no effect on their individual impedances. So long as the power supply is the same frequency as before, the inductive and capacitive reactances will not have changed at all:

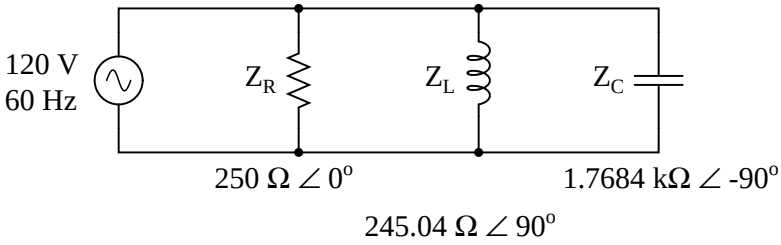

With all component values expressed as impedances (Z), we can set up an analysis table and proceed as in the last example problem, except this time following the rules of parallel circuits instead of series:

	R	L	C	Total	
E				**120 + j0** **120** ∠ 0°	Volts
I					Amps
Z	**250 + j0** **250** ∠ 0°	**0 + j245.04** **254.04** ∠ 90°	**0 - j1.7684k** **1.7684k** ∠ -90°		Ohms

Knowing that voltage is shared equally by all components in a parallel circuit, we can transfer the figure for total voltage to all component columns in the table:

	R	L	C	Total	
E	**120 + j0** **120** ∠ 0°	**120 + j0** **120** ∠ 0°	**120 + j0** **120** ∠ 0°	120 + j0 120 ∠ 0°	Volts
I					Amps
Z	250 + j0 250 ∠ 0°	0 + j245.04 254.04 ∠ 90°	0 - j1.7684k 1.7684k ∠ -90°		Ohms

Rule of parallel circuits:
$E_{total} = E_R = E_L = E_C$

Now, we can apply Ohm's Law (I=E/Z) vertically in each column to determine current through each component:

	R	L	C	Total	
E	120 + j0 120 ∠ 0°	120 + j0 120 ∠ 0°	120 + j0 120 ∠ 0°	120 + j0 120 ∠ 0°	Volts
I	**480m + j0** **480** ∠ 0°	**0 - j489.71m** **489.71m** ∠ -90°	**0 + j67.858m** **67.858m** ∠ 90°		Amps
Z	250 + j0 250 ∠ 0°	0 + j245.04 254.04 ∠ 90°	0 - j1.7684k 1.7684k ∠ -90°		Ohms

Ohm's Law $I = \frac{E}{Z}$ *Ohm's Law* $I = \frac{E}{Z}$ *Ohm's Law* $I = \frac{E}{Z}$

There are two strategies for calculating total current and total impedance. First, we could calculate total impedance from all the individual impedances in parallel ($Z_{Total} = 1/(1/Z_R + 1/Z_L + 1/Z_C)$), and then calculate total current by dividing source voltage by total impedance (I=E/Z). However, working through the parallel impedance equation with complex numbers is no easy task, with all the reciprocations (1/Z). This is especially true if you're unfortunate enough not to have a calculator that handles complex numbers and are forced to do it all by hand (reciprocate the individual Z's in polar form, then convert them all to rectangular form for addition, then convert back to polar form for the final inversion, then invert). The second way to calculate total current and total impedance is to add up all the branch currents to arrive at total current (total current in a parallel circuit – AC or DC – is equal to the sum of the branch currents), then use Ohm's Law to determine total impedance from total voltage and total current (Z=E/I).

	R	L	C	Total	
E	120 + j0 120 ∠ 0°	120 + j0 120 ∠ 0°	120 + j0 120 ∠ 0°	120 + j0 120 ∠ 0°	Volts
I	480m + j0 480 ∠ 0°	0 - j489.71m 489.71m ∠ -90°	0 + j67.858m 67.858m ∠ 90°	**480m - j421.85m** **639.03m** ∠ -41.311°	Amps
Z	250 + j0 250 ∠ 0°	0 + j245.04 254.04 ∠ 90°	0 - j1.7684k 1.7684k ∠ -90°	**141.05 + j123.96** **187.79** ∠ 41.311°	Ohms

Either method, performed properly, will provide the correct answers. Let's try analyzing this circuit with SPICE and see what happens:

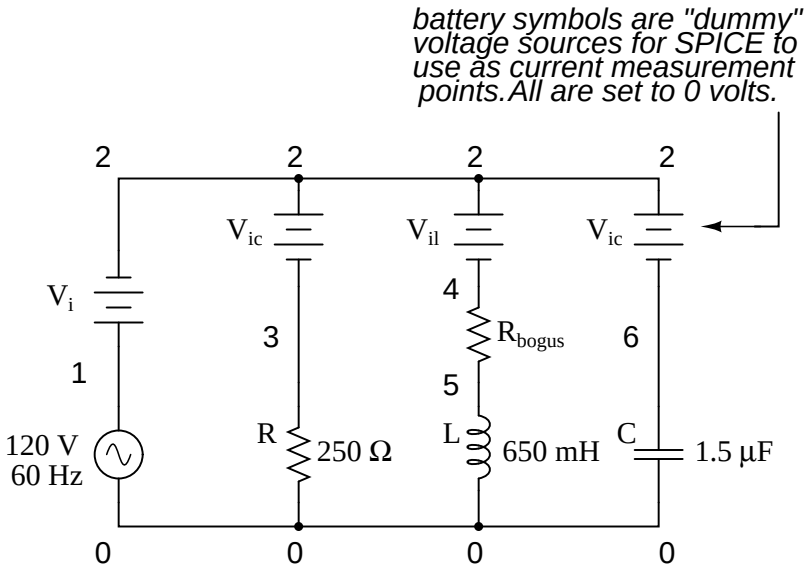


```
ac r-l-c circuit
v1 1 0 ac 120 sin
vi 1 2 ac 0
vir 2 3 ac 0
vil 2 4 ac 0
rbogus 4 5 1e-12
vic 2 6 ac 0
r1 3 0 250
l1 5 0 650m
c1 6 0 1.5u
.ac lin 1 60 60
.print ac i(vi) i(vir) i(vil) i(vic)
.print ac ip(vi) ip(vir) ip(vil) ip(vic)
.end
```

```
freq          i(vi)       i(vir)      i(vil)      i(vic)
6.000E+01     6.390E-01   4.800E-01   4.897E-01   6.786E-02
freq          ip(vi)      ip(vir)     ip(vil)     ip(vic)
6.000E+01    -4.131E+01   0.000E+00  -9.000E+01   9.000E+01
```

Interpreted SPICE results

I_{total} = 639.0 mA $\angle$ -41.31^o

I_R = 480 mA $\angle$ 0°

I_L = 489.7 mA $\angle$ -90°

I_C = 67.86 mA $\angle$ 90°

It took a little bit of trickery to get SPICE working as we would like on this circuit (installing "dummy" voltage sources in each branch to obtain current figures and installing the "dummy" resistor in the inductor branch to prevent a direct inductor-to-voltage source loop, which SPICE cannot tolerate), but we did get the proper readings. Even more than that, by installing the dummy voltage sources (current meters) in the proper directions, we were able to avoid that idiosyncrasy of SPICE of printing current figures 180° out of phase. This way, our current phase readings came out to exactly match our hand calculations.

5.3 Series-parallel R, L, and C

Now that we've seen how series and parallel AC circuit analysis is not fundamentally different than DC circuit analysis, it should come as no surprise that series-parallel analysis would be the same as well, just using complex numbers instead of scalar to represent voltage, current, and impedance.

Take this series-parallel circuit for example:

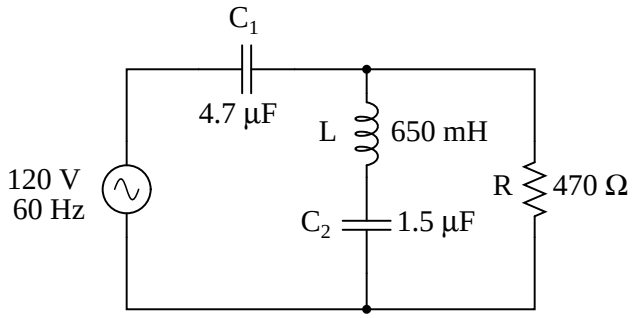

The first order of business, as usual, is to determine values of impedance (Z) for all components based on the frequency of the AC power source. To do this, we need to first determine values of reactance (X) for all inductors and capacitors, then convert reactance (X) and resistance (R) figures into proper impedance (Z) form:

Reactances and Resistances:

$X_{C1} = \frac{1}{2\pi f C_1}$ $X_{C1} = \frac{1}{(2)(\pi)(60\ \text{Hz})(4.7\ \mu\text{F})}$ $X_{C1} = 564.38\ \Omega$	$X_L = 2\pi f L$ $X_L = (2)(\pi)(60\ \text{Hz})(650\ \text{mH})$ $X_L = 245.04\ \Omega$
$X_{C2} = \frac{1}{2\pi f C_2}$ $X_{C2} = \frac{1}{(2)(\pi)(60\ \text{Hz})(1.5\ \mu\text{F})}$ $X_{C2} = 1.7684\ \text{k}\Omega$	$R = 470\ \Omega$

$Z_{C1} = 0 - j564.38\ \Omega$ *or* $564.38\ \Omega \angle -90^o$

$Z_L = 0 + j245.04\ \Omega$ *or* $245.04\ \Omega \angle 90^o$

$Z_{C2} = 0 - j1.7684\text{k}\ \Omega$ *or* $1.7684\ \text{k}\Omega \angle -90^o$

$Z_R = 470 + j0\ \Omega$ *or* $470\ \Omega \angle 0^o$

Now we can set up the initial values in our table:

	C_1	L	C_2	R	Total	
E					$120 + j0$ $120 \angle 0^o$	Volts
I						Amps
Z	$0 - j564.38$ $564.38 \angle -90^o$	$0 + j245.04$ $245.04 \angle 90^o$	$0 - j1.7684\text{k}$ $1.7684\text{k} \angle -90^o$	$470 + j0$ $470 \angle 0^o$		Ohms

Being a series-parallel *combination* circuit, we must reduce it to a total impedance in more than one step. The first step is to combine L and C_2 as a series combination of impedances, by adding their impedances together. Then, that impedance will be combined in parallel with the impedance of the resistor, to arrive at another combination of impedances. Finally, that quantity will be added to the impedance of C_1 to arrive at the total impedance.

In order that our table may follow all these steps, it will be necessary to add additional columns to it so that each step may be represented. Adding more columns horizontally to the table shown above would be impractical for formatting reasons, so I will place a new row of columns underneath, each column designated by its respective component combination:

	L -- C_2	R // (L -- C_2)	*Total* C_1 -- [R // (L -- C_2)]	
E				Volts
I				Amps
Z				Ohms

Calculating these new (combination) impedances will require complex addition for series combinations, and the "reciprocal" formula for complex impedances in parallel. This time, there is no avoidance of the reciprocal formula: the required figures can be arrived at no other way!

	L -- C_2	R // (L -- C_2)	*Total* C_1 -- [R // (L -- C_2)]	
E			120 + j0 $120 \angle 0^o$	Volts
I				Amps
Z	**0 - j1.5233k** **1.5233k** $\angle$ -90°	**429.15 - j132.41** **449.11** $\angle$ -17.147^o	**429.15 - j696.79** **818.34** $\angle$ -58.371^o	Ohms

Rule of series circuits:
$Z_{L\text{--}C2} = Z_L + Z_{C2}$

Rule of parallel circuits:
$$Z_{R//(L\text{--}C2)} = \frac{1}{\frac{1}{Z_R} + \frac{1}{Z_{L\text{--}C2}}}$$

Rule of series circuits:
$Z_{total} = Z_{C1} + Z_{R//(L\text{--}C2)}$

Seeing as how our second table contains a column for "Total," we can safely discard that column from the first table. This gives us one table with four columns and another table with three columns.

Now that we know the total impedance (818.34 $\Omega \angle$ -58.371^o) and the total voltage (120 volts $\angle$ 0°), we can apply Ohm's Law (I=E/Z) vertically in the "Total" column to arrive at a figure for total current:

	$L -- C_2$	$R // (L -- C_2)$	*Total* $C_1 -- [R // (L -- C_2)]$	
E			120 + j0 120 ∠ 0°	Volts
I			**76.899m + j124.86m** **146.64m** ∠ 58.371°	Amps
Z	0 - j1.5233k 1.5233k ∠ -90°	429.15 - j132.41 449.11 ∠ -17.147°	429.15 - j696.79 818.34 ∠ -58.371°	Ohms

Ohm's Law

$$I = \frac{E}{Z}$$

At this point we ask ourselves the question: are there any components or component combinations which share either the total voltage or the total current? In this case, both C_1 and the parallel combination $R//(L--C_2)$ share the same (total) current, since the total impedance is composed of the two sets of impedances in series. Thus, we can transfer the figure for total current into both columns:

	C_1	L	C_2	R	
E					Volts
I	**76.899m + j124.86m** **146.64m** ∠ 58.371°				Amps
Z	0 - j564.38 564.38 ∠ -90°	0 + j245.04 245.04 ∠ 90°	0 - j1.7684k 1.7684k ∠ -90°	470 + j0 470 ∠ 0°	Ohms

Rule of series circuits:

$$I_{total} = I_{C1} = I_{R//(L--C2)}$$

	$L -- C_2$	$R // (L -- C_2)$	*Total* $C_1 -- [R // (L -- C_2)]$	
E			120 + j0 120 ∠ 0°	Volts
I		**76.899m + j124.86m** **146.64m** ∠ 58.371°	76.899m + j124.86m 146.64m ∠ 58.371°	Amps
Z	0 - j1.5233k 1.5233k ∠ -90°	429.15 - j132.41 449.11 ∠ -17.147°	429.15 - j696.79 818.34 ∠ -58.371°	Ohms

Rule of series circuits:

$$I_{total} = I_{C1} = I_{R//(L--C2)}$$

Now, we can calculate voltage drops across C_1 and the series-parallel combination of $R//(L--C_2)$ using Ohm's Law (E=IZ) vertically in those table columns:

	C_1	L	C_2	R	
E	**70.467 - j43.400** **82.760** ∠ -31.629°				Volts
I	76.899m + j124.86m 146.64m ∠ 58.371°				Amps
Z	0 - j564.38 564.38 ∠ -90°	0 + j245.04 245.04 ∠ 90°	0 - j1.7684k 1.7684k ∠ -90°	470 + j0 470 ∠ 0°	Ohms

Ohm's Law
E = IZ

	L -- C_2	R // (L -- C_2)	*Total* C_1 -- [R // (L -- C_2)]	
E		**49.533 + j43.400** **65.857** ∠ 41.225°	120 + j0 120 ∠ 0°	Volts
I		76.899m + j124.86m 146.64m ∠ 58.371°	76.899m + j124.86m 146.64m ∠ 58.371°	Amps
Z	0 - j1.5233k 1.5233k ∠ -90°	429.15 - j132.41 449.11 ∠ -17.147°	429.15 - j696.79 818.34 ∠ -58.371°	Ohms

Ohm's Law
E = IZ

A quick double-check of our work at this point would be to see whether or not the voltage drops across C_1 and the series-parallel combination of R//(L−−C_2) indeed add up to the total. According to Kirchhoff's Voltage Law, they should!

E_{total} *should be equal to* $E_{C1} + E_{R//(L--C2)}$

$$\begin{array}{r} 70.467 - j43.400 \text{ V} \\ + \ 49.533 + j43.400 \text{ V} \\ \hline 120 + j0 \text{ V} \end{array} \quad \longleftarrow \textit{ Indeed, it is!}$$

That last step was merely a precaution. In a problem with as many steps as this one has, there is much opportunity for error. Occasional cross-checks like that one can save a person a lot of work and unnecessary frustration by identifying problems prior to the final step of the problem.

After having solved for voltage drops across C_1 and the combination R//(L−−C_2), we again ask ourselves the question: what other components share the same voltage or current? In this case, the resistor (R) and the combination of the inductor and the second capacitor (L−−C_2) share the same voltage, because those sets of impedances are in parallel with each other. Therefore, we can transfer the voltage figure just solved for into the columns for R and L−−C_2:

	C_1	L	C_2	R	
E	70.467 - j43.400 82.760 ∠ -31.629°			**49.533 + j43.400** **65.857** ∠ 41.225°	Volts
I	76.899m + j124.86m 146.64m ∠ 58.371°				Amps
Z	0 - j564.38 564.38 ∠ -90°	0 + j245.04 245.04 ∠ 90°	0 - j1.7684k 1.7684k ∠ -90°	470 + j0 470 ∠ 0°	Ohms

Rule of parallel circuits:

$E_{R//(L--C2)} = E_R = E_{L--C2}$

	$L -- C_2$	$R // (L -- C_2)$	*Total* $C_1 -- [R // (L -- C_2)]$	
E	**49.533 + j43.400** **65.857** ∠ 41.225°	49.533 + j43.400 65.857 ∠ 41.225°	120 + j0 120 ∠ 0°	Volts
I		76.899m + j124.86m 146.64m ∠ 58.371°	76.899m + j124.86m 146.64m ∠ 58.371°	Amps
Z	0 - j1.5233k 1.5233k ∠ -90°	429.15 - j132.41 449.11 ∠ -17.147°	429.15 - j696.79 818.34 ∠ -58.371°	Ohms

Rule of parallel circuits:

$E_{R//(L--C2)} = E_R = E_{L--C2}$

Now we're all set for calculating current through the resistor and through the series combination $L--C_2$. All we need to do is apply Ohm's Law (I=E/Z) vertically in both of those columns:

	C_1	L	C_2	R	
E	70.467 - j43.400 82.760 ∠ -31.629°			49.533 + j43.400 65.857 ∠ 41.225°	Volts
I	76.899m + j124.86m 146.64m ∠ 58.371°			**105.39m + j92.341m** **140.12m** ∠ 41.225°	Amps
Z	0 - j564.38 564.38 ∠ -90°	0 + j245.04 245.04 ∠ 90°	0 - j1.7684k 1.7684k ∠ -90°	470 + j0 470 ∠ 0°	Ohms

Ohm's Law

$$I = \frac{E}{Z}$$

	L -- C_2	R // (L -- C_2)	*Total* C_1 -- [R // (L -- C_2)]	
E	49.533 + j43.400 65.857 ∠ 41.225°	49.533 + j43.400 65.857 ∠ 41.225°	120 + j0 120 ∠ 0°	Volts
I	**-28.490m + j32.516m** **43.232m** ∠ 131.22°	76.899m + j124.86m 146.64m ∠ 58.371°	76.899m + j124.86m 146.64m ∠ 58.371°	Amps
Z	0 - j1.5233k 1.5233k ∠ -90°	429.15 - j132.41 449.11 ∠ -17.147°	429.15 - j696.79 818.34 ∠ -58.371°	Ohms

Ohm's Law

$$I = \frac{E}{Z}$$

Another quick double-check of our work at this point would be to see if the current figures for $L--C_2$ and R add up to the total current. According to Kirchhoff's Current Law, they should:

$I_{R//(L--C2)}$ *should be equal to* $I_R + I_{(L--C2)}$

$$\begin{array}{r} 105.39\text{m} + j92.341\text{m} \\ + \quad -28.490\text{m} + j32.516\text{m} \\ \hline 76.899\text{m} + j124.86\text{m} \end{array} \longleftarrow \textit{Indeed, it is!}$$

Since the L and C_2 are connected in series, and since we know the current through their series combination impedance, we can distribute that current figure to the L and C_2 columns following the rule of series circuits whereby series components share the same current:

	C_1	L	C_2	R	
E	70.467 - j43.400 82.760 ∠ -31.629°			49.533 + j43.400 65.857 ∠ 41.225°	Volts
I	76.899m + j124.86m 146.64m ∠ 58.371°	**-28.490m + j32.516m** **43.232m** ∠ 131.22°	**-28.490m + j32.516m** **43.232m** ∠ 131.22°	105.39m + j92.341m 140.12m ∠ 41.225°	Amps
Z	0 - j564.38 564.38 ∠ -90°	0 + j245.04 245.04 ∠ 90°	0 - j1.7684k 1.7684k ∠ -90°	470 + j0 470 ∠ 0°	Ohms

Rule of series circuits:
$I_{L--C2} = I_L = I_{C2}$

With one last step (actually, two calculations), we can complete our analysis table for this circuit. With impedance and current figures in place for L and C_2, all we have to do is apply Ohm's Law (E=IZ) vertically in those two columns to calculate voltage drops.

	C_1	L	C_2	R	
E	70.467 - j43.400 82.760 ∠ -31.629°	**-7.968 - j6.981** **10.594** ∠ 221.22°	**57.501 + j50.382** **76.451** ∠ 41.225	49.533 + j43.400 65.857 ∠ 41.225°	Volts
I	76.899m + j124.86m 146.64m ∠ 58.371°	-28.490m + j32.516m 43.232m ∠ 131.22°	-28.490m + j32.516m 43.232m ∠ 131.22°	105.39m + j92.341m 140.12m ∠ 41.225°	Amps
Z	0 - j564.38 564.38 ∠ -90°	0 + j245.04 245.04 ∠ 90°	0 - j1.7684k 1.7684k ∠ -90°	470 + j0 470 ∠ 0°	Ohms

Ohm's Law E = IZ — *Ohm's Law* E = IZ

Now, let's turn to SPICE for a computer verification of our work:

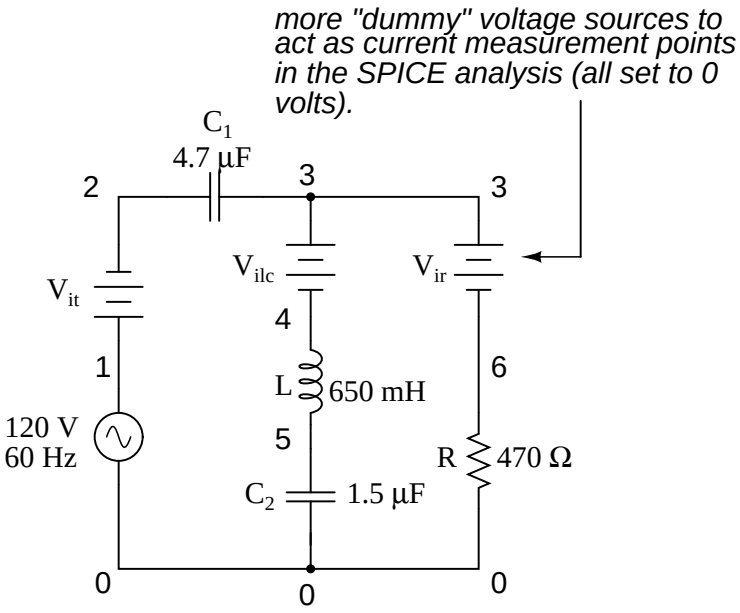


```
ac series-parallel r-l-c circuit
v1 1 0 ac 120 sin
vit 1 2 ac 0
vilc 3 4 ac 0
vir 3 6 ac 0
c1 2 3 4.7u
l 4 5 650m
c2 5 0 1.5u
r 6 0 470
.ac lin 1 60 60
.print ac v(2,3) vp(2,3) i(vit) ip(vit)
.print ac v(4,5) vp(4,5) i(vilc) ip(vilc)
.print ac v(5,0) vp(5,0) i(vilc) ip(vilc)
```

```
.print ac v(6,0) vp(6,0) i(vir) ip(vir)
.end

freq          v(2,3)      vp(2,3)     i(vit)      ip(vit)     C1
6.000E+01     8.276E+01  -3.163E+01   1.466E-01   5.837E+01
freq          v(4,5)      vp(4,5)     i(vilc)     ip(vilc)    L
6.000E+01     1.059E+01  -1.388E+02   4.323E-02   1.312E+02
freq          v(5)        vp(5)       i(vilc)     ip(vilc)    C2
6.000E+01     7.645E+01   4.122E+01   4.323E-02   1.312E+02
freq          v(6)        vp(6)       i(vir)      ip(vir)     R
6.000E+01     6.586E+01   4.122E+01   1.401E-01   4.122E+01
```

Each line of the SPICE output listing gives the voltage, voltage phase angle, current, and current phase angle for C_1, L, C_2, and R, in that order. As you can see, these figures do concur with our hand-calculated figures in the circuit analysis table.

As daunting a task as series-parallel AC circuit analysis may appear, it must be emphasized that there is nothing really new going on here besides the use of complex numbers. Ohm's Law (in its new form of E=IZ) still holds true, as do the voltage and current Laws of Kirchhoff. While there is more potential for human error in carrying out the necessary complex number calculations, the basic principles and techniques of series-parallel circuit reduction are exactly the same.

- **REVIEW:**

- Analysis of series-parallel AC circuits is much the same as series-parallel DC circuits. The only substantive difference is that all figures and calculations are in complex (not scalar) form.

- It is important to remember that before series-parallel reduction (simplification) can begin, you must determine the impedance (Z) of every resistor, inductor, and capacitor. That way, all component values will be expressed in common terms (Z) instead of an incompatible mix of resistance (R), inductance (L), and capacitance (C).

5.4 Summary

With the notable exception of calculations for power (P), all AC circuit calculations are based on the same general principles as calculations for DC circuits. The only significant difference is that fact that AC calculations use complex quantities while DC calculations use scalar quantities. Ohm's Law, Kirchhoff's Laws, and even the network theorems learned in DC still hold true for AC when voltage, current, and impedance are all expressed with complex numbers. The same troubleshooting strategies applied toward DC circuits also hold for AC, although AC can certainly be more difficult to work with due to phase angles which aren't registered by a handheld multimeter.

Power is another subject altogether, and will be covered in its own chapter in this book. Because power in a reactive circuit is both absorbed and released – not just dissipated as it is with resistors – its mathematical handling requires a more direct application of trigonometry to solve.

When faced with analyzing an AC circuit, the first step in analysis is to convert all resistor, inductor, and capacitor component values into impedances (Z), based on the frequency of the power

source. After that, proceed with the same steps and strategies learned for analyzing DC circuits, using the "new" form of Ohm's Law: E=IZ ; I=E/Z ; and Z=E/I

Remember that only the calculated figures expressed in *polar* form apply directly to empirical measurements of voltage and current. Rectangular notation is merely a useful tool for us to add and subtract complex quantities together. Polar notation, where the magnitude (length of vector) directly relates to the magnitude of the voltage or current measured, and the angle directly relates to the phase shift in degrees, is the most practical way to express complex quantities for circuit analysis.

Chapter 6

RESONANCE

6.1 An electric pendulum

Capacitors store energy in the form of an electric field, and electrically manifest that stored energy as a potential: *static voltage*. Inductors store energy in the form of a magnetic field, and electrically manifest that stored energy as a kinetic motion of electrons: *current*. Capacitors and inductors are flip-sides of the same reactive coin, storing and releasing energy in complementary modes. When these two types of reactive components are directly connected together, their complementary tendencies to store energy will produce an unusual result.

If either the capacitor or inductor starts out in a charged state, the two components will exchange energy between them, back and forth, creating their own AC voltage and current cycles. If we assume that both components are subjected to a sudden application of voltage (say, from a momentarily connected battery), the capacitor will very quickly charge and the inductor will oppose change in current, leaving the capacitor in the charged state and the inductor in the discharged state:

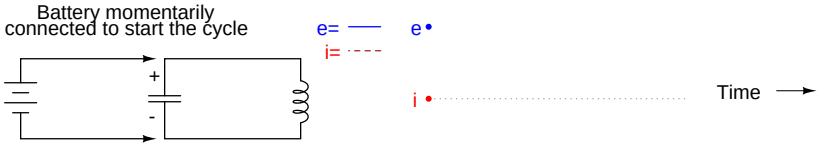

The capacitor will begin to discharge, its voltage decreasing. Meanwhile, the inductor will begin to build up a "charge" in the form of a magnetic field as current increases in the circuit:

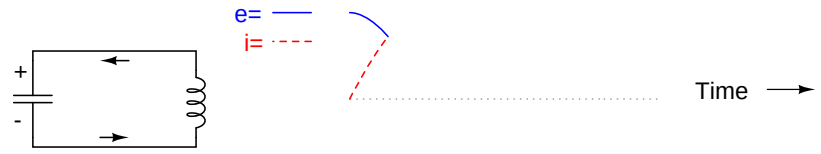

The inductor, still charging, will keep electrons flowing in the circuit until the capacitor has been completely discharged, leaving zero voltage across it:

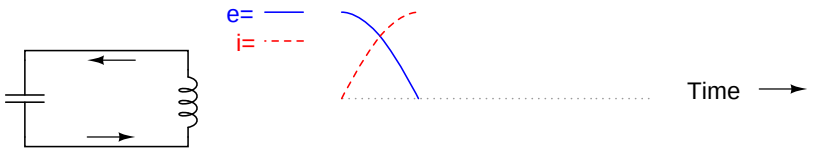

capacitor fully discharged: zero voltage
inductor fully charged: maximum current

The inductor will maintain current flow even with no voltage applied. In fact, it will generate a voltage (like a battery) in order to keep current in the same direction. The capacitor, being the recipient of this current, will begin to accumulate a charge in the opposite polarity as before:

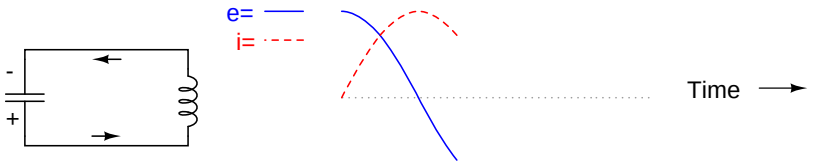

capacitor charging: voltage increasing (in opposite polarity)
inductor discharging: current decreasing

When the inductor is finally depleted of its energy reserve and the electrons come to a halt, the capacitor will have reached full (voltage) charge in the opposite polarity as when it started:

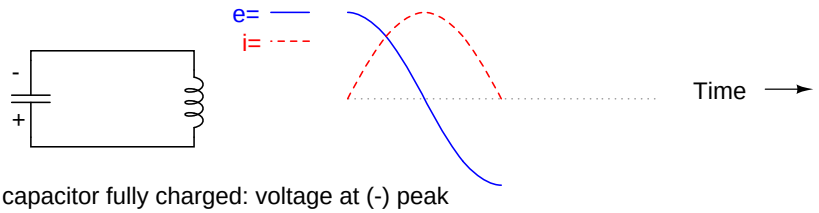

capacitor fully charged: voltage at (-) peak
inductor fully discharged: zero current

Now we're at a condition very similar to where we started: the capacitor at full charge and zero current in the circuit. The capacitor, as before, will begin to discharge through the inductor, causing an increase in current (in the opposite direction as before) and a decrease in voltage as it depletes its own energy reserve:

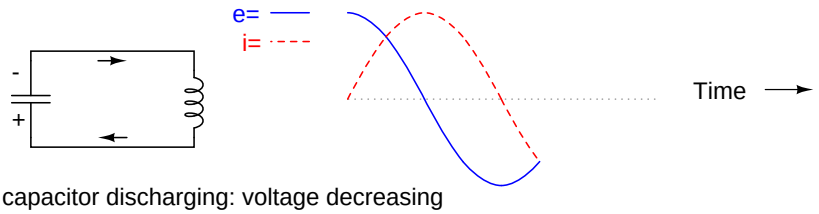

capacitor discharging: voltage decreasing
inductor charging: current increasing

Eventually the capacitor will discharge to zero volts, leaving the inductor fully charged with full current through it:

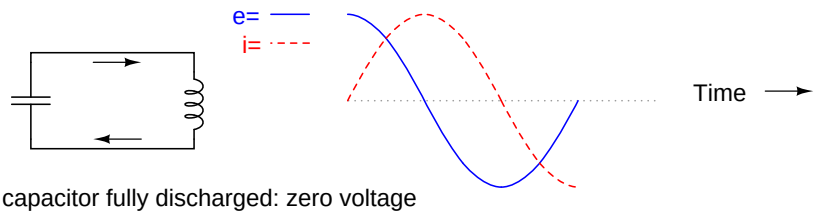

capacitor fully discharged: zero voltage
inductor fully charged: current at (-) peak

The inductor, desiring to maintain current in the same direction, will act like a source again, generating a voltage like a battery to continue the flow. In doing so, the capacitor will begin to charge up and the current will decrease in magnitude:

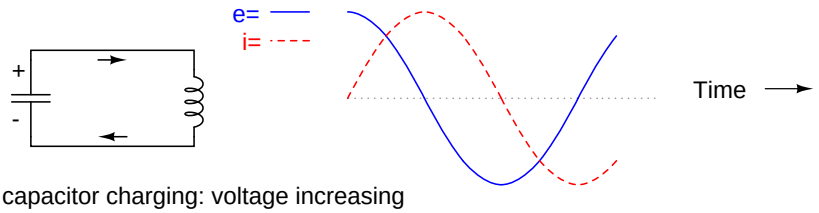

capacitor charging: voltage increasing
inductor discharging: current decreasing

Eventually the capacitor will become fully charged again as the inductor expends all of its energy reserves trying to maintain current. The voltage will once again be at its positive peak and the current at zero. This completes one full cycle of the energy exchange between the capacitor and inductor:

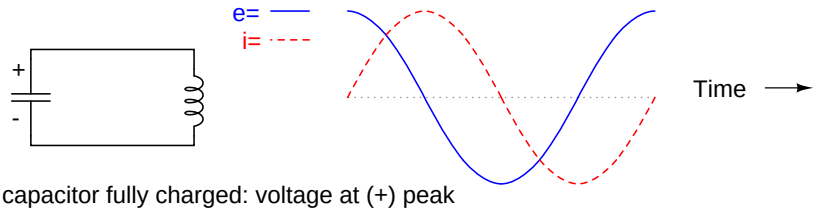

capacitor fully charged: voltage at (+) peak
inductor fully discharged: zero current

This oscillation will continue with steadily decreasing amplitude due to power losses from stray resistances in the circuit, until the process stops altogether. Overall, this behavior is akin to that of a pendulum: as the pendulum mass swings back and forth, there is a transformation of energy taking place from kinetic (motion) to potential (height), in a similar fashion to the way energy is transferred in the capacitor/inductor circuit back and forth in the alternating forms of current (kinetic motion of electrons) and voltage (potential electric energy).

At the peak height of each swing of a pendulum, the mass briefly stops and switches directions. It is at this point that potential energy (height) is at a maximum and kinetic energy (motion) is at zero. As the mass swings back the other way, it passes quickly through a point where the string is pointed straight down. At this point, potential energy (height) is at zero and kinetic energy (motion) is at maximum. Like the circuit, a pendulum's back-and-forth oscillation will continue with a steadily dampened amplitude, the result of air friction (resistance) dissipating energy. Also like the circuit, the pendulum's position and velocity measurements trace two sine waves (90 degrees out of phase) over time:

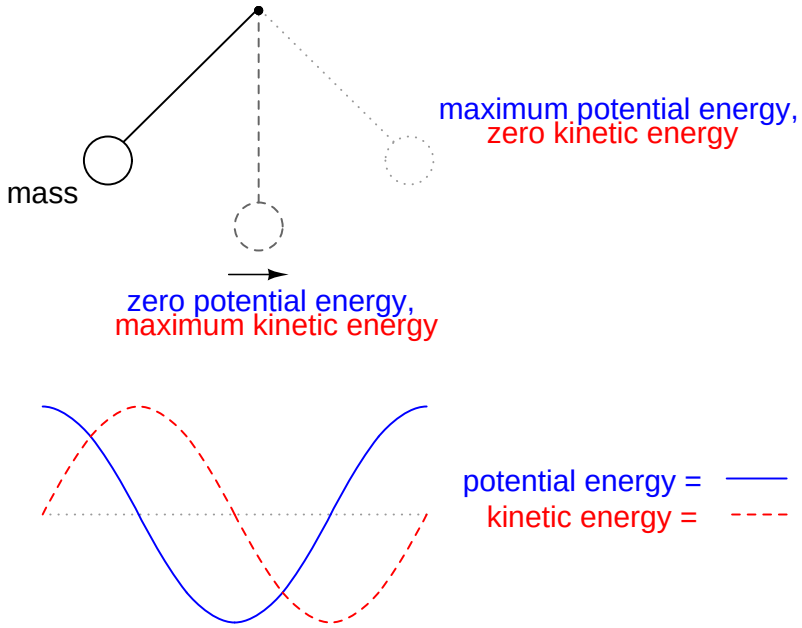

In physics, this kind of natural sine-wave oscillation for a mechanical system is called *Simple Harmonic Motion* (often abbreviated as "SHM"). The same underlying principles govern both the oscillation of a capacitor/inductor circuit and the action of a pendulum, hence the similarity in effect. It is an interesting property of any pendulum that its periodic time is governed by the length of the string holding the mass, and not the weight of the mass itself. That is why a pendulum will keep swinging at the same frequency as the oscillations decrease in amplitude. The oscillation rate is independent of the *amount* of energy stored in it.

The same is true for the capacitor/inductor circuit. The rate of oscillation is strictly dependent on the sizes of the capacitor and inductor, not on the amount of voltage (or current) at each respective peak in the waves. The ability for such a circuit to store energy in the form of oscillating voltage and current has earned it the name *tank circuit*. Its property of maintaining a single, natural frequency regardless of how much or little energy is actually being stored in it gives it special significance in electric circuit design.

However, this tendency to oscillate, or *resonate*, at a particular frequency is not limited to circuits exclusively designed for that purpose. In fact, nearly any AC circuit with a combination of capacitance and inductance (commonly called an "LC circuit") will tend to manifest unusual effects when the AC power source frequency approaches that natural frequency. This is true regardless of the circuit's intended purpose.

If the power supply frequency for a circuit exactly matches the natural frequency of the circuit's LC combination, the circuit is said to be in a state of *resonance*. The unusual effects will reach maximum in this condition of resonance. For this reason, we need to be able to predict what the resonant frequency will be for various combinations of L and C, and be aware of what the effects of resonance are.

- **REVIEW:**

- A capacitor and inductor directly connected together form something called a *tank circuit*, which oscillates (or *resonates*) at one particular frequency. At that frequency, energy is alternately shuffled between the capacitor and the inductor in the form of alternating voltage and current 90 degrees out of phase with each other.

- When the power supply frequency for an AC circuit exactly matches that circuit's natural oscillation frequency as set by the L and C components, a condition of *resonance* will have been reached.

6.2 Simple parallel (tank circuit) resonance

A condition of resonance will be experienced in a tank circuit when the reactances of the capacitor and inductor are equal to each other. Because inductive reactance increases with increasing frequency and capacitive reactance decreases with increasing frequency, there will only be one frequency where these two reactances will be equal.

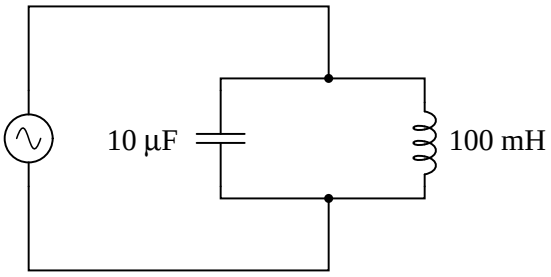

In the above circuit, we have a 10 μF capacitor and a 100 mH inductor. Since we know the equations for determining the reactance of each at a given frequency, and we're looking for that point where the two reactances are equal to each other, we can set the two reactance formulae equal to each other and solve for frequency algebraically:

$$X_L = 2\pi fL \qquad X_C = \frac{1}{2\pi fC}$$

. . . setting the two equal to each other, representing a condition of equal reactance (resonance) . . .

$$2\pi fL = \frac{1}{2\pi fC}$$

Multiplying both sides by f eliminates the f term in the denominator of the fraction . . .

$$2\pi f^2 L = \frac{1}{2\pi C}$$

Dividing both sides by $2\pi L$ leaves f^2 by itself on the left-hand side of the equation . . .

$$f^2 = \frac{1}{2\pi 2\pi LC}$$

Taking the square root of both sides of the equation leaves f by itself on the left side . . .

$$f = \frac{\sqrt{1}}{\sqrt{2\pi 2\pi LC}}$$

. . . simplifying . . .

$$\boxed{f = \frac{1}{2\pi \sqrt{LC}}}$$

So there we have it: a formula to tell us the resonant frequency of a tank circuit, given the values of inductance (L) in Henrys and capacitance (C) in Farads. Plugging in the values of L and C in our example circuit, we arrive at a resonant frequency of 159.155 Hz.

What happens at resonance is quite interesting. With capacitive and inductive reactances equal to each other, the total impedance increases to infinity, meaning that the tank circuit draws no current from the AC power source! We can calculate the individual impedances of the 10 μF capacitor and the 100 mH inductor and work through the parallel impedance formula to demonstrate this mathematically:

$$X_L = 2\pi fL$$

$$X_L = (2)(\pi)(159.155 \text{ Hz})(100 \text{ mH})$$

$$X_L = 100\ \Omega$$

$$X_C = \frac{1}{2\pi fC}$$

$$X_C = \frac{1}{(2)(\pi)(159.155 \text{ Hz})(10\ \mu\text{F})}$$

$$X_C = 100\ \Omega$$

As you might have guessed, I chose these component values to give resonance impedances that were easy to work with (100 Ω even). Now, we use the parallel impedance formula to see what happens to total Z:

$$Z_{parallel} = \frac{1}{\frac{1}{Z_L} + \frac{1}{Z_C}}$$

$$Z_{parallel} = \frac{1}{\frac{1}{100\ \Omega \angle 90^o} + \frac{1}{100\ \Omega \angle -90^o}}$$

$$Z_{parallel} = \frac{1}{0.01 \angle -90^o + 0.01 \angle 90^o}$$

$$Z_{parallel} = \frac{1}{0} \qquad \textit{Undefined!}$$

We can't divide any number by zero and arrive at a meaningful result, but we can say that the result approaches a value of *infinity* as the two parallel impedances get closer to each other. What this means in practical terms is that, the total impedance of a tank circuit is infinite (behaving as an *open circuit*) at resonance. We can plot the consequences of this over a wide power supply frequency range with a short SPICE simulation:

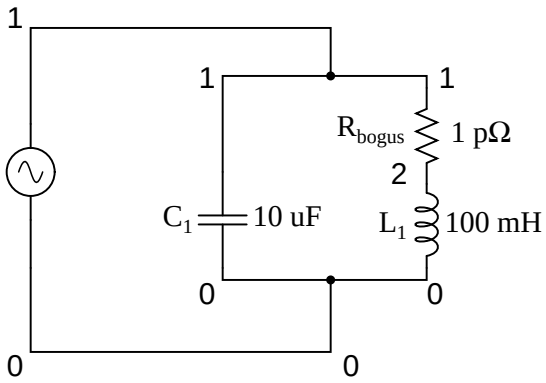


```
tank circuit frequency sweep
v1 1 0 ac 1 sin
c1 1 0 10u
* rbogus is necessary to eliminate a direct loop
* between v1 and l1, which SPICE can't handle
rbogus 1 2 1e-12
l1 2 0 100m
.ac lin 20 100 200
.plot ac i(v1)
.end
```

```
freq       i(v1)        3.162E-04   1.000E-03   3.162E-03  1.0E-02
- - - - - - - - - - - - - - - - - - - - - - - - - - - - - - - - - -
1.000E+02  9.632E-03 .       .           .           .          *
1.053E+02  8.506E-03 .       .           .           .        * .
1.105E+02  7.455E-03 .       .           .           .      *   .
1.158E+02  6.470E-03 .       .           .           .     *    .
1.211E+02  5.542E-03 .       .           .           .   *      .
1.263E+02  4.663E-03 .       .           .           . *        .
1.316E+02  3.828E-03 .       .           .           .*         .
1.368E+02  3.033E-03 .       .           .          *.          .
1.421E+02  2.271E-03 .       .           .       *   .          .
1.474E+02  1.540E-03 .       .           .    *      .          .
1.526E+02  8.373E-04 .       .         * .           .          .
1.579E+02  1.590E-04 . *     .           .           .          .
1.632E+02  4.969E-04 .       .    *      .           .          .
1.684E+02  1.132E-03 .       .           . *         .          .
1.737E+02  1.749E-03 .       .           .    *      .          .
1.789E+02  2.350E-03 .       .           .       *   .          .
1.842E+02  2.934E-03 .       .           .          *.          .
1.895E+02  3.505E-03 .       .           .           .*         .
1.947E+02  4.063E-03 .       .           .           .  *       .
2.000E+02  4.609E-03 .       .           .           .    *     .
```

- -

The 1 pico-ohm (1 pΩ) resistor is placed in this SPICE analysis to overcome a limitation of SPICE: namely, that it cannot analyze a circuit containing a direct inductor-voltage source loop. A very low resistance value was chosen so as to have minimal effect on circuit behavior.

This SPICE simulation plots circuit current over a frequency range of 100 to 200 Hz in twenty even steps (100 and 200 Hz inclusive). Current magnitude on the graph increases from left to right, while frequency increases from top to bottom. The current in this circuit takes a sharp dip around the analysis point of 157.9 Hz, which is the closest analysis point to our predicted resonance frequency of 159.155 Hz. It is at this point that total current from the power source falls to zero.

Incidentally, the graph output produced by this SPICE computer analysis is more generally known as a *Bode plot*. Such graphs plot amplitude or phase shift on one axis and frequency on the other. The steepness of a Bode plot curve characterizes a circuit's "frequency response," or how sensitive it is to changes in frequency.

- **REVIEW:**
- Resonance occurs when capacitive and inductive reactances are equal to each other.
- For a tank circuit with no resistance (R), resonant frequency can be calculated with the following formula:
- $$f_{resonant} = \frac{1}{2\pi\sqrt{LC}}$$
- The total impedance of a parallel LC circuit approaches infinity as the power supply frequency approaches resonance.
- A *Bode plot* is a graph plotting waveform amplitude or phase on one axis and frequency on the other.

6.3 Simple series resonance

A similar effect happens in series inductive/capacitive circuits. When a state of resonance is reached (capacitive and inductive reactances equal), the two impedances cancel each other out and the total impedance drops to zero!

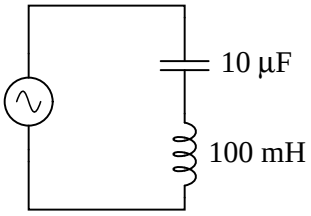

At 159.155 Hz:

$Z_L = 0 + j100\ \Omega$ $Z_C = 0 - j100\ \Omega$

$Z_{series} = Z_L + Z_C$

$Z_{series} = (0 + j100\ \Omega) + (0 - j100\ \Omega)$

$Z_{series} = 0\ \Omega$

With the total series impedance equal to 0 Ω at the resonant frequency of 159.155 Hz, the result is a *short circuit* across the AC power source at resonance. In the circuit drawn above, this would not be good. I'll add a small resistor in series along with the capacitor and the inductor to keep the maximum circuit current somewhat limited, and perform another SPICE analysis over the same range of frequencies:

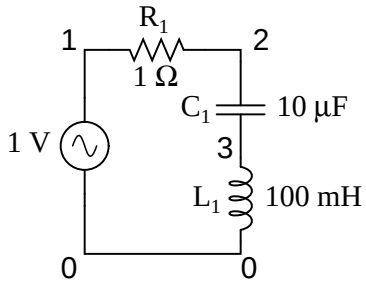


```
series lc circuit
v1 1 0 ac 1 sin
r1 1 2 1
c1 2 3 10u
l1 3 0 100m
.ac lin 20 100 200
.plot ac i(v1)
.end
```

```
freq       i(v1)           3.162E-02     1.000E-01  3.162E-01  1.0
- - - - - - - - - - - - - - - - - - - - - - - - - - - - - - - - -
1.000E+02  1.038E-02 *            .             .          .    .
1.053E+02  1.176E-02 . *          .             .          .    .
1.105E+02  1.341E-02 .   *        .             .          .    .
1.158E+02  1.545E-02 .    *       .             .          .    .
1.211E+02  1.804E-02 .      *     .             .          .    .
1.263E+02  2.144E-02 .        *   .             .          .    .
1.316E+02  2.611E-02 .           * .             .          .    .
1.368E+02  3.296E-02 .             .*            .          .    .
```

```
1.421E+02  4.399E-02 .             .   *         .         .    .
1.474E+02  6.478E-02 .             .        *    .         .    .
1.526E+02  1.186E-01 .             .             . *       .    .
1.579E+02  5.324E-01 .             .             .         . *  .
1.632E+02  1.973E-01 .             .             .   *     .    .
1.684E+02  8.797E-02 .             .           * .         .    .
1.737E+02  5.707E-02 .             .      *      .         .    .
1.789E+02  4.252E-02 .             .   *         .         .    .
1.842E+02  3.406E-02 .            .*             .         .    .
1.895E+02  2.852E-02 .          *.               .         .    .
1.947E+02  2.461E-02 .        *  .               .         .    .
2.000E+02  2.169E-02 .      *    .               .         .    .
- - - - - - - - - - - - - - - - - - - - - - - - - - - - - - - - -
```

As before, circuit current amplitude increases from left to right, while frequency increases from top to bottom. The peak is still seen to be at the plotted frequency point of 157.9 Hz, the closest analyzed point to our predicted resonance point of 159.155 Hz. This would suggest that our resonant frequency formula holds as true for simple series LC circuits as it does for simple parallel LC circuits, which is the case:

$$f_{resonant} = \frac{1}{2\pi\sqrt{LC}}$$

A word of caution is in order with series LC resonant circuits: because of the high currents which may be present in a series LC circuit at resonance, it is possible to produce dangerously high voltage drops across the capacitor and the inductor, as each component possesses significant impedance. We can edit the SPICE netlist in the above example to include a plot of voltage across the capacitor and inductor to demonstrate what happens:

```
series lc circuit
v1 1 0 ac 1 sin
r1 1 2 1
c1 2 3 10u
l1 3 0 100m
.ac lin 20 100 200
.plot ac i(v1) v(2,3) v(3)
.end

legend:
*: i(v1)
+: v(2,3)
=: v(3)
- - - - - - - - - - - - - - - - - - - - - - - - - - - - - - - - -
(*)---------- 1.000E-02     3.162E-02     1.000E-01    0.3162  1
- - - - - - - - - - - - - - - - - - - - - - - - - - - - - - - - -
(+)---------- 1.000E+00     3.162E+00     1.000E+01    31.62 100
```

```
- - - - - - - - - - - - - - - - - - - - - - - - - - - - - - - - - - - - - - - -
(=)----------- 1.000E-01     1.000E+00     1.000E+01     100 1000
- - - - - - - - - - - - - - - - - - - - - - - - - - - - - - - - - - - - - - - -
freq        i(v1)
- - - - - - - - - - - - - - - - - - - - - - - - - - - - - - - - - - - - - - - -
1.000E+02  1.038E-02 *     +    = .          .           .     .
1.053E+02  1.176E-02 . *    +    =.          .           .     .
1.105E+02  1.341E-02 .   *   +    =          .           .     .
1.158E+02  1.545E-02 .    *   +   .=         .           .     .
1.211E+02  1.804E-02 .      *   + . =        .           .     .
1.263E+02  2.144E-02 .        *  +.  =       .           .     .
1.316E+02  2.611E-02 .           *+    =     .           .     .
1.368E+02  3.296E-02 .            .*+   =    .           .     .
1.421E+02  4.399E-02 .            .   *+  =  .           .     .
1.474E+02  6.478E-02 .            .        *+=           .     .
1.526E+02  1.186E-01 .            .          .=*+        .     .
1.579E+02  5.324E-01 .            .          .       =   .   x .
1.632E+02  1.973E-01 .            .          .   = x     .     .
1.684E+02  8.797E-02 .            .        x =           .     .
1.737E+02  5.707E-02 .            .     +* = .           .     .
1.789E+02  4.252E-02 .            . + *  =   .           .     .
1.842E+02  3.406E-02 .           +.*   =     .           .     .
1.895E+02  2.852E-02 .         + *.   =      .           .     .
1.947E+02  2.461E-02 .      +  *  .   =      .           .     .
2.000E+02  2.169E-02 .     + *    .  =       .           .     .
- - - - - - - - - - - - - - - - - - - - - - - - - - - - - - - - - - - - - - - -
```

According to SPICE, voltage across the capacitor and inductor (plotted with "+" and "=" symbols, respectively) reach a peak somewhere between 100 and 1000 volts (marked by the "x" where the graphs overlap)! This is quite impressive for a power supply that only generates 1 volt. Needless to say, caution is in order when experimenting with circuits such as this.

- **REVIEW:**
- The total impedance of a series LC circuit approaches zero as the power supply frequency approaches resonance.
- The same formula for determining resonant frequency in a simple tank circuit applies to simple series circuits as well.
- Extremely high voltages can be formed across the individual components of series LC circuits at resonance, due to high current flows and substantial individual component impedances.

6.4 Applications of resonance

So far, the phenomenon of resonance appears to be a useless curiosity, or at most a nuisance to be avoided (especially if series resonance makes for a short-circuit across our AC voltage source!).

However, this is not the case. Resonance is a very valuable property of reactive AC circuits, employed in a variety of applications.

One use for resonance is to establish a condition of stable frequency in circuits designed to produce AC signals. Usually, a parallel (tank) circuit is used for this purpose, with the capacitor and inductor directly connected together, exchanging energy between each other. Just as a pendulum can be used to stabilize the frequency of a clock mechanism's oscillations, so can a tank circuit be used to stabilize the electrical frequency of an AC *oscillator* circuit. As was noted before, the frequency set by the tank circuit is solely dependent upon the values of L and C, and not on the magnitudes of voltage or current present in the oscillations:

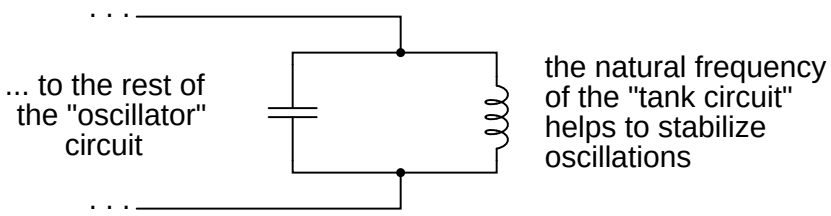

Another use for resonance is in applications where the effects of greatly increased or decreased impedance at a particular frequency is desired. A resonant circuit can be used to "block" (present high impedance toward) a frequency or range of frequencies, thus acting as a sort of frequency "filter" to strain certain frequencies out of a mix of others. In fact, these particular circuits are called *filters*, and their design constitutes a discipline of study all by itself:

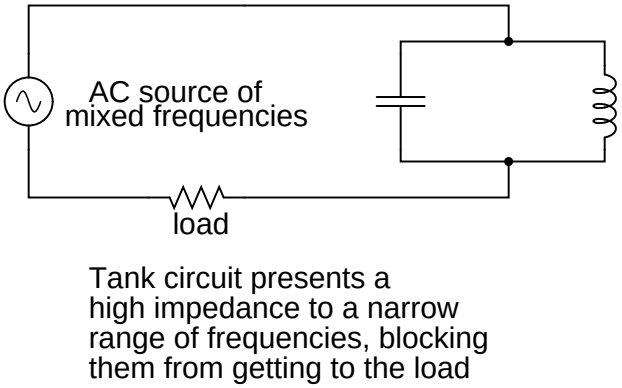

In essence, this is how analog radio receiver tuner circuits work to filter, or select, one station frequency out of the mix of different radio station frequency signals intercepted by the antenna.

- **REVIEW:**
- Resonance can be employed to maintain AC circuit oscillations at a constant frequency, just as a pendulum can be used to maintain constant oscillation speed in a timekeeping mechanism.
- Resonance can be exploited for its impedance properties: either dramatically increasing or decreasing impedance for certain frequencies. Circuits designed to screen certain frequencies out of a mix of different frequencies are called *filters*.

6.5 Resonance in series-parallel circuits

In simple reactive circuits with little or no resistance, the effects of radically altered impedance will manifest at the resonance frequency predicted by the equation given earlier. In a parallel (tank) LC circuit, this means infinite impedance at resonance. In a series LC circuit, it means zero impedance at resonance:

$$f_{resonant} = \frac{1}{2\pi\sqrt{LC}}$$

However, as soon as significant levels of resistance are introduced into most LC circuits, this simple calculation for resonance becomes invalid. We'll take a look at several LC circuits with added resistance, using the same values for capacitance and inductance as before: 10 μF and 100 mH, respectively. According to our simple equation, the resonant frequency should be 159.155 Hz. Watch, though, where current reaches maximum or minimum in the following SPICE analyses:

Parallel LC with resistance in series with L

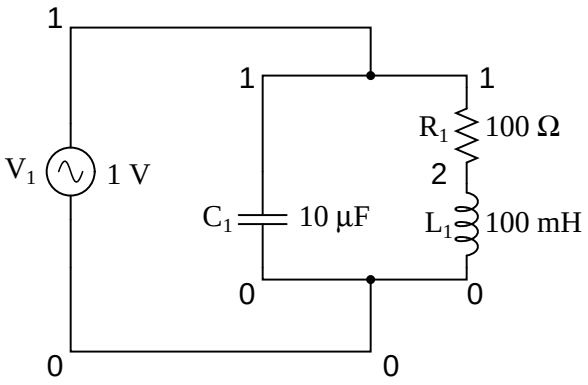


```
resonant circuit
v1 1 0 ac 1 sin
c1 1 0 10u
r1 1 2 100
l1 2 0 100m
.ac lin 20 100 200
.plot ac i(v1)
.end
```

```
freq       i(v1)           7.079E-03     7.943E-03     8.913E-03
- - - - - - - - - - - - - - - - - - - - - - - - - - - - - - - - -
1.000E+02  7.387E-03 .             .    *        .             .
1.053E+02  7.242E-03 .             .  *          .             .
1.105E+02  7.115E-03 .             .*            .             .
1.158E+02  7.007E-03 .            *.             .             .
```

```
1.211E+02  6.921E-03 .          *  .             .             .
1.263E+02  6.859E-03 .         *   .             .             .
1.316E+02  6.823E-03 .         *   .             .             .
1.368E+02  6.813E-03 .        *    .             .             .
1.421E+02  6.830E-03 .         *   .             .             .
1.474E+02  6.874E-03 .         *   .             .             .
1.526E+02  6.946E-03 .           * .             .             .
1.579E+02  7.044E-03 .            *.             .             .
1.632E+02  7.167E-03 .             .*            .             .
1.684E+02  7.315E-03 .             .   *         .             .
1.737E+02  7.485E-03 .             .      *      .             .
1.789E+02  7.676E-03 .             .         *   .             .
1.842E+02  7.886E-03 .             .            *.             .
1.895E+02  8.114E-03 .             .             .  *          .
1.947E+02  8.358E-03 .             .             .     *       .
2.000E+02  8.616E-03 .             .             .        *    .
- - - - - - - - - - - - - - - - - - - - - - - - - - - - - - - - -
Minimum current at 136.8 Hz instead of 159.2 Hz!
```

Parallel LC with resistance in series with C

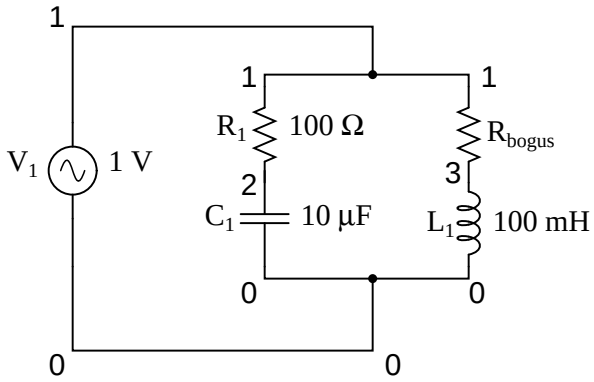

Here, an extra resistor (R_{bogus}) is necessary to prevent SPICE from encountering trouble in analysis. SPICE can't handle an inductor connected directly in parallel with any voltage source or any other inductor, so the addition of a series resistor is necessary to "break up" the voltage source/inductor loop that would otherwise be formed. This resistor is chosen to be a *very* low value for minimum impact on the circuit's behavior.

```
resonant circuit
v1 1 0 ac 1 sin
r1 1 2 100
c1 2 0 10u
rbogus 1 3 1e-12
l1 3 0 100m
```

```
.ac lin 20 100 400
.plot ac i(v1)
.end
```

```
freq       i(v1)            7.943E-03     1.000E-02     1.259E-02
- - - - - - - - - - - - - - - - - - - - - - - - - - - - - - - - -
1.000E+02  1.176E-02 .             .             .         *   .
1.158E+02  9.635E-03 .             .           * .             .
1.316E+02  8.257E-03 .             . *           .             .
1.474E+02  7.430E-03 .         *   .             .             .
1.632E+02  6.998E-03 .     *       .             .             .
1.789E+02  6.835E-03 .    *        .             .             .
1.947E+02  6.839E-03 .    *        .             .             .
2.105E+02  6.941E-03 .     *       .             .             .
2.263E+02  7.093E-03 .      *      .             .             .
2.421E+02  7.268E-03 .        *    .             .             .
2.579E+02  7.449E-03 .         *   .             .             .
2.737E+02  7.626E-03 .           * .             .             .
2.895E+02  7.794E-03 .            *.             .             .
3.053E+02  7.951E-03 .             *             .             .
3.211E+02  8.096E-03 .             .*            .             .
3.368E+02  8.230E-03 .             . *           .             .
3.526E+02  8.352E-03 .             .  *          .             .
3.684E+02  8.464E-03 .             .   *         .             .
3.842E+02  8.567E-03 .             .    *        .             .
4.000E+02  8.660E-03 .             .    *        .             .
- - - - - - - - - - - - - - - - - - - - - - - - - - - - - - - - -
Minimum current at roughly 180 Hz instead of 159.2 Hz!
```

Switching our attention to series LC circuits, we experiment with placing significant resistances in parallel with either L or C. In the following series circuit examples, a 1 Ω resistor (R_1) is placed in series with the inductor and capacitor to limit total current at resonance. The "extra" resistance inserted to influence resonant frequency effects is the 100 Ω resistor, R_2:

Series LC with resistance in parallel with L

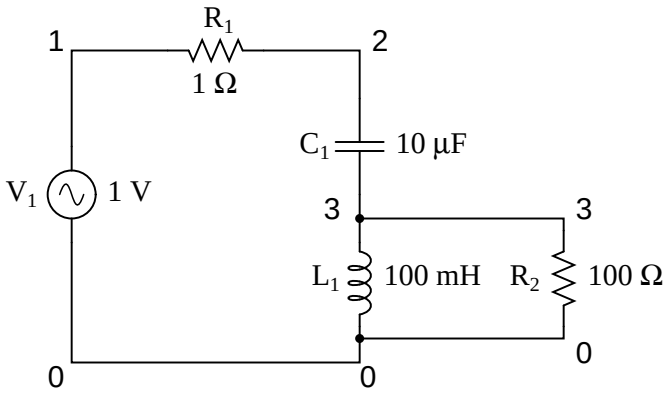


```
resonant circuit
v1 1 0 ac 1 sin
r1 1 2 1
c1 2 3 10u
l1 3 0 100m
r2 3 0 100
.ac lin 20 100 400
.plot ac i(v1)
.end
```

```
freq       i(v1)            1.000E-02     1.259E-02     1.585E-02
- - - - - - - - - - - - - - - - - - - - - - - - - - - - - - - - - -
1.000E+02  8.488E-03 .   *         .             .             .
1.158E+02  1.034E-02 .            . *           .             .
1.316E+02  1.204E-02 .            .           *  .             .
1.474E+02  1.336E-02 .            .              .   *         .
1.632E+02  1.415E-02 .            .              .      *      .
1.789E+02  1.447E-02 .            .              .       *     .
1.947E+02  1.445E-02 .            .              .       *     .
2.105E+02  1.424E-02 .            .              .      *      .
2.263E+02  1.393E-02 .            .              .     *       .
2.421E+02  1.360E-02 .            .              .    *        .
2.579E+02  1.327E-02 .            .              .  *          .
2.737E+02  1.296E-02 .            .              . *           .
2.895E+02  1.269E-02 .            .             *              .
3.053E+02  1.244E-02 .            .            *.              .
3.211E+02  1.222E-02 .            .           * .              .
3.368E+02  1.202E-02 .            .          *  .              .
3.526E+02  1.185E-02 .            .         *   .              .
3.684E+02  1.169E-02 .            .        *    .              .
```

```
3.842E+02  1.155E-02 .             .        *    .             .
4.000E+02  1.143E-02 .             .       *     .             .
- - - - - - - - - - - - - - - - - - - - - - - - - - - - - - - - -
Maximum current at roughly 178.9 Hz instead of 159.2 Hz!
```

And finally, a series LC circuit with the significant resistance in parallel with the capacitor:

Series LC with resistance in parallel with C

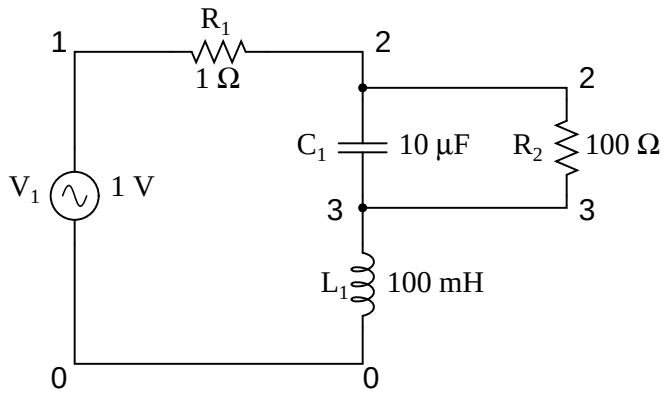


```
resonant circuit
v1 1 0 ac 1 sin
r1 1 2 1
c1 2 3 10u
r2 2 3 100
l1 3 0 100m
.ac lin 20 100 200
.plot ac i(v1)
.end

freq      i(v1)
freq       i(v1)           1.259E-02     1.413E-02     1.585E-02
- - - - - - - - - - - - - - - - - - - - - - - - - - - - - - - - -
1.000E+02  1.336E-02 .             .      *      .             .
1.053E+02  1.363E-02 .             .         *   .             .
1.105E+02  1.387E-02 .             .           * .             .
1.158E+02  1.408E-02 .             .             *             .
1.211E+02  1.426E-02 .             .             .*            .
1.263E+02  1.439E-02 .             .             . *           .
1.316E+02  1.447E-02 .             .             .  *          .
1.368E+02  1.450E-02 .             .             .  *          .
1.421E+02  1.447E-02 .             .             .  *          .
1.474E+02  1.438E-02 .             .             . *           .
```

```
1.526E+02  1.424E-02 .             .              .*            .
1.579E+02  1.405E-02 .             .            *.              .
1.632E+02  1.382E-02 .             .          *  .              .
1.684E+02  1.355E-02 .             .        *    .              .
1.737E+02  1.325E-02 .             .     *       .              .
1.789E+02  1.293E-02 .             .  *          .              .
1.842E+02  1.259E-02 .            *              .              .
1.895E+02  1.225E-02 .          *  .              .              .
1.947E+02  1.190E-02 .      *      .              .              .
2.000E+02  1.155E-02 .  *          .              .              .
- - - - - - - - - - - - - - - - - - - - - - - - - - - - - - - - -
Maximum current at 136.8 Hz instead of 159.2 Hz!
```

The tendency for added resistance to skew the point at which impedance reaches a maximum or minimum in an LC circuit is called *antiresonance*. The astute observer will notice a pattern between the four SPICE examples given above, in terms of how resistance affects the resonant peak of a circuit:

- **Parallel ("tank") LC circuit:**
- R in series with L: resonant frequency shifted *down*
- R in series with C: resonant frequency shifted *up*

- **Series LC circuit:**
- R in parallel with L: resonant frequency shifted *up*
- R in parallel with C: resonant frequency shifted *down*

Again, this illustrates the complementary nature of capacitors and inductors: how resistance in series with one creates an antiresonance effect equivalent to resistance in parallel with the other. If you look even closer to the four SPICE examples given, you'll see that the frequencies are shifted by the *same amount*, and that the shape of the complementary graphs are mirror-images of each other!

Antiresonance is an effect that resonant circuit designers must be aware of. The equations for determining antiresonance "shift" are complex, and will not be covered in this brief lesson. It should suffice the beginning student of electronics to understand that the effect exists, and what its general tendencies are.

Added resistance in an LC circuit is no academic matter. While it is possible to manufacture capacitors with negligible unwanted resistances, inductors are typically plagued with substantial amounts of resistance due to the long lengths of wire used in their construction. What is more, the resistance of wire tends to increase as frequency goes up, due to a strange phenomenon known as the *skin effect* where AC current tends to be excluded from travel through the very center of a wire, thereby reducing the wire's effective cross-sectional area. Thus, inductors not only have resistance, but *changing, frequency-dependent* resistance at that.

As if the resistance of an inductor's wire weren't enough to cause problems, we also have to contend with the "core losses" of iron-core inductors, which manifest themselves as added resistance in the circuit. Since iron is a conductor of electricity as well as a conductor of magnetic flux, changing flux produced by alternating current through the coil will tend to induce electric currents in the core itself (*eddy currents*). This effect can be thought of as though the iron core of the transformer were a sort of secondary transformer coil powering a resistive load: the less-than-perfect conductivity of the iron metal. This effects can be minimized with laminated cores, good core design and high-grade materials, but never completely eliminated.

One notable exception to the rule of circuit resistance causing a resonant frequency shift is the case of series resistor-inductor-capacitor ("RLC") circuits. So long as *all* components are connected in series with each other, the resonant frequency of the circuit will be unaffected by the resistance:

Series LC with resistance in series

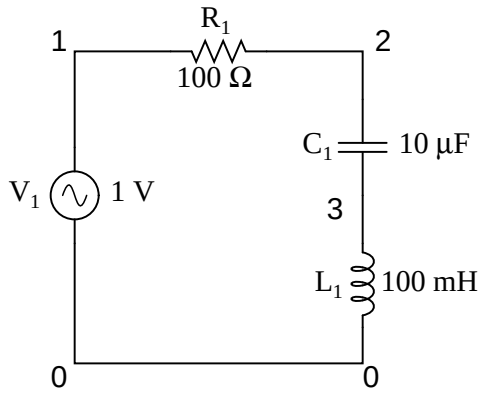


```
series rlc circuit
v1 1 0 ac 1 sin
r1 1 2 100
c1 2 3 10u
l1 3 0 100m
.ac lin 20 100 200
.plot ac i(v1)
.end
```

```
freq       i(v1)          7.943E-03     8.913E-03     1.000E-02
- - - - - - - - - - - - - - - - - - - - - - - - - - - - - - - -
1.000E+02  7.202E-03 *         .             .             .
1.053E+02  7.617E-03 .     *   .             .             .
1.105E+02  8.017E-03 .         .*            .             .
1.158E+02  8.396E-03 .         .      *      .             .
1.211E+02  8.747E-03 .         .           * .             .
1.263E+02  9.063E-03 .         .             . *           .
1.316E+02  9.339E-03 .         .             .     *       .
```

```
1.368E+02  9.570E-03 .         .              .         *     .
1.421E+02  9.752E-03 .         .              .           *   .
1.474E+02  9.883E-03 .         .              .             *.
1.526E+02  9.965E-03 .         .              .              .
1.579E+02  9.999E-03 .         .              .              *
1.632E+02  9.988E-03 .         .              .              *
1.684E+02  9.936E-03 .         .              .             *.
1.737E+02  9.850E-03 .         .              .           *  .
1.789E+02  9.735E-03 .         .              .          *   .
1.842E+02  9.595E-03 .         .              .        *     .
1.895E+02  9.437E-03 .         .              .      *       .
1.947E+02  9.265E-03 .         .              .    *         .
2.000E+02  9.082E-03 .         .              . *            .
- - - - - - - - - - - - - - - - - - - - - - - - - - - - - - - -
Maximum current at 159.2 Hz once again!
```

Note that the peak of the current graph has not changed from the earlier series LC circuit (the one with the 1 Ω token resistance in it), even though the resistance is now 100 times greater. The only thing that has changed is the "sharpness" of the curve. Obviously, this circuit does not resonate as strongly as one with less series resistance (it is said to be "less selective"), but at least it has the same natural frequency!

It is noteworthy that antiresonance has the effect of dampening the oscillations of free-running LC circuits such as tank circuits. In the beginning of this chapter we saw how a capacitor and inductor connected directly together would act something like a pendulum, exchanging voltage and current peaks just like a pendulum exchanges kinetic and potential energy. In a perfect tank circuit (no resistance), this oscillation would continue forever, just as a frictionless pendulum would continue to swing at its resonant frequency forever. But frictionless machines are difficult to find in the real world, and so are lossless tank circuits. Energy lost through resistance (or inductor core losses or radiated electromagnetic waves or . . .) in a tank circuit will cause the oscillations to decay in amplitude until they are no more. If enough energy losses are present in a tank circuit, it will fail to resonate at all.

Antiresonance's dampening effect is more than just a curiosity: it can be used quite effectively to eliminate *unwanted* oscillations in circuits containing stray inductances and/or capacitances, as almost all circuits do. Take note of the following L/R time delay circuit:

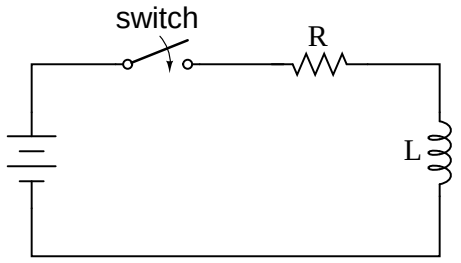

The idea of this circuit is simple: to "charge" the inductor when the switch is closed. The rate of inductor charging will be set by the ratio L/R, which is the time constant of the circuit in seconds. However, if you were to build such a circuit, you might find unexpected oscillations (AC) of voltage

across the inductor when the switch is closed. Why is this? There's no capacitor in the circuit, so how can we have resonant oscillation with just an inductor, resistor, and battery?

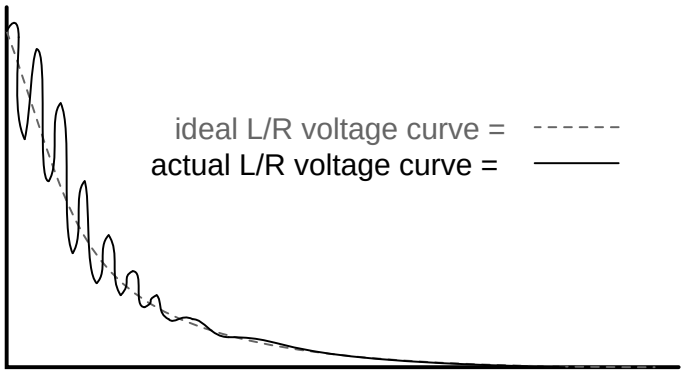

All inductors contain a certain amount of stray capacitance due to turn-to-turn and turn-to-core insulation gaps. Also, the placement of circuit conductors may create stray capacitance. While clean circuit layout is important in eliminating much of this stray capacitance, there will always be some that you cannot eliminate. If this causes resonant problems (unwanted AC oscillations), added resistance may be a way to combat it. If resistor R is large enough, it will cause a condition of antiresonance, dissipating enough energy to prohibit the inductance and stray capacitance from sustaining oscillations for very long.

Interestingly enough, the principle of employing resistance to eliminate unwanted resonance is one frequently used in the design of mechanical systems, where any moving object with mass is a potential resonator. A very common application of this is the use of shock absorbers in automobiles. Without shock absorbers, cars would bounce wildly at their resonant frequency after hitting any bump in the road. The shock absorber's job is to introduce a strong antiresonant effect by dissipating energy hydraulically (in the same way that a resistor dissipates energy electrically).

- **REVIEW:**
- Added resistance to an LC circuit can cause a condition known as *antiresonance*, where the peak impedance effects happen at frequencies other than that which gives equal capacitive and inductive reactances.
- Unwanted resistances inherent in real-world inductors can contribute greatly to conditions of antiresonance. One source of such resistance is the *skin effect*, caused by the exclusion of AC current from the center of conductors. Another source is that of *core losses* in iron-core inductors.
- In a simple series LC circuit containing resistance (an "RLC" circuit), resistance does *not* produce antiresonance. Resonance still occurs when capacitive and inductive reactances are equal.

```
4    --------- 4th harmonic
5    --------- 5th harmonic
6    --------- 6th harmonic
7    --------- 7th harmonic
ad infinitum
```

ometimes the term overtone is used to describe the a harmonic fre uency produced by a musical instrument. The rst overtone is the rst harmonic fre uency *re er n* the fundamental. f we had an instrument producing the entire range of harmonic fre uencies shown in the table above, the rst overtone would be the nd harmonic , while the second overtone would be 3 the 3rd harmonic , etc. owever, this application of the term overtone is speci c to particular instruments.

t so happens that certain instruments are incapable of producing certain types of harmonic fre uencies. For example, an instrument made from a tube that is open on one end and closed on the other such as a bottle, which produces sound when air is blown across the opening is incapable of producing even numbered harmonics. uch an instrument set up to produce a fundamental fre uency of would also produce fre uencies of 3 , , 7 , etc, but would *no* produce , 4 , , or any other even multiple fre uencies of the fundamental. As such, we would say that the rst overtone the rst fre uency greater than the fundamental in such an instrument would be 3 the 3rd harmonic , while the second overtone would be the th harmonic , and so on.

A pure sine wave single fre uency , being entirely devoid of any harmonics, sounds very flat and featureless to the human ear. ost musical instruments are incapable of producing sounds this simple. What gives each instrument its distinctive tone is the same phenomenon that gives each person a distinctive voice the uni ue blending of harmonic waveforms with each fundamental note, described by the physics of motion for each uni ue object producing the sound.

Brass instruments do not possess the same harmonic content as woodwind instruments, and neither produce the same harmonic content as stringed instruments. A distinctive blend of fre uencies is what gives a musical instrument its characteristic tone. As anyone who has played guitar can tell you, steel strings have a different sound than nylon strings. Also, the tone produced by a guitar string changes depending on where along its length it is plucked. These differences in tone, as well, are a result of different harmonic content produced by differences in the mechanical vibrations of an instrument's parts. All these instruments produce harmonic fre uencies whole number multiples of the fundamental fre uency when a single note is played, but the relative amplitudes of those harmonic fre uencies are different for different instruments. n musical terms, the measure of a tone's harmonic content is called *bre* or *color*.

usical tones become even more complex when the resonating element of an instrument is a two dimensional surface rather than a one dimensional string. nstruments based on the vibration of a string guitar, piano, banjo, lute, dulcimer, etc. or of a column of air in a tu be trumpet, flute, clarinet, tuba, pipe organ, etc. tend to produce sounds composed of a single fre uency the fundamental and a mix of harmonics. nstruments based on the vibration of a flat plate steel drums, and some types of bells , however, produce a much broader range of fre uencies, not limited to whole number multiples of the fundamental. The result is a distinctive tone that some people nd acoustically offensive.

As you can see, music provides a rich eld of study for mixed fre uencies and their effects. Later sections of this chapter will refer to musical instruments as sources of waveforms for analysis in more

detail.

- **REVIEW:**

- A *s n so l* waveform is one shaped exactly like a sine wave.

- A *non-s n so l* waveform can be anything from a distorted sine wave shape to something completely different like a s uare wave.

- ixed fre uency waveforms can be accidently created, purposely created, or simply exist out of necessity. ost musical tones, for instance, are not composed of a single fre uency sine wave, but are rich blends of different fre uencies.

- When multiple sine waveforms are mixed together as is often the case in music , the lowest fre uency sine wave is called the *n en l*, and the other sine waves whose fre uencies are whole number multiples of the fundamental wave are called *r on cs.*

- An *o er one* is a harmonic produced by a particular device. The rst overtone is the rst fre uency greater than the fundamental, while the second overtone is the next greater fre uency produced. uccessive overtones may or may not correspond to incremental harmonics, depending on the device producing the mixed fre uencies. ome devices and systems do not permit the establishment of certain harmonics, and so their overtones would only include some not all harmonic fre uencies.

2 Sq a e wave sig als

t has been found that *n* repeating, non sinusoidal waveform can be e uated to a combination of C voltage, sine waves, and or cosine waves sine waves with a 9 degree phase shift at various amplitudes and fre uencies. This is true no matter how strange or convoluted the waveform in uestion may be. o long as it repeats itself regularly over time, it is reducible to this series of sinusoidal waves. n particular, it has been found that s uare waves are mathematically e uivalent to the sum of a sine wave at that same fre uency, plus an in nite series of odd multiple fre uency sine waves at diminishing amplitude

1 V (peak) repeating square wave at 50 Hz is equivalent to:

$$\left(\frac{4}{\pi}\right)(\text{1 V peak sine wave at 50 Hz})$$
$$+ \left(\frac{4}{\pi}\right)(\text{1/3 V peak sine wave at 150 Hz})$$
$$+ \left(\frac{4}{\pi}\right)(\text{1/5 V peak sine wave at 250 Hz})$$
$$+ \left(\frac{4}{\pi}\right)(\text{1/7 V peak sine wave at 350 Hz})$$
$$+ \left(\frac{4}{\pi}\right)(\text{1/9 V peak sine wave at 450 Hz})$$
$$+ \textit{ . . . ad infinitum . . .}$$

This truth about waveforms at rst may seem too strange to believe. owever, if a s uare wave is actually an in nite series of sine wave harmonics added together, it stands to reason that we should be able to prove this by adding together several sine wave harmonics to produce a close approximation of a s uare wave. This reasoning is not only sound, but easily demonstrated with CE.

The circuit we'll be simulating is nothing more than several sine wave AC voltage sources of the proper amplitudes and fre uencies connected together in series. We'll use CE to plot the voltage waveforms across successive additions of voltage sources, like this

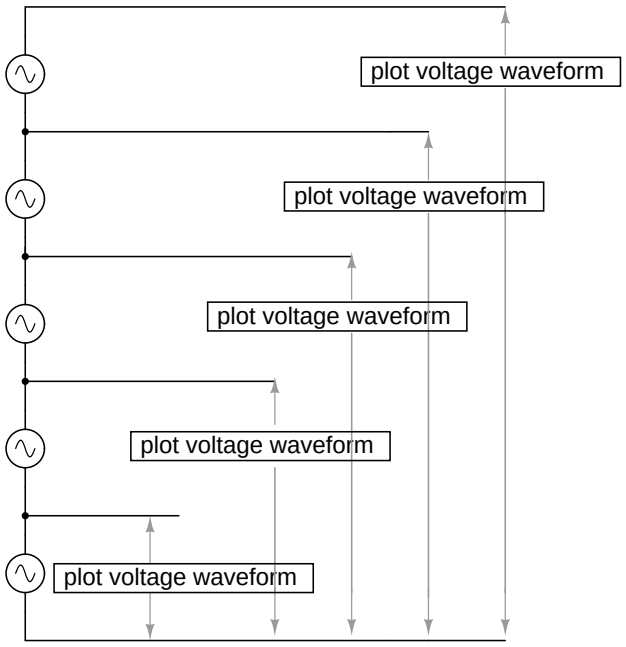

n this particular CE simulation, 've summed the st, 3rd, th, 7th, and 9th harmonic voltage sources in series for a total of ve AC voltage sources. The fundamental fre uency is and each harmonic is, of course, an integer multiple of that fre uency. The amplitude voltage gures are not random numbers; rather, they have been arrived at through the e uations shown in the fre uency series the fraction 4 π multiplied by , 3, , 7, etc. for each of the increasing odd harmonics .

```
building a squarewave
v      sin (   .27324 5     )        st harmonic (5    )
v3 2   sin (  424.4 3m  5     )     3rd harmonic
v5 3 2 sin (  254.648m 25     )     5th harmonic
v7 4 3 sin (   8 .89 m 35     )     7th harmonic
v9 5 4 sin (   4 .47 m 45     )     9th harmonic
r  5     k
.tran  m 2 m
.plot tran v( , )    Plot  st harmonic
.plot tran v(2, )    Plot  st + 3rd harmonics
.plot tran v(3, )    Plot  st + 3rd + 5th harmonics
.plot tran v(4, )    Plot  st + 3rd + 5th + 7th harmonics
.plot tran v(5, )    Plot  st + . . . + 9th harmonics
.end
```

'll narrate the analysis step by step from here, explaining what it is we're looking at. n this rst plot, we see the fundamental fre uency sine wave of by itself. t is nothing but a pure sine shape, with no additional harmonic content. This is the kind of waveform produced by an ideal AC power source

```
time       v( )          - .    +       .    +       .    +
- - - - - - - - - - - - - - - - - - - - - - - - - - - - - - - -
 .    +     .    +   .       .             *             .       .
 .    - 3  3.9 5 -   .       .             .    *        .       .
2.    - 3  7.4 4 -   .       .             .         *   .       .
3.    - 3   . 2  +   .       .             .             *       .
4.    - 3   . 99 +   .       .             .             .  *    .
5.    - 3   .26  +   .       .             .             .   *   .
6.    - 3   . 99 +   .       .             .             .  *    .
7.    - 3   . 2  +   .       .             .             *       .
8.    - 3  7.4 5 -   .       .             .         *   .       .
9.    - 3  3.89  -   .       .             .    *        .       .
 .    - 2 -5.8 9 - 4 .       .             *             .       .
 .    - 2 -3.9   -   .       .         *   .             .       .
 .2   - 2 -7.4 4 -   .       .    *        .             .       .
 .3   - 2 - . 2  +   .       *             .             .       .
 .4   - 2 - . 99 +   .     *  .             .             .       .
 .5   - 2 - .26  +   .    *   .             .             .       .
 .6   - 2 - . 99 +   .     *  .             .             .       .
 .7   - 2 - . 2  +   .       *             .             .       .
 .8   - 2 -7.4 5 -   .       .    *        .             .       .
 .9   - 2 -3.89  -   .       .         *   .             .       .
2.    - 2  5.8 9 - 4 .       .             *             .       .
- - - - - - - - - - - - - - - - - - - - - - - - - - - - - - - -
```

Next, we see what happens when this clean and simple waveform is combined with the third harmonic three times , or . uddenly, it doesn't look like a clean sine wave any more

```
time       v(2)          - .    +       .    +       .    +
- - - - - - - - - - - - - - - - - - - - - - - - - - - - - - - -
 .    +     .    +   .       .             *             .       .
 .    - 3  7. 99 -   .       .             .         *   .       .
2.    - 3   .  8 +   .       .             .             . *     .
3.    - 3   . 35 +   .       .             .             . *     .
4.    - 3  9.672 -   .       .             .             *       .
5.    - 3  8.73  -   .       .             .           * .       .
6.    - 3  9.75  -   .       .             .             *       .
7.    - 3   . 44 +   .       .             .             . *     .
8.    - 3   .    +   .       .             .             . *     .
9.    - 3  6.995 -   .       .             .         *   .       .
 .    - 2 -5.697 - 3 .       .             *             .       .
 .    - 2 -7. 66 -   .       .    *        .             .       .
 .2   - 2 - .  8 +   .     * .             .             .       .
 .3   - 2 - . 35 +   .     * .             .             .       .
 .4   - 2 -9.672 -   .       *             .             .       .
 .5   - 2 -8.73  -   .       . *           .             .       .
```

```
 .6   - 2 -9.75  -   .       *            .             .       .
 .7   - 2 - . 44 +   .     * .            .             .       .
 .8   - 2 - .    +   .     * .            .             .       .
 .9   - 2 -6.995 -   .       .   *        .             .       .
2.    - 2  5.697 - 3 .       .            *             .       .
- - - - - - - - - - - - - - - - - - - - - - - - - - - - - - - - -
```

The rise and fall times between positive and negative cycles are much steeper now, and the crests of the wave are closer to becoming flat like a s uarewave. Watch what happens as we add the next odd harmonic fre uency

```
time      v(3)
time       v(3)          - .    +       .    +        .    +
- - - - - - - - - - - - - - - - - - - - - - - - - - - - - - - - -
 .    +     .    +   .       .            *             .       .
 .    - 3  9.436 -   .       .            .            *.       .
2.    - 3   . 95 +   .       .            .             .*      .
3.    - 3  9.388 -   .       .            .            *.       .
4.    - 3  9.8 7 -   .       .            .             *       .
5.    - 3   . 69 +   .       .            .             .*      .
6.    - 3  9.6 6 -   .       .            .            *.       .
7.    - 3  9.479 -   .       .            .            *.       .
8.    - 3   . 24 +   .       .            .             . *     .
9.    - 3  8.957 -   .       .            .            *.       .
 .    - 2 - .925 - 2 .       .            *             .       .
 .    - 2 -9. 29 -   .       .*           .             .       .
 .2   - 2 - . 95 +   .      *.            .             .       .
 .3   - 2 -9.388 -   .       .*           .             .       .
 .4   - 2 -9.8 7 -   .       *            .             .       .
 .5   - 2 - . 69 +   .      *.            .             .       .
 .6   - 2 -9.6 6 -   .       .*           .             .       .
 .7   - 2 -9.479 -   .       .*           .             .       .
 .8   - 2 - . 24 +   .     * .            .             .       .
 .9   - 2 -8.957 -   .       .*           .             .       .
2.    - 2   .925 - 2 .       .            *             .       .
- - - - - - - - - - - - - - - - - - - - - - - - - - - - - - - - -
```

The most noticeable change here is how the crests of the wave have flattened even more. There are more several dips and crests at each end of the wave, but those dips and crests are smaller in amplitude than they were before. Watch again as we add the next odd harmonic waveform to the mix

```
time       v(4)           - .    +       .    +        .    +
- - - - - - - - - - - - - - - - - - - - - - - - - - - - - - - - -
 .    +     .    +   .       .            *             .       .
 .    - 3   . 55 +   .       .            .             .*      .
```

```
2.    - 3  9.86  -   .       .             .             *       .
3.    - 3  9.952 -   .       .             .             *       .
4.    - 3   . 23 +   .       .             .             *       .
5.    - 3  9.63  -   .       .             .            *.       .
6.    - 3   . 44 +   .       .             .             .*      .
7.    - 3  9.572 -   .       .             .            *.       .
8.    - 3   . 3  +   .       .             .             *       .
9.    - 3  9.962 -   .       .             .             *       .
 .    - 2 -4.396 - 2 .       .            *.             .       .
 .    - 2 -9.743 -   .       *             .             .       .
 .2   - 2 -9.86  -   .       *             .             .       .
 .3   - 2 -9.952 -   .       *             .             .       .
 .4   - 2 - . 23 +   .       *             .             .       .
 .5   - 2 -9.63  -   .       .*            .             .       .
 .6   - 2 - . 44 +   .      *.             .             .       .
 .7   - 2 -9.572 -   .       .*            .             .       .
 .8   - 2 - . 3  +   .       *             .             .       .
 .9   - 2 -9.962 -   .       *             .             .       .
2.    - 2  4.396 - 2 .       .             .*            .       .
- - - - - - - - - - - - - - - - - - - - - - - - - - - - - - - - - -
```

ere we can see the wave becoming flatter at each peak. Finally, adding the 9th harmonic, the fth sine wave voltage source in our circuit, we obtain this result

```
time       v(5)          - .    +       .    +       .    +
- - - - - - - - - - - - - - - - - - - - - - - - - - - - - - - - -
 .    +     .    +   .       .             *             .       .
 .    - 3   . 79 +   .       .             .             .*      .
2.    - 3  9.845 -   .       .             .             *       .
3.    - 3   .  7 +   .       .             .             *       .
4.    - 3  9.835 -   .       .             .             *       .
5.    - 3   .  7 +   .       .             .             *       .
6.    - 3  9.8 4 -   .       .             .             *       .
7.    - 3   . 23 +   .       .             .             *       .
8.    - 3  9.69  -   .       .             .             *       .
9.    - 3   . 48 +   .       .             .             .*      .
 .    - 2 -8.  3 - 2 .       .            *.             .       .
 .    - 2 -9.557 -   .       .*            .             .       .
 .2   - 2 -9.845 -   .       *             .             .       .
 .3   - 2 - .  7 +   .       *             .             .       .
 .4   - 2 -9.835 -   .       *             .             .       .
 .5   - 2 - .  7 +   .       *             .             .       .
 .6   - 2 -9.8 4 -   .       *             .             .       .
 .7   - 2 - . 23 +   .       *             .             .       .
 .8   - 2 -9.69  -   .       *             .             .       .
 .9   - 2 - . 48 +   .      *.             .             .       .
```

```
2.    - 2  8.  3 - 2 .       .             .*           .       .
- - - - - - - - - - - - - - - - - - - - - - - - - - - - - - - - -
```

The end result of adding the rst ve odd harmonic waveforms together all at the proper amplitudes, of course is a close approximation of a s uare wave. The point in doing this is to illustrate how we can build a s uare wave up from multiple sine waves at different fre uencies, to prove that a pure s uare wave is actually e uivalent to a *ser es* of sine waves. When a s uare wave AC voltage is applied to a circuit with reactive components capacitors and inductors , those components react as if they were being exposed to several sine wave voltages of different fre uencies, which in fact they are.

The fact that repeating, non sinusoidal waves are e uivalent to a de nite series of additive C voltage, sine waves, and or cosine waves is a conse uence of how waves work a fundamental property of all wave related phenomenon, electrical or otherwise. The mathematical process of reducing a non sinusoidal wave into these constituent fre uencies is called *Fo r er n l s s*, the details of which are well beyond the scope of this text. owever, computer algorithms have been created to perform this analysis at high speeds on real waveforms, and its application in AC power uality and signal analysis is widespread.

CE has the ability to sample a waveform and reduce it into its constituent sine wave harmonics by way of a *Fo r er Tr ns or* algorithm, outputting the fre uency analysis as a table of numbers. Let's try this on a s uare wave, which we already know is composed of odd harmonic sine waves

```
squarewave analysis netlist
v      pulse (-      . m . m   m 2 m)
r        k
.tran  m 4 m
.plot tran v( , )
.four 5  v( , )
.end
```

The *lse* option in the netlist line describing voltage source v instructs CE to simulate a s uare shaped pulse waveform, in this case one that is symmetrical e ual time for each half cycle and has a peak amplitude of volt. First we'll plot the s uare wave to be analy ed

```
time       v( )     -          - .5                    .5
- - - - - - - - - - - - - - - - - - - - - - - - - - - - - - - -
 .    +   - .    +   *         .           .           .         .
 .    - 3   .    +   .         .           .           .         *
2.    - 3   .    +   .         .           .           .         *
3.    - 3   .    +   .         .           .           .         *
4.    - 3   .    +   .         .           .           .         *
5.    - 3   .    +   .         .           .           .         *
6.    - 3   .    +   .         .           .           .         *
7.    - 3   .    +   .         .           .           .         *
8.    - 3   .    +   .         .           .           .         *
9.    - 3   .    +   .         .           .           .         *
 .    - 2   .    +   .         .           .           .         *
```

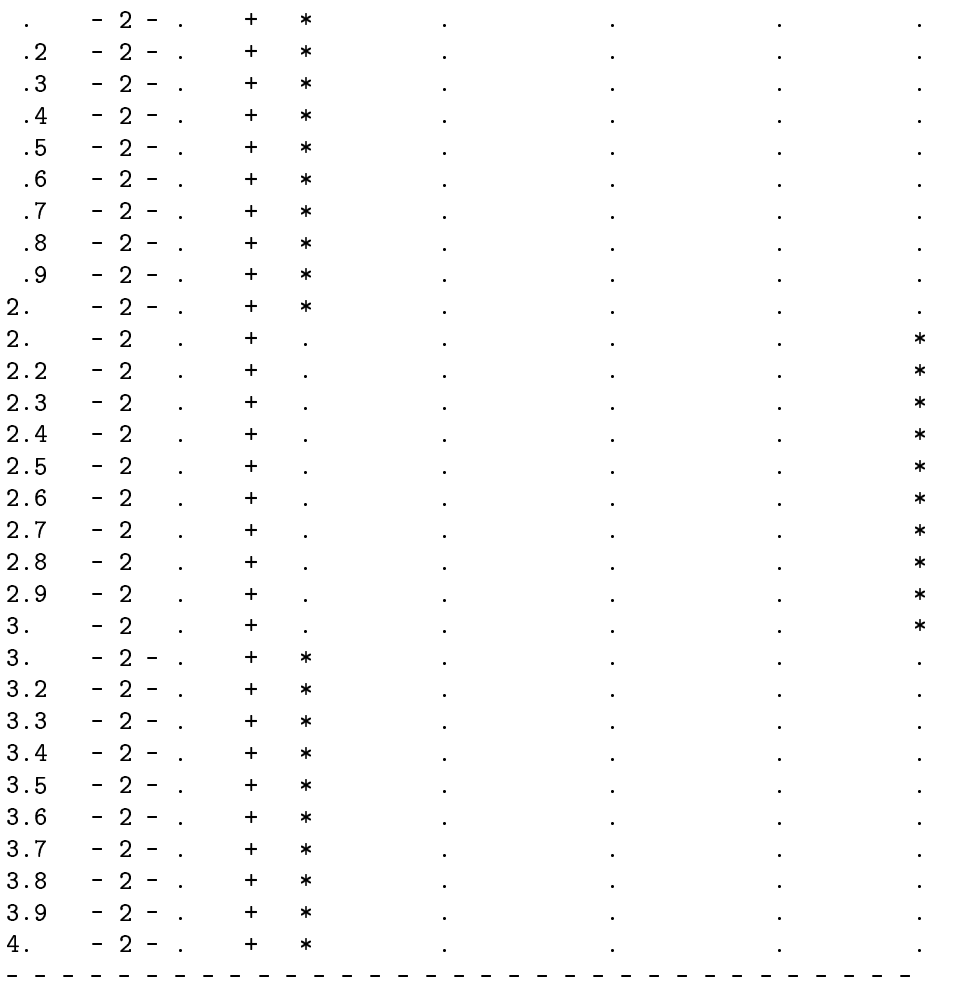

Next, we'll print the Fourier analysis generated by CE for this s uare wave

```
fourier components of transient response v( )
dc component =  -2.439 - 2
harmonic  frequency   fourier     normali ed   phase   normali ed
no          (h )      component    component    (deg)   phase (deg)
          5.    +      .274 +         .          -2. 95        .
2          .    + 2   4.892 - 2      . 384 5   -94.39      -92. 95
3          .5   + 2   4.253 -        .333987    -6.585      -4.39
4         2.    + 2   4.936 - 2      . 38757   -98.78      -96.585
5         2.5   + 2   2.562 -        .2   79   -  .976      -8.78
6         3.    + 2   5.    - 2      . 39337  -  3. 7     -   .976
7         3.5   + 2    .84  -        . 44549   - 5.366     - 3. 7
8         4.    + 2   5.  6 - 2      . 4  75  -  7.56     -  5.366
```

```
9         4.5   + 2    .443 -        .  33 6   - 9.756     - 7.56
total harmonic distortion =     43.8 5747  percent
```

ere, CE has broken the waveform down into a spectrum of sinusoidal fre uencies up to the ninth harmonic, plus a small C voltage labelled `D component.` had to inform CE of the fundamental fre uency for a s uare wave with a millisecond period, this fre uency is , so it knew how to classify the harmonics. Note how small the gures are for all the even harmonics nd, 4th, th, 8th , and how the amplitudes of the odd harmonics diminish st is largest, 9th is smallest .

This same techni ue of Fourier Transformation is often used in computeri ed power instru mentation, sampling the AC waveform s and determining the harmonic content thereof. A common computer algorithm se uence of program steps to perform a task for this is the *F s Fo r er Tr ns- or* or *FFT* function. You need not be concerned with exactly how these computer routines work, but be aware of their existence and application.

This same mathematical techni ue used in CE to analy e the harmonic content of waves can be applied to the technical analysis of music breaking up any particular sound into its constituent sine wave fre uencies. n fact, you may have already seen a device designed to do just that without reali ing what it was! A *r c eq l zer* is a piece of high delity stereo e uipment that controls and sometimes displays the nature of music's harmonic content. E uipped with several knobs or slide levers, the e uali er is able to selectively attenuate reduce the amplitude of certain fre uencies present in music, to customi e the sound for the listener's bene t. Typically, there will be a bar graph display next to each control lever, displaying the amplitude of each particular fre uency.

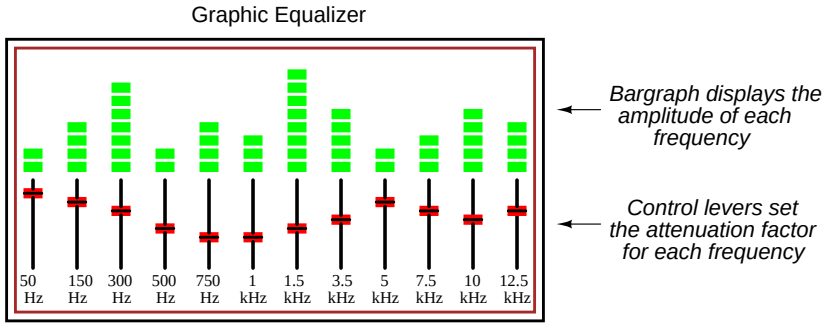

A device built strictly to display not control the amplitudes of each fre uency range for a mixed fre uency signal is typically called a *s ec r n l zer*. The design of spectrum analy ers may be as simple as a set of lter circuits see the next chapter for details designed to separate the different fre uencies from each other, or as complex as a special purpose digital computer running an FFT algorithm to mathematically split the signal into its harmonic components. pectrum analy ers are often designed to analy e extremely high fre uency signals, such as those produced by radio transmitters and computer network hardware. n that form, they often have an appearance like that of an oscilloscope

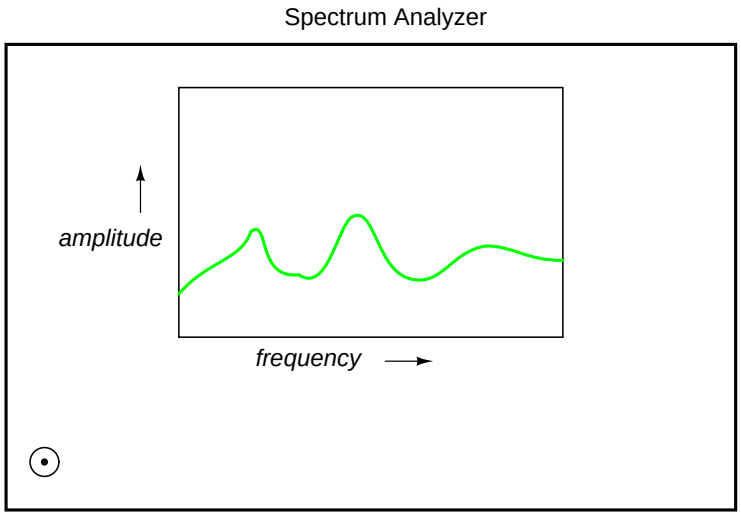

Like an oscilloscope, the spectrum analy er uses a CRT or a computer display mimicking a CRT to display a plot of the signal. Unlike an oscilloscope, this plot is amplitude over *req enc* rather than amplitude over *e*. n essence, a fre uency analy er gives the operator a Bode plot of the signal something an engineer might call a *req enc - o n* rather than a *e- o n* analysis.

The term domain is mathematical a sophisticated word to describe the hori ontal axis of a graph. Thus, an oscilloscope's plot of amplitude vertical over time hori ontal is a time domain analysis, whereas a spectrum analy er's plot of amplitude vertical over fre uency hori ontal is a fre uency domain analysis. When we use CE to plot signal amplitude either voltage or current amplitude over a range of fre uencies, we are performing *req enc - o n* analysis.

lease take note of how the Fourier analysis from the last CE simulation isn't perfect. deally, the amplitudes of all the even harmonics should be absolutely ero, and so should the C component. Again, this is not so much a uirk of CE as it is a property of waveforms in general. A waveform of in nite duration in nite number of cycles can be analy ed with absolute precision, but the less cycles available to the computer for analysis, the less precise the analysis. t is only when we have an e uation describing a waveform in its entirety that Fourier analysis can reduce it to a de nite series of sinusoidal waveforms. The fewer times that a wave cycles, the less certain its fre uency is. Taking this concept to its logical extreme, a short pulse a waveform that doesn't even complete a cycle actually *s no req enc* , but rather acts as an in nite range of fre uencies. This principle is common to *ll* wave based phenomenon, not just AC voltages and currents.

uffice it to say that the number of cycles and the certainty of a waveform's fre uency compo nent s are directly related. We could improve the precision of our analysis here by letting the wave oscillate on and on for many cycles, and the result would be a spectrum analysis more consistent with the ideal. n the following analysis, 've omitted the waveform plot for brevity's sake it's just a really long s uare wave

```
squarewave
v      pulse (-      . m . m   m 2 m)
r        k
.option limpts=
```

```
.tran  m
.plot tran v( , )
.four 5  v( , )
.end

fourier components of transient response v( )
dc component =   9.999 - 3
harmonic  frequency    fourier    normali ed   phase   normali ed
no           (h )     component   component    (deg)   phase (deg)
          5.    +      .273 +        .          - .8          .
2          .    + 2    .999 - 2      .  57 4    86.382      88. 82
3          .5   + 2   4.238 -       .332897    -5.4        -3.6
4         2.    + 2    .997 - 2      .  5688    82.764      84.564
5         2.5   + 2   2.536 -       . 992 5    -9.         -7.2
6         3.    + 2    .994 - 2      .  5663    79. 46      8 .946
7         3.5   + 2    .8 4 -       . 4 737   - 2.6       -  .8
8         4.    + 2    .989 - 2      .  5627    75.529      77.329
9         4.5   + 2    .396 -        .  9662   - 6. 99     - 4.399
```

Notice how this analysis shows less of a C component voltage and lower amplitudes for each of the even harmonic fre uency sine waves, all because we let the computer sample more cycles of the wave. Again, the imprecision of the rst analysis is not so much a flaw in CE as it is a fundamental property of waves and of signal analysis.

- **REVIEW:**
- uare waves are e uivalent to a sine wave at the same fundamental fre uency added to an in nite series of odd multiple sine wave harmonics at decreasing amplitudes.
- Computer algorithms exist which are able to sample waveshapes and determine their con stituent sinusoidal components. The *Fo r er Tr ns or* algorithm particularly the *F s Fo r er Tr ns or* , or *FFT* is commonly used in computer circuit simulation programs such as CE and in electronic metering e uipment for determining power uality.

3 O he aveshapes

As strange as it may seem, *n* repeating, non sinusoidal waveform is actually e uivalent to a series of sinusoidal waveforms of different amplitudes and fre uencies added together. uare waves are a very common and well understood case, but not the only one.

Electronic power control devices such as transistors and silicon controlled recti ers *SCRs* often produce voltage and current waveforms that are essentially chopped up versions of the otherwise clean pure sine wave AC from the power supply. These devices have the ability to suddenly *c n e* their resistance with the application of a control signal voltage or current, thus turning on or turning off almost instantaneously, producing current waveforms bearing little resemblance to the source voltage waveform powering the circuit. These current waveforms then produce changes in

the voltage waveform to other circuit components, due to voltage drops created by the non sinusoidal current through circuit impedances.

Circuit components that distort the normal sine wave shape of AC voltage or current are called *nonl ne r*. Nonlinear components such as CRs nd popular use in power electronics due to their ability to regulate large amounts of electrical power without dissipating much heat. While this is an advantage from the perspective of energy efficiency, the waveshape distortions they introduce can cause problems.

These non sinusoidal waveforms, regardless of their actual shape, are e uivalent to a series of sinusoidal waveforms of higher harmonic fre uencies. f not taken into consideration by the circuit designer, these harmonic waveforms created by electronic switching components may cause erratic circuit behavior. t is becoming increasingly common in the electric power industry to observe overheating of transformers and motors due to distortions in the sine wave shape of the AC power line voltage stemming from switching loads such as computers and high efficiency lights. This is no theoretical exercise it is very real and potentially very troublesome.

n this section, will investigate a few of the more common waveshapes and show their harmonic components by way of Fourier analysis using CE.

One very common way harmonics are generated in an AC power system is when AC is converted, or recti ed into C. This is generally done with components called *o es*, which only allow passage current in one direction. The simplest type of AC C recti cation is *l -w e*, where a single diode blocks half of the AC current over time from passing through the load. Oddly enough, the conventional diode schematic symbol is drawn such that electrons flow *ns* the direction of the symbol's arrowhead

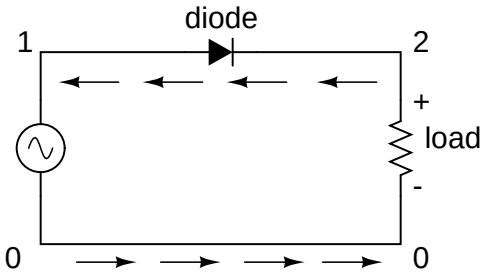

The diode only allows electron flow in a counter-clockwise direction.

```
halfwave rectifier
v      sin(   5 6     )
rload 2     k
d    2 mod
.model mod  d
.tran .5m  7m
.plot tran v( , ) v(2, )
.four 6  v( , ) v(2, )
.end
```

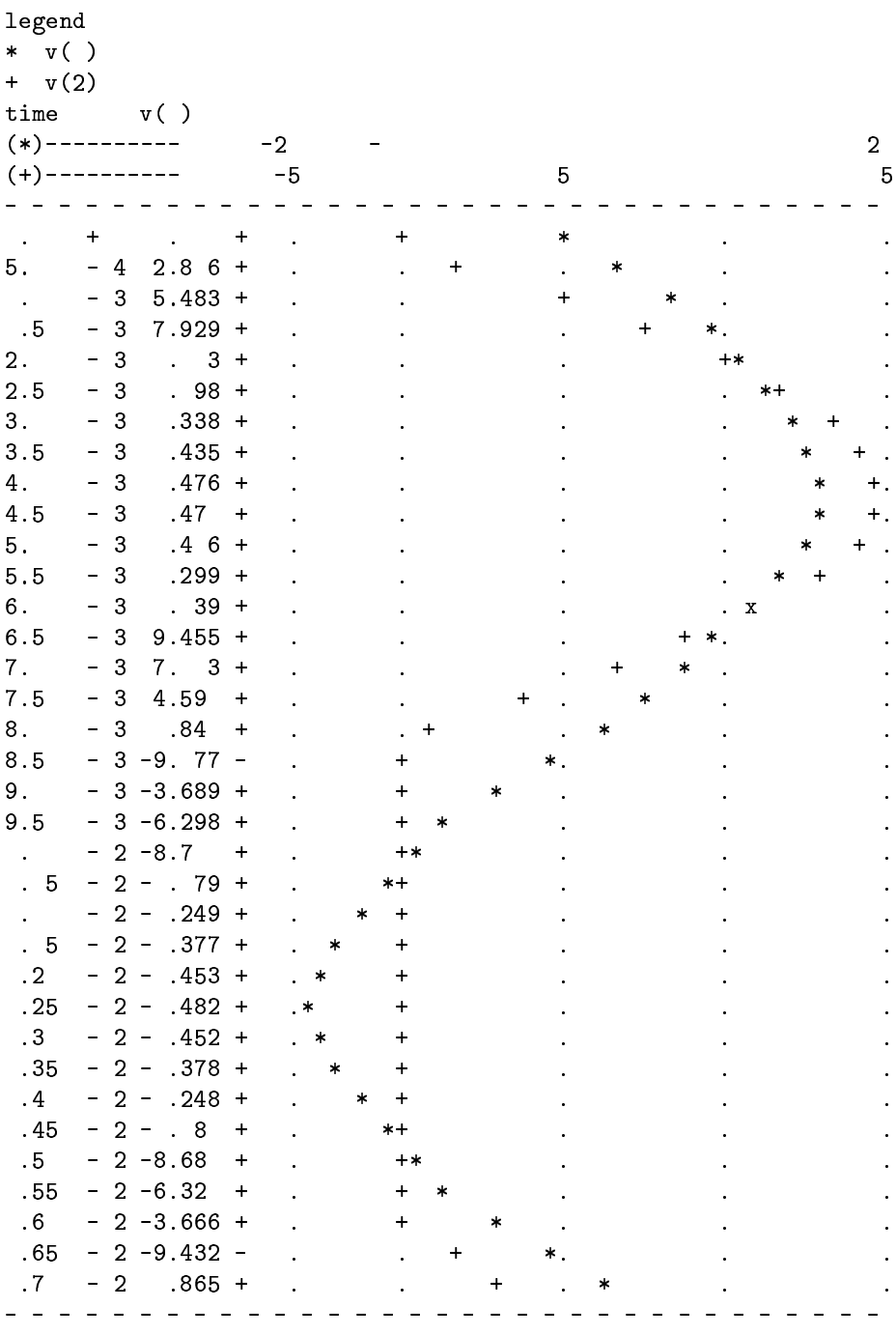

First, we'll see how CE analy es the source waveform, a pure sine wave voltage

```
fourier components of transient response v( )
dc component =   8.  6 - 4
harmonic   frequency  fourier    normali ed   phase   normali ed
no          (h )      component   component    (deg)   phase (deg)
         6.    +      .482 +         .          - .  5        .
2         .2   + 2   2.492 - 3       .    68  -  4.347    -  4.342
3         .8   + 2   6.465 - 4       .    44   -86.663     -86.658
4        2.4   + 2    . 32 - 3      .    76   -6 .324     -6 .3 9
5        3.    + 2    . 85 - 3      .    8    -7 . 9      -7 . 86
6        3.6   + 2    . 92 - 3      .    74   -63.6 7     -63.6 2
7        4.2   + 2    .22  - 3      .    82   -56.288     -56.283
8        4.8   + 2    .354 - 3      .    9    -54.669     -54.664
9        5.4   + 2    .467 - 3      .    99   -52.66      -52.655
```

Notice the extremely small harmonic and C components of this sinusoidal waveform. deally, there would be nothing but the fundamental fre uency showing being a perfect sine wave , but our Fourier analysis gures aren't perfect because CE doesn't have the luxury of sampling a waveform of in nite duration. Next, we'll compare this with the Fourier analysis of the half wave recti ed voltage across the load resistor

```
fourier components of transient response v(2)
dc component =   4.456 +
harmonic  frequency   fourier    normali ed   phase    normali ed
no          (h )      component   component    (deg)    phase (deg)
         6.    +     7.    +        .          - . 95        .
2         .2   + 2   3.  6 +       .43 849   -89.765     -89.57
3         .8   + 2    .2 6 -       .  7223  - 68.  5    - 67.8
4        2.4   + 2   5. 49 -       . 73556   -87.295     -87.
5        3.    + 2   6.382 - 2     .  9  7  - 52.79     - 52.595
6        3.6   + 2    .727 -       . 24676   -79.362     -79. 67
7        4.2   + 2   4.492 - 2     .  64 7  - 32.42     - 32.224
8        4.8   + 2   7.493 - 2     .   7 3   -6 .479     -6 .284
9        5.4   + 2   4. 5  - 2     .  5787  -  5. 85    -  4.889
```

Notice the relatively large even multiple harmonics in this analysis. By cutting out half of our AC wave, we've introduced the e uivalent of several higher fre uency sinusoidal actually, cosine waveforms into our circuit from the original, pure sine wave. Also take note of the large C com ponent 4.4 volts. Because our AC voltage waveform has been recti ed only allowed to push in one direction across the load rather than back and forth , it behaves a lot more like C.

Another method of AC C conversion is called *ll-w e*, which as you may have guessed utili es the full cycle of AC power from the source, reversing the polarity of half the AC cycle to get electrons to flow through the load the same direction all the time. won't bore you with details of exactly how this is done, but we can examine the waveform and its harmonic analysis through CE

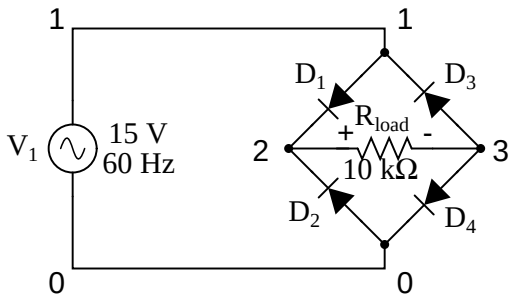


```
fullwave bridge rectifier
v      sin(   5 6     )
rload 2 3   k
d    2 mod
d2   2 mod
d3 3   mod
d4 3   mod
.model mod  d
.tran .5m  7m
.plot tran v( , ) v(2,3)
.four 6  v(2,3)
.end

legend
*  v( )
+  v(2,3)
time       v( )
(*)----------      -2          -         .    +         .    +
(+)----------   .    +       5.    +         .    +        .5   +
- - - - - - - - - - - - - - - - - - - - - - - - - - - - - - - - - -
 .    +     .    +   +          .             *            .       .
5.    - 4  2.8 6 +   .   +      .             .   *        .       .
 .    - 3  5.483 +   .         +.             .      *     .       .
 .5   - 3  7.929 +   .          .    +        .          *  .       .
2.    - 3   .  3 +   .          .          +  .             *       .
2.5   - 3   . 98 +   .          .             . +           . *     .
3.    - 3   .338 +   .          .             .     +       .   *   .
3.5   - 3   .435 +   .          .             .       +     .     *.
4.    - 3   .476 +   .          .             .         +   .       *
4.5   - 3   .47  +   .          .             .         +   .     *.
5.    - 3   .4 6 +   .          .             .       +     .    * .
5.5   - 3   .299 +   .          .             .    +        .  *    .
6.    - 3   . 39 +   .          .             +             .*      .
6.5   - 3  9.455 +   .          .       +     .            *.       .
7.    - 3  7.  3 +   .          . +           .         *   .       .
```

```
7.5   - 3  4.59  +   .      +   .             .     *      .      .
8.    - 3   .84  +   .   +      .             .  *          .      .
8.5   - 3 -9. 77 -   . +        .           *.             .      .
9.    - 3 -3.689 +   .    +     .       *     .             .      .
9.5   - 3 -6.298 +   .          +    *       .             .      .
 .    - 2 -8.7   +   .          . *    +     .             .      .
 . 5  - 2 - . 79 +   .         *.           +.             .      .
 .    - 2 - .249 +   .       *  .             .  +          .      .
 . 5  - 2 - .377 +   .     *    .             .      +      .      .
 .2   - 2 - .453 +   .    *     .             .        +    .      .
 .25  - 2 - .482 +   .   *      .             .         +   .      .
 .3   - 2 - .452 +   .    *     .             .        +    .      .
 .35  - 2 - .378 +   .     *    .             .      +      .      .
 .4   - 2 - .248 +   .       *  .             .  +          .      .
 .45  - 2 - . 8  +   .         *.           +.             .      .
 .5   - 2 -8.68  +   .          . *    +     .             .      .
 .55  - 2 -6.32  +   .          +    *       .             .      .
 .6   - 2 -3.666 +   .     +    .       *     .             .      .
 .65  - 2 -9.432 -   .   +      .           *.             .      .
 .7   - 2   .865 +   .    +     .             .  *          .      .
- - - - - - - - - - - - - - - - - - - - - - - - - - - - - - - - - - -
```

```
fourier components of transient response v(2,3)
dc component =   8.273 +
harmonic   frequency  fourier    normali ed   phase   normali ed
no          (h )      component   component    (deg)   phase (deg)
         6.    +     7.    - 2       .         -93.5 9        .
2         .2   + 2   5.997 +      85.6694 5   -9 .23        3.289
3         .8   + 2   7.24  - 2      . 34465   -93.787      - .267
4        2.4   + 2    .  3 +       4.465 6    -92.492       . 27
5        3.    + 2   7.364 - 2      . 52 23   -95. 26      - .5 7
6        3.6   + 2   3.337 -       4.76735   -   .27       -6.752
7        4.2   + 2   7.496 - 2      . 7 827   -94. 23      - .5 4
8        4.8   + 2    .4 4 -       2.  6 43  -  8.839     -25.3 9
9        5.4   + 2   7.457 - 2      . 6524    -9 .9 7       2.6 2
```

What a difference! According to CE's Fourier transform, we have a nd harmonic component to this waveform that's over 8 times the amplitude of the original AC source fre uency! The C component of this wave shows up as being 8. 73 volts almost twice what is was for the half wave recti er circuit while the second harmonic is almost volts in amplitude. Notice all the other harmonics further on down the table. The odd harmonics are actually stronger at some of the higher fre uencies than they are at the lower fre uencies, which is interesting.

As you can see, what may begin as a neat, simple AC sine wave may end up as a complex mess of harmonics after passing through just a few electronic components. While the complex mathematics behind all this Fourier transformation is not necessary for the beginning student of electric circuits to understand, it is of the utmost importance to reali e the principles at work and to grasp the practical

effects that harmonic signals may have on circuits. The practical effects of harmonic fre uencies in circuits will be explored in the last section of this chapter, but before we do that we'll take a closer look at waveforms and their respective harmonics.

- **REVIEW:**
- *An* waveform at all, so long as it is repetitive, can be reduced to a series of sinusoidal waveforms added together. ifferent waveshapes consist of different blends of sine wave harmonics.
- Recti cation of AC to C is a very common source of harmonics within industrial power systems.

4 M e spe m a alysis

Computeri ed Fourier analysis, particularly in the form of the *FFT* algorithm, is a powerful tool for furthering our understanding of waveforms and their related spectral components. This same mathematical routine programmed into the CE simulator as the `.fourier` option is also programmed into a variety of electronic test instruments to perform real time Fourier analysis on measured signals. This section is devoted to the use of such tools and the analysis of several different waveforms.

First we have a simple sine wave at a fre uency of 3. . This particular fre uency value is a C pitch on a piano keyboard, one octave above middle C . Actually, the signal measured for this demonstration was created by an electronic keyboard set to produce the tone of a panflute, the closest instrument voice could nd resembling a perfect sine wave. The plot below was taken from an oscilloscope display, showing signal amplitude voltage over time

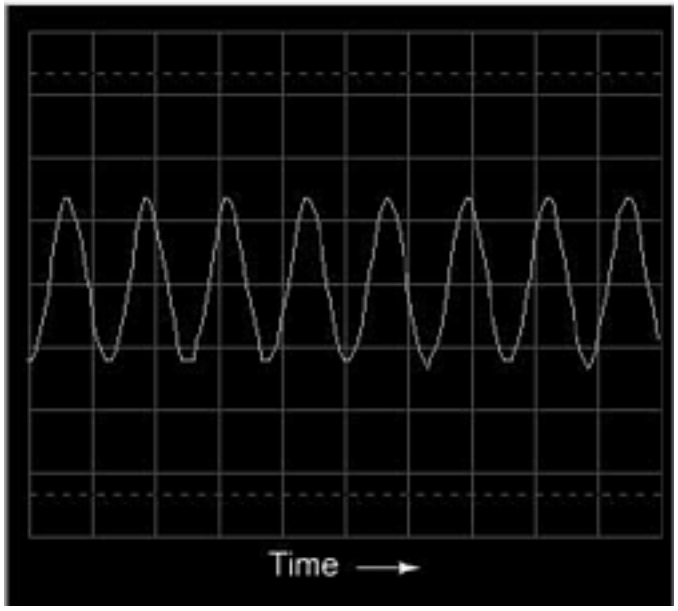

iewed with an oscilloscope, a sine wave looks like a wavy curve traced hori ontally on the screen. The hori ontal axis of this oscilloscope display is marked with the word Time and an

arrow pointing in the direction of time's progression. The curve itself, of course, represents the cyclic increase and decrease of voltage over time.

Close observation reveals imperfections in the sine wave shape. This, unfortunately, is a result of the speci c e uipment used to analy e the waveform. Characteristics like these due to uirks of the test e uipment are technically known as *r c s* phenomena existing solely because of a peculiarity in the e uipment used to perform the experiment.

f we view this same AC voltage on a spectrum analy er, the result is uite different

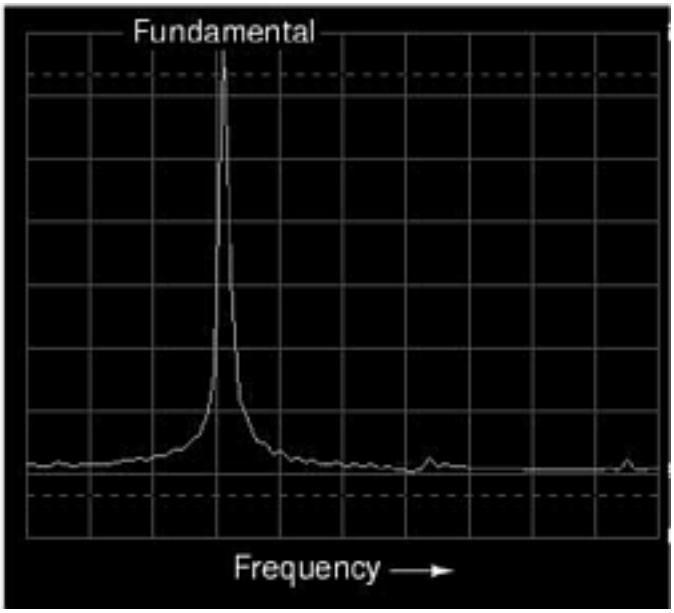

As you can see, the hori ontal axis of the display is marked with the word Fre uency, denoting the domain of this measurement. The single peak on the curve represents the predominance of a single fre uency within the range of fre uencies covered by the width of the display. f the scale of this analy er instrument were marked with numbers, you would see that this peak occurs at 3. . The height of the peak represents the signal amplitude voltage .

f we mix three different sine wave tones together on the electronic keyboard C E G, a C major chord and measure the result, both the oscilloscope display and the spectrum analy er display reflect this increased complexity

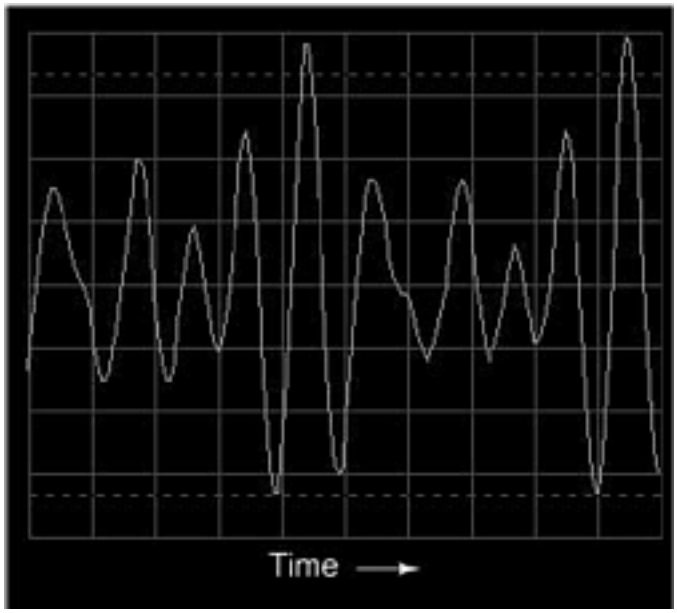

The oscilloscope display time domain shows a waveform with many more peaks and valleys than before, a direct result of the mixing of these three fre uencies. As you will notice, some of these peaks are higher than the peaks of the original single pitch waveform, while others are lower. This is a result of the three different waveforms alternately reinforcing and canceling each other as their respective phase shifts change in time.

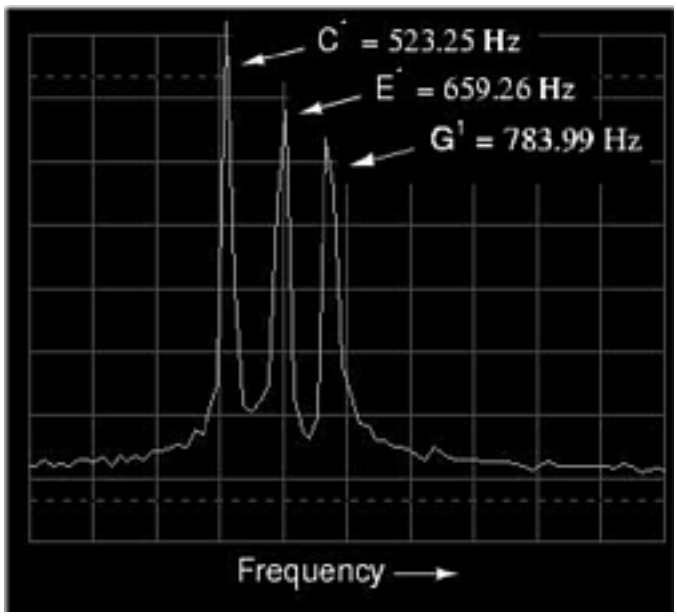

The spectrum display fre uency domain is much easier to interpret each pitch is represented

by its own peak on the curve. The difference in height between these three peaks is another artifact of the test e uipment a conse uence of limitations within the e uipment used to generate and analy e these waveforms, and not a necessary characteristic of the musical chord itself.

As was stated before, the device used to generate these waveforms is an electronic keyboard a musical instrument designed to mimic the tones of many different instruments. The panflute voice was chosen for the rst demonstrations because it most closely resembled a pure sine wave a single fre uency on the spectrum analy er display . Other musical instrument voices are not as simple as this one, though. n fact, the uni ue tone produced by n instrument is a function of its waveshape or spectrum of fre uencies . For example, let's view the signal for a trumpet tone

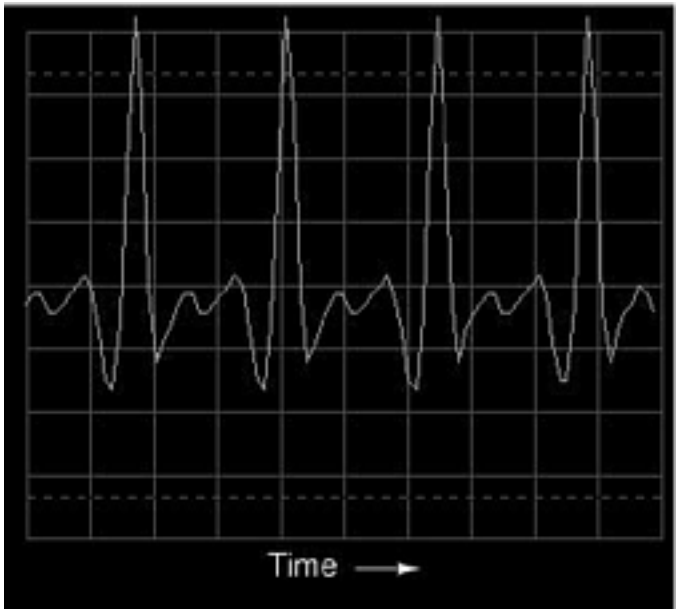

The fundamental fre uency of this tone is the same as in the rst panflute example 3. , one octave above middle C. The waveform itself is far from a pure and simple sine wave form. Knowing that any repeating, non sinusoidal waveform is e uivalent to a series of sinusoidal waveforms at different amplitudes and fre uencies, we should expect to see multiple peaks on the spectrum analy er display

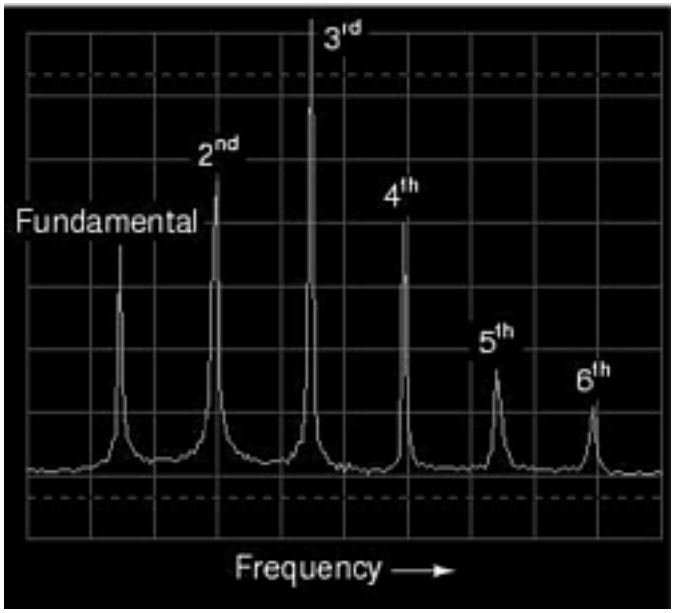

ndeed we do! The fundamental fre uency component of 3. is represented by the left most peak, with each successive harmonic represented as its own peak along the width of the analy er screen. The second harmonic is twice the fre uency of the fundamental 4 . , the third harmonic three times the fundamental 97 , and so on. This display only shows the rst six harmonics, but there are many more comprising this complex tone.

Trying a different instrument voice the accordion on the keyboard, we obtain a similarly com plex oscilloscope time domain plot and spectrum analy er fre uency domain display

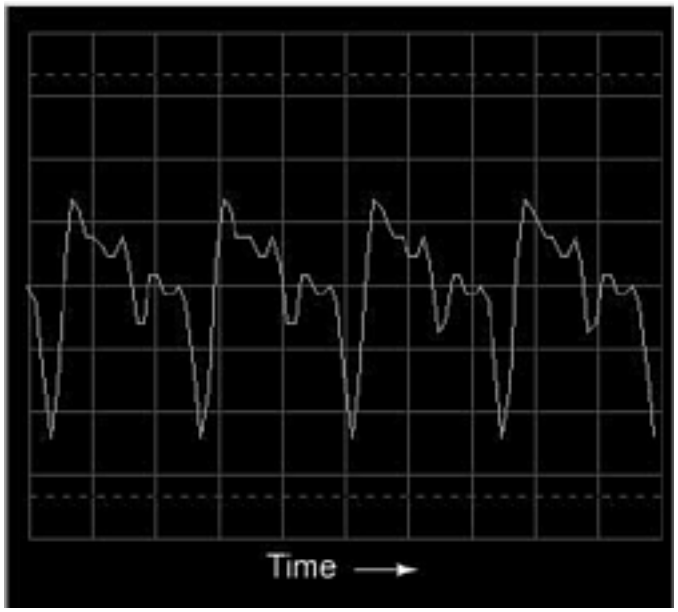

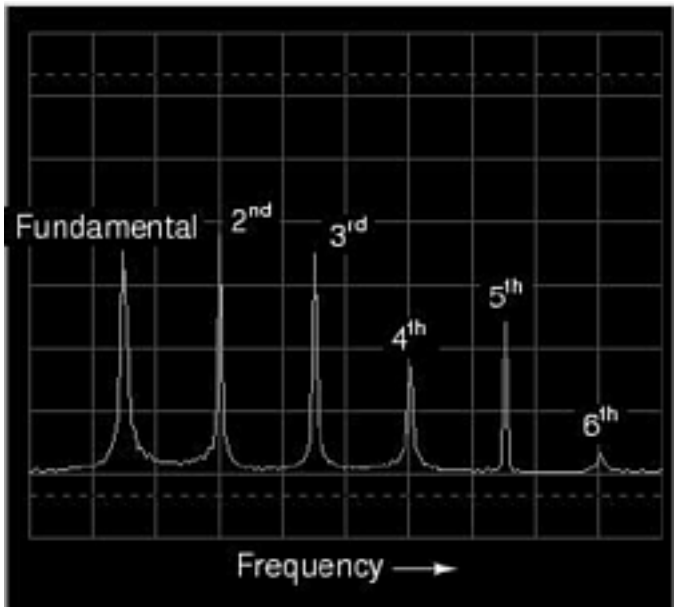

Note the differences in relative harmonic amplitudes peak heights on the spectrum displays for trumpet and accordion. Both instrument tones contain harmonics all the way from st fundamental to th and beyond! , but the proportions aren't the same. Each instrument has a uni ue harmonic signature to its tone. Bear in mind that all this complexity is in reference to *s n le no e* played with these two instrument voices. ultiple notes played on an accordion, for example, would create a much more complex mixture of fre uencies than what is seen here.

The analytical power of the oscilloscope and spectrum analy er permit us to derive general rules about waveforms and their harmonic spectra from real waveform examples. We already know that any deviation from a pure sine wave results in the e uivalent of a mixture of multiple sine wave waveforms at different amplitudes and fre uencies. owever, close observation allows us to be more speci c than this. Note, for example, the time and fre uency domain plots for a waveform approximating a s uare wave

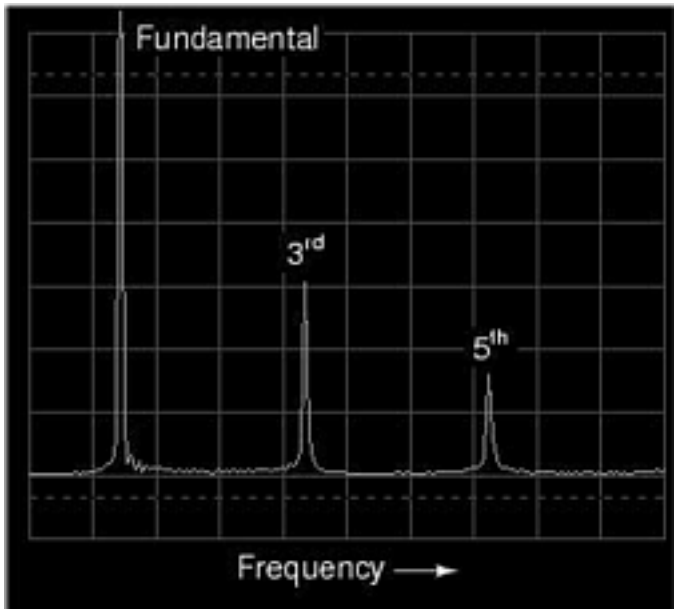

According to the spectrum analysis, this waveform contains *no* even harmonics, only odd. Al though this display doesn't show fre uencies past the sixth harmonic, the pattern of odd only har monics in descending amplitude continues inde nitely. This should come as no surprise, as we've already seen with CE that a s uare wave is comprised of an in nitude of odd harmonics. The trumpet and accordion tones, however, contained *bo* even and odd harmonics. This difference in harmonic content is noteworthy. Let's continue our investigation with an analysis of a triangle wave

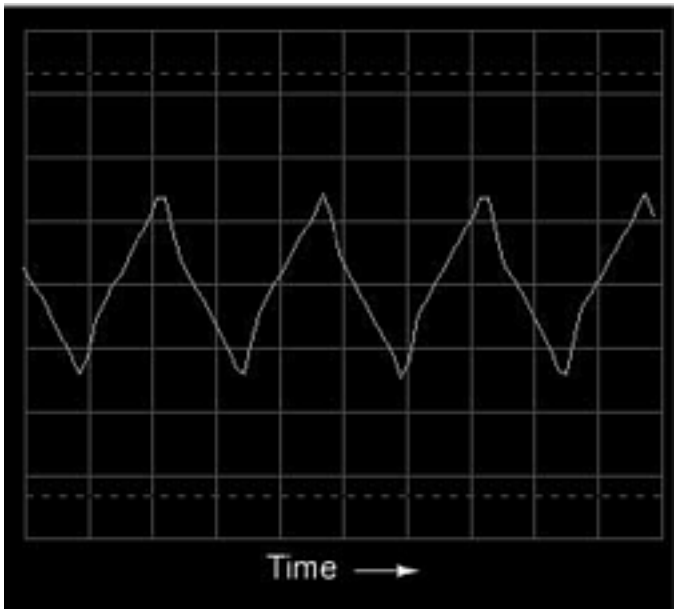

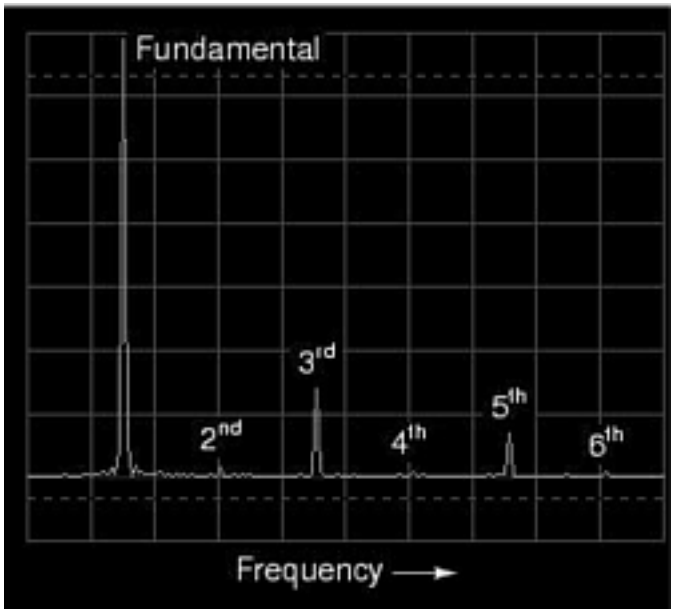

n this waveform there are practically no even harmonics the only signi cant fre uency peaks on the spectrum analy er display belong to odd numbered multiples of the fundamental fre uency. Tiny peaks can be seen for the second, fourth, and sixth harmonics, but this is due to imperfections in this particular triangle waveshape once again, artifacts of the test e uipment used in this analysis . A perfect triangle waveshape produces no even harmonics, just like a perfect s uare wave. t should be obvious from inspection that the harmonic spectrum of the triangle wave is not identical to the

spectrum of the s uare wave the respective harmonic peaks are of different heights. owever, the two different waveforms are common in their lack of even harmonics.

Let's examine another waveform, this one very similar to the triangle wave, except that its rise time is not the same as its fall time. Known as a *s w oo w e*, its oscilloscope plot reveals it to be aptly named

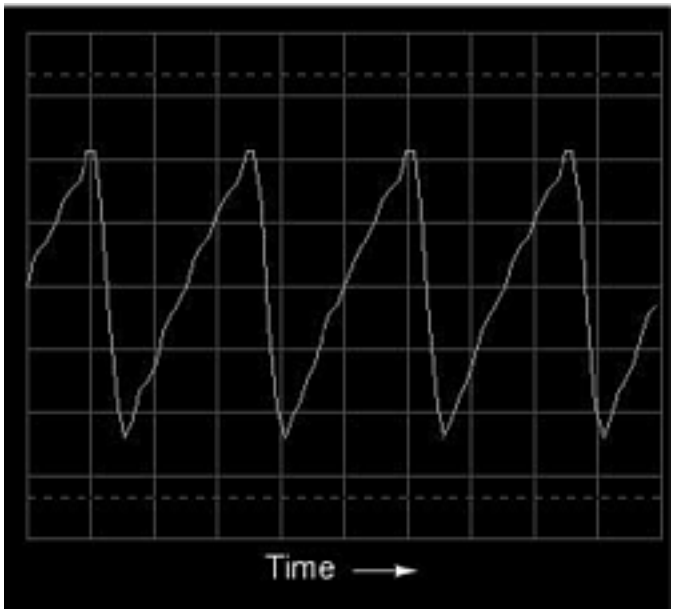

When the spectrum analysis of this waveform is plotted, we see a result that is uite different from that of the regular triangle wave, for this analysis shows the strong presence of even numbered harmonics second and fourth

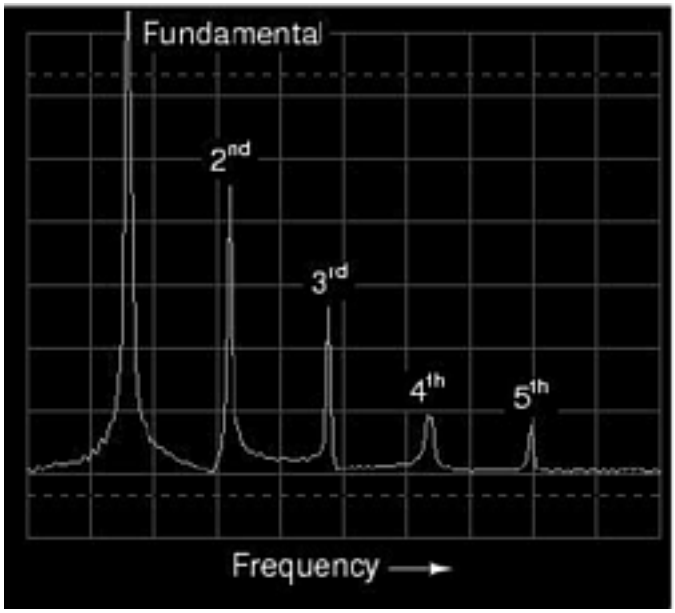

The distinction between a waveform having even harmonics versus no even harmonics resides in the difference between a triangle waveshape and a sawtooth waveshape. That difference is *s e r* above and below the hori ontal centerline of the wave. A waveform that is symmetrical above and below its centerline the shape on both sides mirror each other precisely will contain *no* even numbered harmonics.

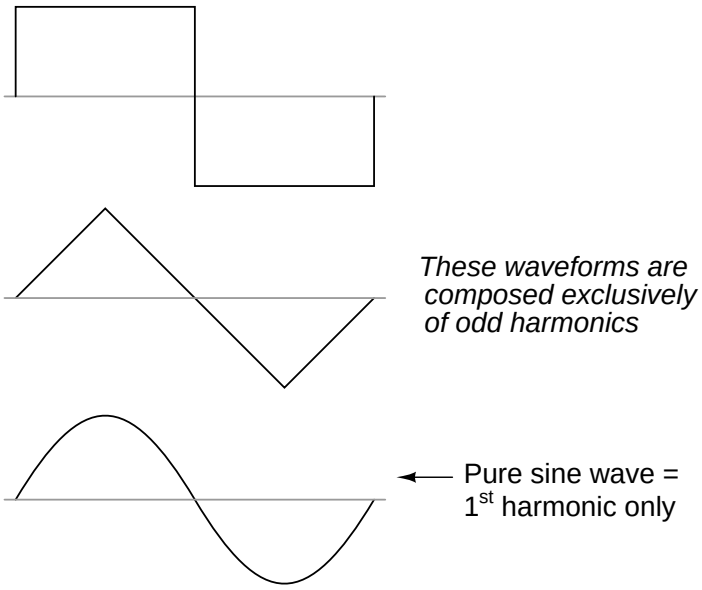

uare waves, triangle waves, and pure sine waves all exhibit this symmetry, and all are devoid of even harmonics. Waveforms like the trumpet tone, the accordion tone, and the sawtooth wave

are unsymmetrical around their centerlines and therefore *o* contain even harmonics.

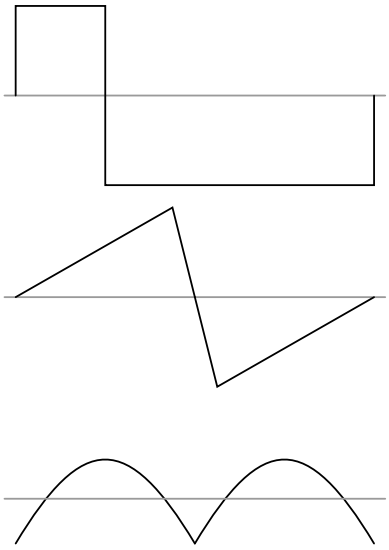

This principle of centerline symmetry should not be confused with symmetry around the *zero* line. n the examples shown, the hori ontal centerline of the waveform happens to be ero volts on the time domain graph, but this has nothing to do with harmonic content. This rule of harmonic content even harmonics only with unsymmetrical waveforms applies whether or not the waveform is shifted above or below ero volts with a C component. For further clari cation, will show the same sets of waveforms, shifted with C voltage, and note that their harmonic contents are unchanged.

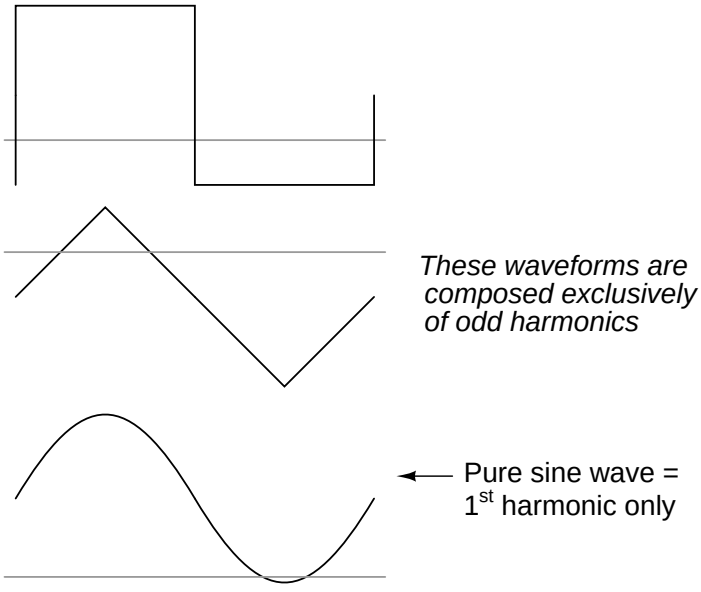

Again, the amount of C voltage present in a waveform has nothing to do with that waveform's harmonic fre uency content.

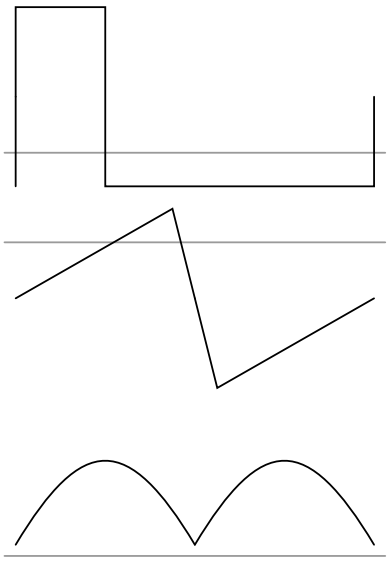

Why is this harmonic rule of thumb an important rule to know? t can help us comprehend the relationship between harmonics in AC circuits and speci c circuit components. ince most sources of sine wave distortion in AC power circuits tend to be symmetrical, even numbered harmonics are rarely seen in those applications. This is good to know if you're a power system designer and are planning ahead for harmonic reduction you only have to concern yourself with mitigating the odd harmonic fre uencies, even harmonics being practically nonexistent. Also, if you happen to measure even harmonics in an AC circuit with a spectrum analy er or fre uency meter, you know that something in that circuit must be *ns e r c ll* distorting the sine wave voltage or current, and that clue may be helpful in locating the source of a problem look for components or conditions more likely to distort one half cycle of the AC waveform more than the other .

Now that we have this rule to guide our interpretation of nonsinusoidal waveforms, it makes more sense that a waveform like that produced by a recti er circuit should contain such strong even harmonics, there being no symmetry at all above and below center.

- **REVIEW:**
- Waveforms that are symmetrical above and below their hori ontal centerlines contain no even numbered harmonics.
- The amount of C bias voltage present a waveform's C component has no impact on that wave's harmonic fre uency content.

5 Ci i effe s

The principle of non sinusoidal, repeating waveforms being e uivalent to a series of sine waves at different fre uencies is a fundamental property of waves in general and it has great practical import

in the study of AC circuits. t means that any time we have a waveform that isn't perfectly sine wave shaped, the circuit in uestion will react as though it's having an array of different fre uency voltages imposed on it at once.

When an AC circuit is subjected to a source voltage consisting of a mixture of fre uencies, the components in that circuit respond to each constituent fre uency in a different way. Any reactive component such as a capacitor or an inductor will simultaneously present a uni ue amount of impedance to each and every fre uency present in a circuit. Thankfully, the analysis of such circuits is made relatively easy by applying the *S er os on T eore* , regarding the multiple fre uency source as a set of single fre uency voltage sources connected in series, and analy ing the circuit for one source at a time, summing the results at the end to determine the aggregate total

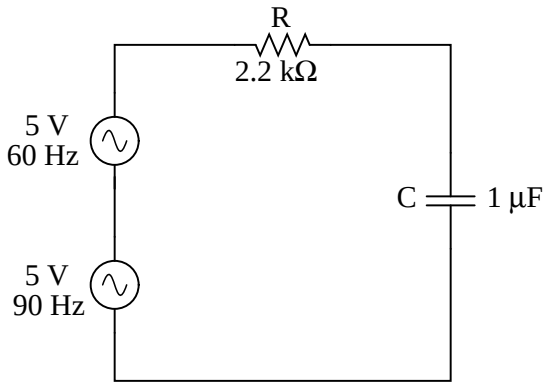

Analy ing circuit for source alone

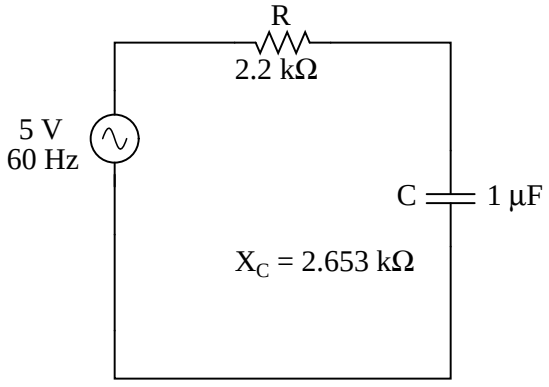

	R	C	Total	
E	2.0377 + j2.4569 3.1919 ∠ 50.328°	2.9623 - j2.4569 3.8486 ∠ -39.6716°	5 + j0 5 ∠ 0°	Volts
I	926.22µ + j1.1168m 1.4509m ∠ 50.328°	926.22µ + j1.1168m 1.4509m ∠ 50.328°	926.22µ + j1.1168m 1.4509m ∠ 50.328°	Amps
Z	2.2k + j0 2.2k ∠ 0°	0 - j2.653k 2.653k ∠ -90°	2.2k - j2.653k 3.446k ∠ -50.328°	Ohms

Analy ing the circuit for 9 source alone

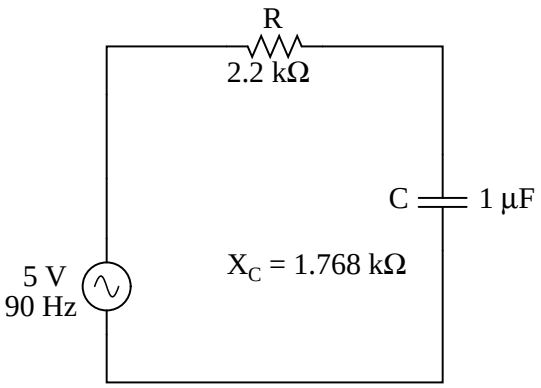

	R	C	Total	
E	3.0375 + j2.4415 3.8971 ∠ 38.793°	1.9625 - j2.4415 3.1325 ∠ -51.207°	5 + j0 5 ∠ 0°	Volts
I	1.3807m + j1.1098m 1.7714m ∠ 38.793°	1.3807m + j1.1098m 1.7714m ∠ 38.793°	1.3807m + j1.1098m 1.7714m ∠ 38.793°	Amps
Z	2.2k + j0 2.2k ∠ 0°	0 - j1.768k 1.768k ∠ -90°	2.2k - j1.768k 2.823k ∠ -38.793°	Ohms

uperimposing the voltage drops across R and C, we get

E_R = [3.1919 V ∠ 50.328° (60 Hz)] + [3.8971 V ∠ 38.793° (90 Hz)]

E_C = [3.8486 V ∠ -39.6716° (60 Hz)] + [3.1325 V ∠ -51.207° (90 Hz)]

Because the two voltages across each component are at different fre uencies, we cannot con solidate them into a single voltage gure as we could if we were adding together two voltages of different amplitude and or phase angle at the same fre uency. Complex number notation give us the ability to represent waveform amplitude polar magnitude and phase angle polar angle , but not fre uency.

What we can tell from this application of the superposition theorem is that there will be a greater voltage dropped across the capacitor than a 9 voltage. Just the opposite is true for the

resistor's voltage drop. This is worthy to note, especially in light of the fact that the two source voltages are e ual. t is this kind of une ual circuit response to signals of differing fre uency that will be our speci c focus in the next chapter.

We can also apply the superposition theorem to the analysis of a circuit powered by a non sinusoidal voltage, such as a s uare wave. f we know the Fourier series multiple sine cosine wave e uivalent of that wave, we can regard it as originating from a series connected string of multiple sinusoidal voltage sources at the appropriate amplitudes, fre uencies, and phase shifts. Needless to say, this can be a laborious task for some waveforms an accurate s uare wave Fourier eries is considered to be expressed out to the ninth harmonic, or ve sine waves in all! , but it is possible. mention this not to scare you, but to inform you of the potential complexity lurking behind seemingly simple waveforms. A real life circuit will respond just the same to being powered by a s uare wave as being powered by an *nfin e* series of sine waves of odd multiple fre uencies and diminishing amplitudes. This has been known to translate into unexpected circuit resonances, transformer and inductor core overheating due to eddy currents, electromagnetic noise over broad ranges of the fre uency spectrum, and the like. Technicians and engineers need to be made aware of the potential effects of non sinusoidal waveforms in reactive circuits.

armonics are known to manifest their effects in the form of electromagnetic radiation as well. tudies have been performed on the potential ha ards of using portable computers aboard passenger aircraft, citing the fact that computers' high fre uency s uare wave clock voltage signals are capable of generating radio waves that could interfere with the operation of the aircraft's electronic navigation e uipment. t's bad enough that typical microprocessor clock signal fre uencies are within the range of aircraft radio fre uency bands, but worse yet is the fact that the harmonic multiples of those fundamental fre uencies span an even larger range, due to the fact that clock signal voltages are s uare wave in shape and not sine wave.

Electromagnetic emissions of this nature can be a problem in industrial applications, too, with harmonics abounding in very large uantities due to nonlinear electronic control of motor and electric furnace power. The fundamental power line fre uency may only be , but those harmonic fre uency multiples theoretically extend into in nitely high fre uency ranges. Low fre uency power line voltage and current doesn't radiate into space very well as electromagnetic energy, but high fre uencies do.

Also, capacitive and inductive coupling caused by close proximity conductors is usually more severe at high fre uencies. ignal wiring nearby power wiring will tend to pick up harmonic interference from the power wiring to a far greater extent than pure sine wave interference. This problem can manifest itself in industry when old motor controls are replaced with new, solid state electronic motor controls providing greater energy efficiency. uddenly there may be weird electrical noise being impressed upon signal wiring that never used to be there, because the old controls never generated harmonics, and those high fre uency harmonic voltages and currents tend to inductively and capacitively couple better to nearby conductors than any signals from the old controls used to.

- **REVIEW:**

- Any regular repeating , non sinusoidal waveform is e uivalent to a particular series of sine cosine waves of different fre uencies, phases, and amplitudes, plus a C offset voltage if necessary. The mathematical process for determining the sinusoidal waveform e uivalent for any wave form is called *Fo r er n l s s.*

- ultiple fre uency voltage sources can be simulated for analysis by connecting several single fre uency voltage sources in series. Analysis of voltages and currents is accomplished by using the superposition theorem. NOTE superimposed voltages and currents of different fre uencies *c nno* be added together in complex number form, since complex numbers only account for amplitude and phase shift, not fre uency!

- armonics can cause problems by impressing unwanted noise voltage signals upon nearby circuits. These unwanted signals may come by way of capacitive coupling, inductive coupling, electromagnetic radiation, or a combination thereof.

H -

Chapter 8

FI TERS

8.1 What is a filter?

It is sometimes desirable to have circuits capable of selectively ltering one fre uency or range of fre uencies out of a mix of different fre uencies in a circuit. A circuit designed to perform this fre uency selection is called a *fil er circui* , or simply a *fil er*. A common need for lter circuits is in high performance stereo systems, where certain ranges of audio fre uencies need to be ampli ed or suppressed for best sound uality and power efficiency. You may be familiar with *equ lizers*, which allow the amplitudes of several fre uency ranges to be adjusted to suit the listener's taste and acoustic properties of the listening area. You may also be familiar with *crossover ne works*, which block certain ranges of fre uencies from reaching speakers. A tweeter (high fre uency speaker) is inefficient at reproducing low fre uency signals such as drum beats, so a crossover circuit is connected between the tweeter and the stereo's output terminals to block low fre uency signals, only passing high fre uency signals to the speaker's connection terminals. This gives better audio system efficiency and thus better performance. Both e uali ers and crossover networks are examples of lters, designed to accomplish ltering of certain fre uencies.

Another practical application of lter circuits is in the "conditioning" of non sinusoidal voltage waveforms in power circuits. Some electronic devices are sensitive to the presence of harmonics in the power supply voltage, and so re uire power conditioning for proper operation. If a distorted sine wave voltage behaves like a series of harmonic waveforms added to the fundamental fre uency, then it should be possible to construct a lter circuit that only allows the fundamental waveform fre uency to pass through, blocking all (higher fre uency) harmonics.

We will be studying the design of several elementary lter circuits in this lesson. To reduce the load of math on the reader, I will make extensive use of SPICE as an analysis tool, displaying Bode plots (amplitude versus fre uency) for the various kinds of lters. Bear in mind, though, that these circuits can be analy ed over several points of fre uency by repeated series parallel analysis, much like the previous example with two sources (6 and 9), if the student is willing to invest a lot of time working and re working circuit calculations for each fre uency.

- **REVIEW:**
- A *fil er* is an AC circuit that separates some fre uencies from others in within mixed fre uency signals.

- Audio *equ lizers* and *crossover ne works* are two well known applications of lter circuits.
- A *Bode plo* is a graph plotting waveform amplitude or phase on one axis and fre uency on the other.

8.2 Low-pass filters

By de nition, a low pass lter is a circuit offering easy passage to low fre uency signals and difficult passage to high fre uency signals. There are two basic kinds of circuits capable of accomplishing this objective, and many variations of each one:

Inductive low-pass filter

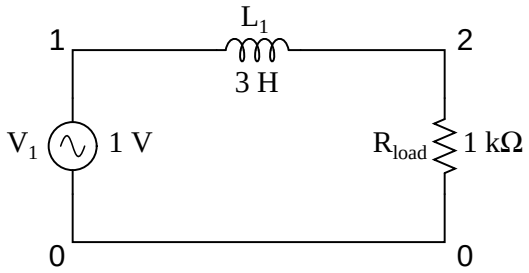

The inductor's impedance increases with increasing fre uency. This high impedance in series tends to block high fre uency signals from getting to the load. This can be demonstrated with a SPICE analysis:

```
inductive lowpass filter
v      ac   sin
l    2 3
rload 2    k
.ac lin 2    2
.plot ac v(2)
.end

freq       v(2)     .25 2       .398          .63
- - - - - - - - - - - - - - - - - - - - - - - - - - - -
 .    +    9.998 -   .            .            .            *
 . 47 +    9.774 -   .            .            .           *.
2. 95 +    9.24  -   .            .            .          * .
3.242 +    8.533 -   .            .            .       *    .
4.289 +    7.776 -   .            .            .     *      .
5.337 +    7. 5  -   .            .            .  *         .
6.384 +    6.39  -   .            .           *             .
7.432 +    5.8   -   .            .         *   .           .
8.479 +    5.3 4 -   .            .        *    .           .
9.526 +    4.865 -   .            .     *      .           .
```

```
 . 57 + 2  4.485 -   .            .   *        .            .
 . 62 + 2  4. 53 -   .            .*           .            .
 .267 + 2  3.863 -   .           *.            .            .
 .372 + 2  3.6 7 -   .         *  .            .            .
 .476 + 2  3.382 -   .        *   .            .            .
 .58  + 2  3. 8  -   .      *     .            .            .
 .686 + 2  3.  2 -   .    *       .            .            .
 .79  + 2  2.84  -   .   *        .            .            .
 .895 + 2  2.696 -   . *          .            .            .
2.    + 2  2.564 -   .*           .            .            .
- - - - - - - - - - - - - - - - - - - - - - - - - - - - - - - -
Load voltage decreases with increasing frequency
```

Capacitive low-pass filter

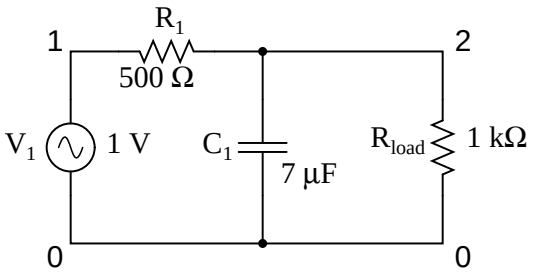

The capacitor's impedance decreases with increasing fre uency. This low impedance in parallel with the load resistance tends to short out high fre uency signals, dropping most of the voltage gets across series resistor R_1.

```
capacitive lowpass filter
v      ac   sin
r    2 5
c  2   7u
rload 2    k
.ac lin 2  3   5
.plot ac v(2)
.end
```

```
freq       v(2)             .3 62      .398       .5  2   .63
- - - - - - - - - - - - - - - - - - - - - - - - - - - - - - -
3.    +    6.  2 -   .        .          .          .        *.
3.632 +    5.885 -   .        .          .          .      *  .
4.263 +    5.653 -   .        .          .          .   *     .
4.895 +    5.4 6 -   .        .          .          .  *      .
5.526 +    5. 8  -   .        .          .         .*         .
6. 58 +    4.948 -   .        .          .        *.          .
6.789 +    4.725 -   .        .          .     *   .          .
```

```
7.42  +    4.5   -   .         .          .    *     .          .
8. 53 +    4.3 9 -   .         .          . *        .          .
8.684 +    4.  8 -   .         .          .*         .          .
9.3 6 +    3.938 -   .         .         *.          .          .
9.947 +    3.77  -   .         .       *   .         .          .
 . 58 + 2  3.6 3 -   .         .     *     .         .          .
 . 2  + 2  3.465 -   .         .  *        .         .          .
 . 84 + 2  3.327 -   .         .*          .         .          .
 .247 + 2  3. 99 -   .         *           .         .          .
 .3   + 2  3. 78 -   .       * .           .         .          .
 .374 + 2  2.965 -   .     *   .           .         .          .
 .437 + 2  2.859 -   .  *      .           .         .          .
 .5   + 2  2.76  -   .*        .           .         .          .
- - - - - - - - - - - - - - - - - - - - - - - - - - - - - - - - -
Load voltage decreases with increasing frequency
```

The inductive low pass lter is the pinnacle of simplicity, with only one component comprising the lter. The capacitive version of this lter is not that much more complex, with only a resistor and capacitor needed for operation. owever, despite their increased complexity, capacitive lter designs are generally preferred over inductive because capacitors tend to be "purer" reactive com ponents than inductors and therefore are more predictable in their behavior. By "pure" I mean that capacitors exhibit little resistive effects than inductors, making them almost % reactive. Induc tors, on the other hand, typically exhibit signi cant dissipative (resistor like) effects, both in the long lengths of wire used to make them, and in the magnetic losses of the core material. Capacitors also tend to participate less in "coupling" effects with other components (generate and/or receive interference from other components via mutual electric or magnetic elds) than inductors, and are less expensive.

owever, the inductive low pass lter is often preferred in AC DC power supplies to lter out the AC "ripple" waveform created when AC is converted (recti ed) into DC, passing only the pure DC component. The primary reason for this is the re uirement of low lter resistance for the output of such a power supply. A capacitive low pass lter re uires an extra resistance in series with the source, whereas the inductive low pass lter does not. In the design of a high current circuit like a DC power supply where additional series resistance is undesirable, the inductive low pass lter is the better design choice. On the other hand, if low weight and compact si e are higher priorities than low internal supply resistance in a power supply design, the capacitive low pass lter might make more sense.

All low pass lters are rated at a certain *cu off requency.* That is, the fre uency above which the output voltage falls below 7 .7% of the input voltage. This cutoff percentage of 7 .7 is not really arbitrary, all though it may seem so at rst glance. In a simple capacitive/resistive low pass lter, it is the fre uency at which capacitive reactance in ohms e uals resistance in ohms. In a simple capacitive low pass lter (one resistor, one capacitor), the cutoff fre uency is given as:

$$f_{cutoff} = \frac{1}{2\pi RC}$$

Inserting the values of R and C from the last SPICE simulation into this formula, we arrive at a cutoff fre uency of 45.473 . owever, when we look at the plot generated by the SPICE

simulation, we see the load voltage well below 7 .7% of the source voltage (volt) even at a fre uency as low as 3 , below the calculated cutoff point. What's wrong? The problem here is that the load resistance of kΩ affects the fre uency response of the lter, skewing it down from what the formula told us it would be. Without that load resistance in place, SPICE produces a Bode plot whose numbers make more sense:

```
capacitive lowpass filter
v      ac   sin
r    2 5
c  2   7u
* note  no load resistor!
.ac lin 2  4  5
.plot ac v(2)
.end

freq       v(2)     .66 7       .69 8        .7244        .7586
- - - - - - - - - - - - - - - - - - - - - - - - - - - - - - - -
4.    +    7.5 8 -   .           .             .          *  .
4. 53 +    7.465 -   .           .             .        *    .
4.  5 +    7.423 -   .           .             .      *      .
4. 58 +    7.38  -   .           .             .     *       .
4.2   +    7.338 -   .           .             .   *         .
4.263 +    7.295 -   .           .             . *           .
4.3 6 +    7.253 -   .           .            *              .
4.368 +    7.2   -   .           .           *.              .
4.42  +    7. 7  -   .           .         *  .              .
4.474 +    7. 29 -   .           .        *    .             .
4.526 +    7. 87 -   .           .      *      .             .
4.579 +    7. 46 -   .           .     *       .             .
4.632 +    7.  6 -   .           .   *         .             .
4.684 +    6.965 -   .           . *           .             .
4.737 +    6.925 -   .           *             .             .
4.789 +    6.885 -   .          *.             .             .
4.842 +    6.846 -   .        *  .             .             .
4.895 +    6.8 6 -   .      *    .             .             .
4.947 +    6.767 -   .    *      .             .             .
5.    +    6.728 -   .   *       .             .             .
- - - - - - - - - - - - - - - - - - - - - - - - - - - - - - - -
 t 45.26   , the output voltage is above 7 .7 percent;
 t 45.79   , the output voltage is below 7 .7 percent;
It should be exactly 7 .7% at 45.473   !
```

When dealing with lter circuits, it is always important to note that the response of the lter depends on the lter's component values *nd* the impedance of the load. If a cutoff fre uency e uation fails to give consideration to load impedance, it assumes no load and will fail to give accurate results for a real life lter conducting power to a load.

- **REVIEW:**
- A low pass lter allows for easy passage of low fre uency signals from source to load, and difficult passage of high fre uency signals.
- Inductive low pass lters insert an inductor in series with the load; capacitive low pass lters insert a resistor in series and a capacitor in parallel with the load. The former lter design tries to "block" the unwanted fre uency signal while the latter tries to short it out.
- The *cu off requency* for a low pass lter is that fre uency at which the output (load) voltage e uals 7 .7% of the input (source) voltage. Above the cutoff fre uency, the output voltage is lower than 7 .7% of the input, and visa versa.

8.3 High-pass filters

A high pass lter's task is just the opposite of a low pass lter: to offer easy passage of a high fre uency signal and difficult passage to a low fre uency signal. As one might expect, the inductive and capacitive versions of the high pass lter are just the opposite of their respective low pass lter designs:

Capacitive high-pass filter

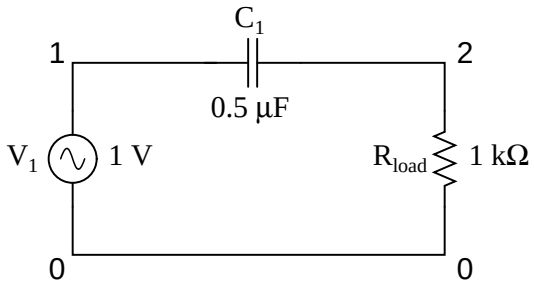

The capacitor's impedance increases with decreasing fre uency. This high impedance in series tends to block low fre uency signals from getting to load.

```
capacitive highpass filter
v      ac   sin
c    2  .5u
rload 2    k
.ac lin 2    2
.plot ac v(2)
.end
```

```
freq       v(2)   .    - 3      .    - 2      .    -     .    +
- - - - - - - - - - - - - - - - - - - - - - - - - - - - - - - - -
 .    +    3. 42 - 3 .      *      .             .             .
 . 47 +    3.6 2 - 2 .             .       *     .             .
```

```
2. 95 +    6.879 - 2 .            .           * .            .
3.242 +      .  3 -   .            .             *            .
4.289 +     .336 -    .            .             . *          .
5.337 +     .654 -    .            .             .  *         .
6.384 +     .966 -    .            .             .   *        .
7.432 +    2.274 -    .            .             .    *       .
8.479 +    2.574 -    .            .             .     *      .
9.526 +    2.867 -    .            .             .     *      .
 . 57 + 2  3. 52 -    .            .             .      *     .
 . 62 + 2  3.429 -    .            .             .      *     .
 .267 + 2  3.698 -    .            .             .       *    .
 .372 + 2  3.957 -    .            .             .       *    .
 .476 + 2  4.2 7 -    .            .             .        *   .
 .58  + 2  4.448 -    .            .             .        *   .
 .686 + 2  4.68  -    .            .             .        *   .
 .79  + 2  4.9 3 -    .            .             .         *  .
 .895 + 2  5.  6 -    .            .             .         *  .
2.    + 2  5.32  -    .            .             .         *  .
- - - - - - - - - - - - - - - - - - - - - - - - - - - - - - - -
Load voltage increases with increasing frequency
```

Inductive high-pass filter

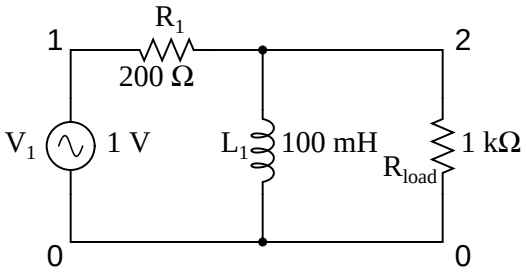

The inductor's impedance decreases with decreasing fre uency. This low impedance in parallel tends to short out low fre uency signals from getting to the load resistor. As a conse uence, most of the voltage gets dropped across series resistor R_1.

```
inductive highpass filter
v      ac   sin
r    2 2
l  2      m
rload 2    k
.ac lin 2    2
.plot ac v(2)
.end

freq       v(2)    .    - 3   .    - 2    .    -       .    +
```

```
- - - - - - - - - - - - - - - - - - - - - - - - - - - - - - - -
 .    +    3. 42 - 3 .  *      .             .             .
 . 47 +    3.6   - 2 .         .       *     .             .
2. 95 +    6.87  - 2 .         .           * .             .
3.242 +     .    -   .         .             *             .
4.289 +     .33  -   .         .             . *           .
5.337 +     .644 -   .         .             .  *          .
6.384 +     .95  -   .         .             .   *         .
7.432 +    2.248 -   .         .             .    *        .
8.479 +    2.537 -   .         .             .     *       .
9.526 +    2.8 7 -   .         .             .     *       .
 . 57 + 2  3. 86 -   .         .             .      *      .
 . 62 + 2  3.344 -   .         .             .      *      .
 .267 + 2  3.59  -   .         .             .       *     .
 .372 + 2  3.828 -   .         .             .       *     .
 .476 + 2  4. 53 -   .         .             .        *    .
 .58  + 2  4.267 -   .         .             .        *    .
 .686 + 2  4.47  -   .         .             .        *    .
 .79  + 2  4.662 -   .         .             .        *    .
 .895 + 2  4.845 -   .         .             .         *   .
2.    + 2  5.  7 -   .         .             .         *   .
- - - - - - - - - - - - - - - - - - - - - - - - - - - - - - - -
Load voltage increases with increasing frequency
```

This time, the capacitive design is the simplest, re uiring only one component above and beyond the load. And, again, the reactive purity of capacitors over inductors tends to favor their use in lter design, especially with high pass lters where high fre uencies commonly cause inductors to behave strangely due to the skin effect and electromagnetic core losses.

As with low pass lters, high pass lters have a rated *cu off requency*, above which the output voltage increases above 7 .7% of the input voltage. Just as in the case of the capacitive low pass lter circuit, the capacitive high pass lter's cutoff fre uency can be found with the same formula:

$$f_{cutoff} = \frac{1}{2\pi RC}$$

In the example circuit, there is no resistance other than the load resistor, so that is the value for R in the formula.

Using a stereo system as a practical example, a capacitor connected in series with the tweeter (treble) speaker will serve as a high pass lter, imposing a high impedance to low fre uency bass signals, thereby preventing that power from being wasted on a speaker inefficient for reproducing such sounds. In like fashion, an inductor connected in series with the woofer (bass) speaker will serve as a low pass lter for the low fre uencies that particular speaker is designed to reproduce. In this simple example circuit, the midrange speaker is subjected to the full spectrum of fre uencies from the stereo's output. ore elaborate lter networks are sometimes used, but this should give you the general idea. Also bear in mind that I'm only showing you one channel (either left or right) on this stereo system. A real stereo would have six speakers: 2 woofers, 2 midranges, and 2 tweeters.

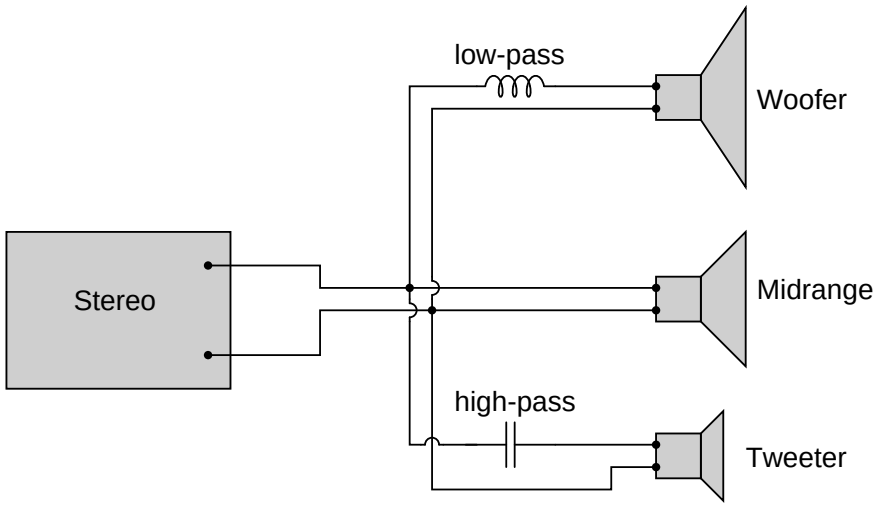

For better performance yet, we might like to have some kind of filter circuit capable of passing frequencies that are between low (bass) and high (treble) to the midrange speaker so that none of the low- or high-frequency signal power is wasted on a speaker incapable of efficiently reproducing those sounds. What we would be looking for is called a *band-pass* filter, which is the topic of the next section.

- **REVIEW:**
- A high-pass filter allows for easy passage of high-frequency signals from source to load, and difficult passage of low-frequency signals.
- Capacitive high-pass filters insert a capacitor in series with the load; inductive high-pass filters insert a resistor in series and an inductor in parallel with the load. The former filter design tries to "block" the unwanted frequency signal while the latter tries to short it out.
- The *cutoff frequency* for a high-pass filter is that frequency at which the output (load) voltage equals 70.7% of the input (source) voltage. Above the cutoff frequency, the output voltage is greater than 70.7% of the input, and visa-versa.

8.4 Band-pass filters

There are applications where a particular band, or spread, or frequencies need to be filtered from a wider range of mixed signals. Filter circuits can be designed to accomplish this task by combining the properties of low-pass and high-pass into a single filter. The result is called a *band-pass* filter. Creating a bandpass filter from a low-pass and high-pass filter can be illustrated using block diagrams:

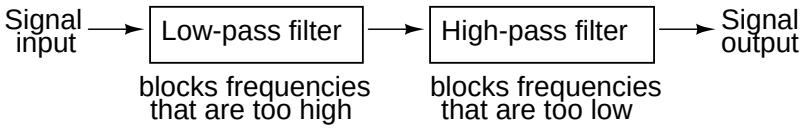

What emerges from the series combination of these two filter circuits is a circuit that will only allow passage of those frequencies that are neither too high nor too low. Using real components, here is what a typical schematic might look like:

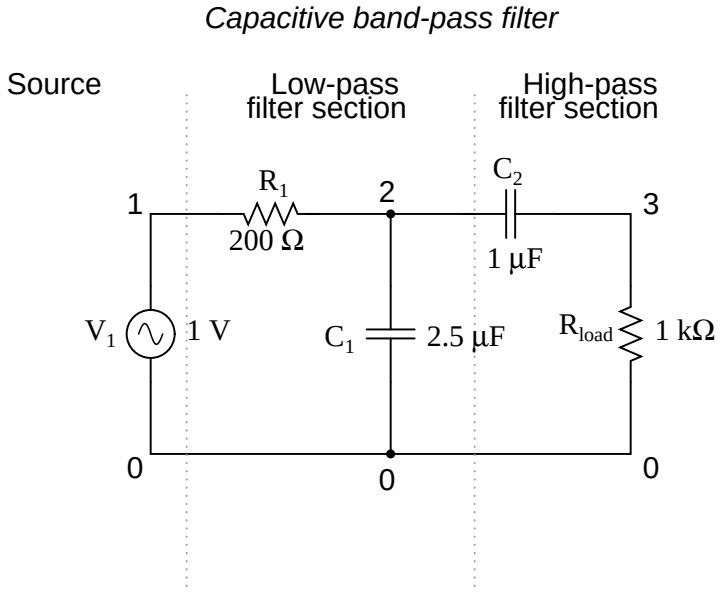


```
capacitive bandpass filter
v1 1 0 ac 1 sin
r1 1 2 200
c1 2 0 2.5u
c2 2 3 1u
rload 3 0 1k
.ac lin 20 100 500
.plot ac v(3)
.end
```

```
freq       v(3)   4.467E-01    5.012E-01    5.623E-01    6.310E-01
- - - - - - - - - - - - - - - - - - - - - - - - - - - - - - - - - -
1.000E+02  4.703E-01 .     *       .            .            .
1.211E+02  5.155E-01 .             .  *         .            .
1.421E+02  5.469E-01 .             .          *  .            .
1.632E+02  5.676E-01 .             .             .*           .
1.842E+02  5.801E-01 .             .             .   *        .
2.053E+02  5.865E-01 .             .             .    *       .
2.263E+02  5.882E-01 .             .             .    *       .
2.474E+02  5.864E-01 .             .             .    *       .
2.684E+02  5.820E-01 .             .             .   *        .
2.895E+02  5.755E-01 .             .             .  *         .
```

```
3.105E+02  5.676E-01 .            .             .*           .
3.316E+02  5.585E-01 .            .            *.            .
3.526E+02  5.487E-01 .            .          *  .            .
3.737E+02  5.384E-01 .            .        *    .            .
3.947E+02  5.277E-01 .            .     *       .            .
4.158E+02  5.169E-01 .            .   *         .            .
4.368E+02  5.060E-01 .            .*            .            .
4.579E+02  4.951E-01 .           *.             .            .
4.789E+02  4.843E-01 .         *   .             .            .
5.000E+02  4.736E-01 .      *      .             .            .
- - - - - - - - - - - - - - - - - - - - - - - - - - - - - - - -
Load voltage peaks within narrow frequency range
```

Band-pass filters can also be constructed using inductors, but as mentioned before, the reactive "purity" of capacitors gives them a design advantage. If we were to design a bandpass filter using inductors, it might look something like this:

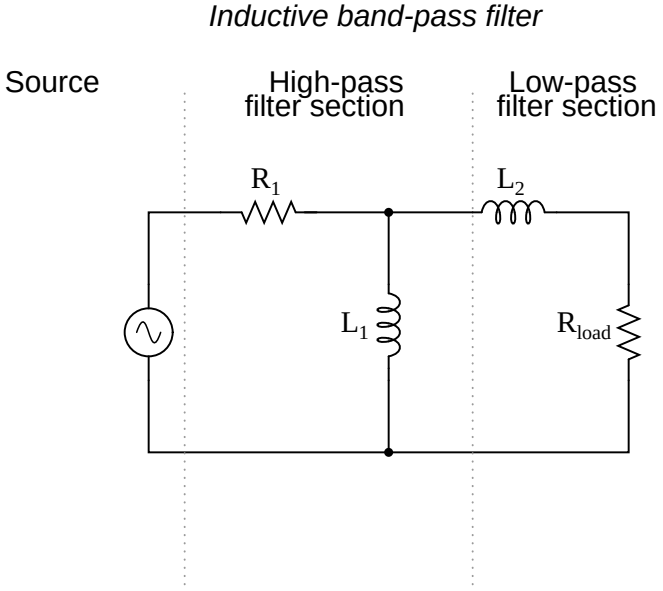

The fact that the high-pass section comes "first" in this design instead of the low-pass section makes no difference in its overall operation. It will still filter out all frequencies too high or too low.

While the general idea of combining low-pass and high-pass filters together to make a bandpass filter is sound, it is not without certain limitations. Because this type of band-pass filter works by relying on either section to *block* unwanted frequencies, it can be difficult to design such a filter to allow unhindered passage within the desired frequency range. Both the low-pass and high-pass sections will always be blocking signals to some extent, and their combined effort makes for an attenuated (reduced amplitude) signal at best, even at the peak of the "pass-band" frequency range. Notice the curve peak on the previous SPICE analysis: the load voltage of this filter never rises above 0.59 volts, although the source voltage is a full volt. This signal attenuation becomes more

pronounced if the filter is designed to be more selective (steeper curve, narrower band of passable frequencies).

There are other methods to achieve band-pass operation without sacrificing signal strength within the pass-band. We will discuss those methods a little later in this chapter.

- **REVIEW:**
- A *band-pass* filter works to screen out frequencies that are too low or too high, giving easy passage only to frequencies within a certain range.
- Band-pass filters can be made by stacking a low-pass filter on the end of a high-pass filter, or visa-versa.
- "Attenuate" means to reduce or diminish in amplitude. When you turn down the volume control on your stereo, you are "attenuating" the signal being sent to the speakers.

8.5 Band-stop filters

Also called *band-elimination*, *band-reject*, or *notch* filters, this kind of filter passes all frequencies above and below a particular range set by the component values. Not surprisingly, it can be made out of a low-pass and a high-pass filter, just like the band-pass design, except that this time we connect the two filter sections in parallel with each other instead of in series.

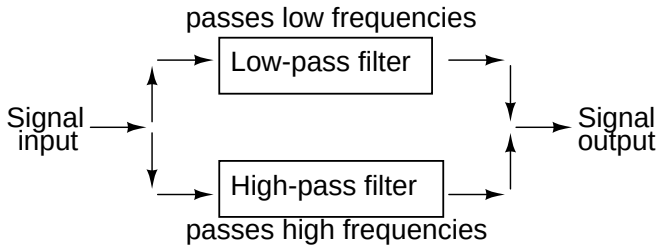

Constructed using two capacitive filter sections, it looks something like this:

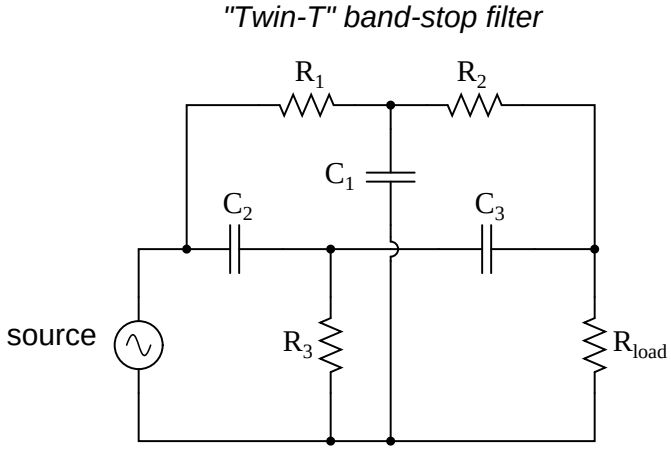

The low-pass filter section is comprised of R_1, R_2, and C_1 in a "T" configuration. The high-pass filter section is comprised of C_2, C_3, and R_3 in a "T' configuration as well. Together, this arrangement is commonly known as a "Twin-T" filter, giving sharp response when the component values are chosen in the following ratios:

Component value ratios for the "Twin-T" band-stop filter

$$R_1 = R_2 = 2(R_3)$$

$$C_2 = C_3 = (0.5)C_1$$

Given these component ratios, the frequency of maximum rejection (the "notch frequency") can be calculated as follows:

$$f_{notch} = \frac{1}{4\pi R_3 C_3}$$

The impressive band-stopping ability of this filter is illustrated by the following SPICE analysis:

```
twin-t bandstop filter
v1 1 0 ac 1 sin
r1 1 2 200
c1 2 0 2u
r2 2 3 200
c2 1 4 1u
r3 4 0 100
c3 4 3 1u
rload 3 0 1k
.ac lin 20 200 1.5k
.plot ac v(3)
.end
```

```
freq       v(3)  1.000E-02  3.162E-02  1.000E-01    3.162E-01
- - - - - - - - - - - - - - - - - - - - - - - - - - - - - - - -
2.000E+02  5.400E-01 .          .           .              .      *.
2.684E+02  4.512E-01 .          .           .              .   *   .
3.368E+02  3.686E-01 .          .           .              . *     .
4.053E+02  2.946E-01 .          .           .             *.       .
4.737E+02  2.290E-01 .          .           .         *   .       .
5.421E+02  1.707E-01 .          .           .      *      .       .
6.105E+02  1.185E-01 .          .           . *            .       .
6.789E+02  7.134E-02 .          .       *   .              .       .
7.474E+02  2.832E-02 .        *.            .              .       .
8.158E+02  1.126E-02 .*         .           .              .       .
8.842E+02  4.796E-02 .          .    *      .              .       .
9.526E+02  8.222E-02 .          .         * .              .       .
```

```
1.021E+03  1.144E-01 .         .           . *           .       .
1.089E+03  1.447E-01 .         .           .   *         .       .
1.158E+03  1.734E-01 .         .           .     *       .       .
1.226E+03  2.007E-01 .         .           .       *     .       .
1.295E+03  2.267E-01 .         .           .         *   .       .
1.363E+03  2.515E-01 .         .           .           * .       .
1.432E+03  2.752E-01 .         .           .             *.      .
- - - - - - - - - - - - - - - - - - - - - - - - - - - - - - - - - -
```

- **REVIEW:**
- A *band-stop* filter works to screen out frequencies that are within a certain range, giving easy passage only to frequencies outside of that range. Also known as *band-elimination*, *band-reject*, or *notch* filters.
- Band-stop filters can be made by placing a low-pass filter in parallel with a high-pass filter. Commonly, both the low-pass and high-pass filter sections are of the "T" configuration, giving the name "Twin-T" to the band-stop combination.
- The frequency of maximum attenuation is called the *notch* frequency.

8.6 Resonant filters

So far, the filter designs we've concentrated on have employed *either* capacitors *or* inductors, but never both at the same time. We should know by now that combinations of L and C will tend to resonate, and this property can be exploited in designing band-pass and band-stop filter circuits.

Series LC circuits give minimum impedance at resonance, while parallel LC ("tank") circuits give maximum impedance at their resonant frequency. Knowing this, we have two basic strategies for designing either band-pass or band-stop filters.

For band-pass filters, the two basic resonant strategies are this: series LC to pass a signal, or parallel LC to short a signal. The two schemes will be contrasted and simulated here:

Series resonant band-pass filter

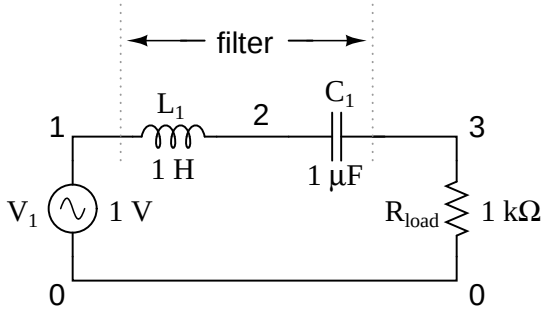

Series LC components pass signal at resonance, and block signals of any other frequencies from getting to the load.

```
series resonant bandpass filter
v1 1 0 ac 1 sin
l1 1 2 1
c1 2 3 1u
rload 3 0 1k
.ac lin 20 50 250
.plot ac v(3)
.end
```

```
freq       v(3)   2.512E-01   3.981E-01    6.310E-01    1.000E+00
- - - - - - - - - - - - - - - - - - - - - - - - - - - - - - - - - -
5.000E+01  3.291E-01 .     *     .              .              .
6.053E+01  4.063E-01 .           .*             .              .
7.105E+01  4.870E-01 .           .     *        .              .
8.158E+01  5.708E-01 .           .           *  .              .
9.211E+01  6.564E-01 .           .              .*             .
1.026E+02  7.411E-01 .           .              .    *         .
1.132E+02  8.210E-01 .           .              .       *      .
1.237E+02  8.910E-01 .           .              .         *    .
1.342E+02  9.460E-01 .           .              .           *  .
1.447E+02  9.824E-01 .           .              .            *.
1.553E+02  9.988E-01 .           .              .             *
1.658E+02  9.967E-01 .           .              .             *
1.763E+02  9.796E-01 .           .              .            *.
1.868E+02  9.518E-01 .           .              .           *  .
1.974E+02  9.174E-01 .           .              .          *   .
2.079E+02  8.797E-01 .           .              .         *    .
2.184E+02  8.408E-01 .           .              .        *     .
2.289E+02  8.026E-01 .           .              .      *       .
2.395E+02  7.657E-01 .           .              .     *        .
2.500E+02  7.307E-01 .           .              .   *          .
- - - - - - - - - - - - - - - - - - - - - - - - - - - - - - - - - -
Load voltage peaks at resonant frequency (159.15 Hz)
```

A couple of points to note: see how there is virtually no signal attenuation within the "pass band" (the range of frequencies near the load voltage peak), unlike the band-pass filters made from capacitors or inductors alone. Also, since this filter works on the principle of series LC resonance, the resonant frequency of which is unaffected by circuit resistance, the value of the load resistor will not skew the peak frequency. However, different values for the load resistor *will* change the "steepness" of the Bode plot (the "selectivity" of the filter).

The other basic style of resonant band-pass filters employs a tank circuit (parallel LC combination) to short out signals too high or too low in frequency from getting to the load:

Parallel resonant band-pass filter

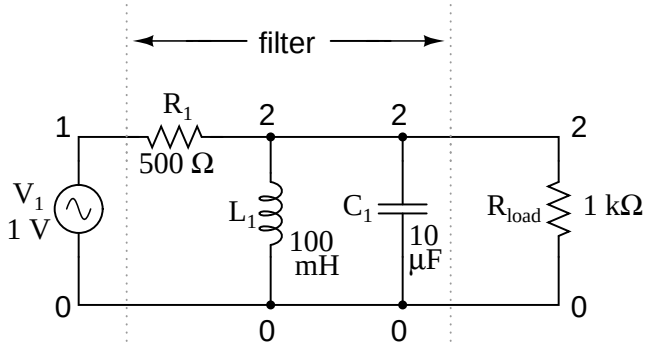

The tank circuit will have a lot of impedance at resonance, allowing the signal to get to the load with minimal attenuation. Under or over resonant frequency, however, the tank circuit will have a low impedance, shorting out the signal and dropping most of it across series resistor R_1.

```
parallel resonant bandpass filter
v1 1 0 ac 1 sin
r1 1 2 500
l1 2 0 100m
c1 2 0 10u
rload 2 0 1k
.ac lin 20 50 250
.plot ac v(2)
.end

freq       v(2)   3.162E-02   1.000E-01    3.162E-01     1.000E+00
- - - - - - - - - - - - - - - - - - - - - - - - - - - - - - - - - -
5.000E+01  6.933E-02 .       *   .             .             .
6.053E+01  8.814E-02 .         * .             .             .
7.105E+01  1.100E-01 .           .*            .             .
8.158E+01  1.361E-01 .           .   *         .             .
9.211E+01  1.684E-01 .           .     *       .             .
1.026E+02  2.096E-01 .           .        *    .             .
1.132E+02  2.640E-01 .           .           * .             .
1.237E+02  3.382E-01 .           .             .*            .
1.342E+02  4.392E-01 .           .             .   *         .
1.447E+02  5.630E-01 .           .             .      *      .
1.553E+02  6.578E-01 .           .             .        *    .
1.658E+02  6.432E-01 .           .             .        *    .
1.763E+02  5.503E-01 .           .             .      *      .
1.868E+02  4.543E-01 .           .             .   *         .
1.974E+02  3.792E-01 .           .             . *           .
2.079E+02  3.234E-01 .           .              *            .
2.184E+02  2.816E-01 .           .            *.             .
```

```
2.289E+02  2.495E-01 .           .          *  .             .
2.395E+02  2.242E-01 .           .         *   .             .
2.500E+02  2.038E-01 .           .        *    .             .
- - - - - - - - - - - - - - - - - - - - - - - - - - - - - - - -
Load voltage peaks at resonant frequency (159.15 Hz)
```

Just like the low-pass and high-pass filter designs relying on a series resistance and a parallel "shorting" component to attenuate unwanted frequencies, this resonant circuit can never provide full input (source) voltage to the load. That series resistance will always be dropping some amount of voltage so long as there is a load resistance connected to the output of the filter.

It should be noted that this form of band-pass filter circuit is very popular in analog radio tuning circuitry, for selecting a particular radio frequency from the multitudes of frequencies available from the antenna. In most analog radio tuner circuits, the rotating dial for station selection moves a variable capacitor in a tank circuit.

The variable capacitor and air-core inductor shown in the above photograph of a simple radio comprise the main elements in the tank circuit filter used to discriminate one radio station's signal from another.

Just as we can use series and parallel LC resonant circuits to pass only those frequencies within a certain range, we can also use them to block frequencies within a certain range, creating a band-stop filter. Again, we have two major strategies to follow in doing this, to use either series or parallel resonance. First, we'll look at the series variety:

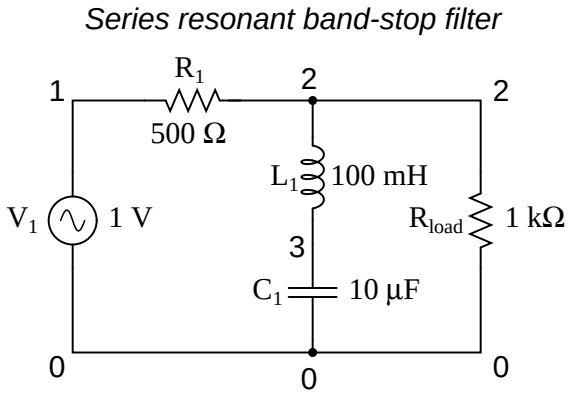

When the series LC combination reaches resonance, its very low impedance shorts out the signal, dropping it across resistor R_1 and preventing its passage on to the load.

```
series resonant bandstop filter
v1 1 0 ac 1 sin
r1 1 2 500
l1 2 3 100m
c1 3 0 10u
rload 2 0 1k
.ac lin 20 70 230
.plot ac v(2)
.end
```

```
freq       v(2)   1.000E-03  1.000E-02   1.000E-01     1.000E+00
- - - - - - - - - - - - - - - - - - - - - - - - - - - - - - - - -
7.000E+01  3.213E-01 .         .              .      *      .
7.842E+01  2.791E-01 .         .              .     *       .
8.684E+01  2.401E-01 .         .              .    *        .
9.526E+01  2.041E-01 .         .              .   *         .
1.037E+02  1.708E-01 .         .              .  *          .
1.121E+02  1.399E-01 .         .              . *           .
1.205E+02  1.111E-01 .         .              .*            .
1.289E+02  8.413E-02 .         .             *.             .
1.374E+02  5.887E-02 .         .           *  .             .
1.458E+02  3.508E-02 .         .       *      .             .
1.542E+02  1.262E-02 .         .*             .             .
1.626E+02  8.644E-03 .        *.              .             .
1.711E+02  2.884E-02 .         .     *        .             .
1.795E+02  4.805E-02 .         .          *   .             .
1.879E+02  6.638E-02 .         .            * .             .
1.963E+02  8.388E-02 .         .             *.             .
2.047E+02  1.006E-01 .         .              *             .
2.132E+02  1.167E-01 .         .              .*            .
```

```
2.216E+02  1.321E-01 .          .              . *           .
2.300E+02  1.469E-01 .          .              . *           .
- - - - - - - - - - - - - - - - - - - - - - - - - - - - - - -
Notch frequency = LC resonant frequency (159.15 Hz)
```

Next, we will examine the parallel resonant band-stop filter:

Parallel resonant band-stop filter

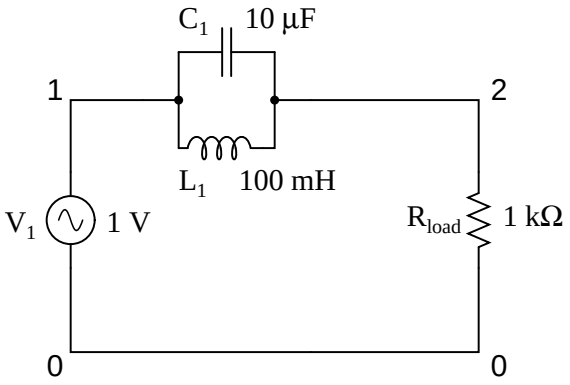

The parallel LC components present a high impedance at resonant frequency, thereby blocking the signal from the load at that frequency. Conversely, it passes signals to the load at any other frequencies.

```
parallel resonant bandstop filter
v1 1 0 ac 1 sin
l1 1 2 100m
c1 1 2 10u
rload 2 0 1k
.ac lin 20 100 200
.plot ac v(2)
.end
```

```
freq       v(2)  3.162E-02  1.000E-01    3.162E-01    1.000E+00
- - - - - - - - - - - - - - - - - - - - - - - - - - - - - - - -
1.000E+02  9.947E-01 .          .              .             *     .
1.053E+02  9.932E-01 .          .              .             *     .
1.105E+02  9.911E-01 .          .              .             *     .
1.158E+02  9.883E-01 .          .              .             *     .
1.211E+02  9.841E-01 .          .              .             *     .
1.263E+02  9.778E-01 .          .              .             *     .
1.316E+02  9.675E-01 .          .              .             *     .
1.368E+02  9.497E-01 .          .              .            *.     .
1.421E+02  9.152E-01 .          .              .            *.     .
1.474E+02  8.388E-01 .          .              .           * .     .
```

```
1.526E+02  6.420E-01 .         .              .        *    .     .
1.579E+02  1.570E-01 .         .    *         .             .     .
1.632E+02  4.450E-01 .         .              .   *         .     .
1.684E+02  7.496E-01 .         .              .        *    .     .
1.737E+02  8.682E-01 .         .              .           * .     .
1.789E+02  9.201E-01 .         .              .            *.     .
1.842E+02  9.465E-01 .         .              .            *.     .
1.895E+02  9.616E-01 .         .              .             *     .
1.947E+02  9.710E-01 .         .              .             *     .
2.000E+02  9.773E-01 .         .              .             *     .
- - - - - - - - - - - - - - - - - - - - - - - - - - - - - - - - - -
Notch frequency = LC resonant frequency (159.15 Hz)
```

Once again, notice how the absence of a series resistor makes for minimum attenuation for all the desired (passed) signals. The amplitude at the notch frequency, on the other hand, is very low. In other words, this is a very "selective" filter.

In all these resonant filter designs, the selectivity depends greatly upon the "purity" of the inductance and capacitance used. If there is any stray resistance (especially likely in the inductor), this will diminish the filter's ability to finely discriminate frequencies, as well as introduce antiresonant effects that will skew the peak/notch frequency.

A word of caution to those designing low-pass and high-pass filters is in order at this point. After assessing the standard RC and LR low-pass and high-pass filter designs, it might occur to a student that a better, more effective design of low-pass or high-pass filter might be realized by combining capacitive and inductive elements together like this:

Capacitive/inductive low-pass filter

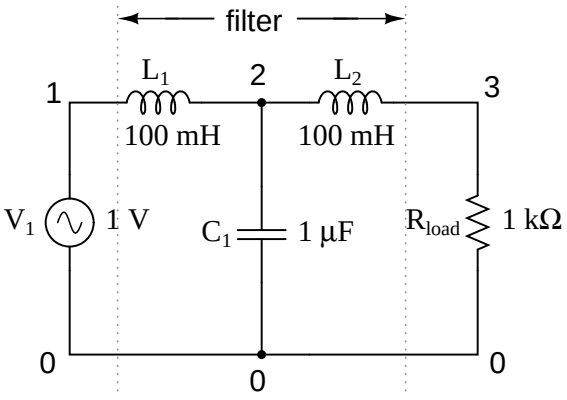

The inductors should block any high frequencies, while the capacitor should short out any high frequencies as well, both working together to allow only low frequency signals to reach the load.

At first, this seems to be a good strategy, and eliminates the need for a series resistance. However, the more insightful student will recognize that any combination of capacitors and inductors together in a circuit is likely to cause resonant effects to happen at a certain frequency. Resonance, as we have seen before, can cause strange things to happen. Let's plot a SPICE analysis and see what happens over a wide frequency range:

```
lc lowpass filter
v1 1 0 ac 1 sin
l1 1 2 100m
c1 2 0 1u
l2 2 3 100m
rload 3 0 1k
.ac lin 20 100 1k
.plot ac v(3)
.end
```

```
freq       v(3)  1.000E-01  3.162E-01    1.000E+00    3.162E+00
- - - - - - - - - - - - - - - - - - - - - - - - - - - - - - - -
1.000E+02  1.033E+00 .          .              *              .
1.474E+02  1.074E+00 .          .              .*             .
1.947E+02  1.136E+00 .          .              . *            .
2.421E+02  1.228E+00 .          .              . *            .
2.895E+02  1.361E+00 .          .              .   *          .
3.368E+02  1.557E+00 .          .              .    *         .
3.842E+02  1.853E+00 .          .              .       *      .
4.316E+02  2.308E+00 .          .              .         *    .
4.789E+02  2.919E+00 .          .              .            *.
5.263E+02  3.185E+00 .          .              .             *
5.737E+02  2.553E+00 .          .              .          *  .
6.211E+02  1.802E+00 .          .              .      *       .
6.684E+02  1.298E+00 .          .              .  *           .
7.158E+02  9.778E-01 .          .              *              .
7.632E+02  7.650E-01 .          .          *   .              .
8.105E+02  6.165E-01 .          .       *      .              .
8.579E+02  5.084E-01 .          .     *        .              .
9.053E+02  4.268E-01 .          .   *          .              .
9.526E+02  3.635E-01 .          . *            .              .
1.000E+03  3.133E-01 .          *              .              .
- - - - - - - - - - - - - - - - - - - - - - - - - - - - - - - -
```

What was supposed to be a low-pass filter turns out to be a band-pass filter with a peak somewhere around 526 Hz! The capacitance and inductance in this filter circuit are attaining resonance at that point, creating a large voltage drop around C_1, which is seen at the load, regardless of L_2's attenuating influence. The output voltage to the load at this point actually exceeds the input (source) voltage! A little more reflection reveals that if L_1 and C_2 are at resonance, they will impose a very heavy (very low impedance) load on the AC source, which might not be good either. We'll run the same analysis again, only this time plotting C_1's voltage and the source current along with load voltage:

```
legend:
*: v(3)
+: v(2)
```

```
=: i(v1)
freq       v(3)
(*)----------  1.000E-01     3.162E-01     1.000E+00     3.162E+00
(+)----------  3.162E-01     1.000E+00     3.162E+00     1.000E+01
(=)----------  1.000E-03     3.162E-03     1.000E-02     3.162E-02
- - - - - - - - - - - - - - - - - - - - - - - - - - - - - - - - - -
1.000E+02  1.033E+00 . =           +             *             .
1.474E+02  1.074E+00 .   =         .+            .*            .
1.947E+02  1.136E+00 .     =       . +           . *           .
2.421E+02  1.228E+00 .       =     .  +          . *           .
2.895E+02  1.361E+00 .          = .   +          .   *         .
3.368E+02  1.557E+00 .            .=    +        .    *        .
3.842E+02  1.853E+00 .            .   =   +      .       *     .
4.316E+02  2.308E+00 .            .       =  +   .         *    .
4.789E+02  2.919E+00 .            .            = +            *.
5.263E+02  3.185E+00 .            .              .x            *
5.737E+02  2.553E+00 .            .            +=.          *  .
6.211E+02  1.802E+00 .            .       + =    .      *      .
6.684E+02  1.298E+00 .            .   +  =       .  *          .
7.158E+02  9.778E-01 .            .+  =          *             .
7.632E+02  7.650E-01 .          + . =         *  .             .
8.105E+02  6.165E-01 .        +   =        *     .             .
8.579E+02  5.084E-01 .      +     =.      *       .             .
9.053E+02  4.268E-01 .    +       = .   *         .             .
9.526E+02  3.635E-01 .   +     =    . *           .             .
1.000E+03  3.133E-01 . +       =    *             .             .
- - - - - - - - - - - - - - - - - - - - - - - - - - - - - - - - - -
```

Sure enough, we see the voltage across C_1 and the source current spiking to a high point at the same frequency where the load voltage is maximum. If we were expecting this filter to provide a simple low-pass function, we might be disappointed by the results.

Despite this unintended resonance, low-pass filters made up of capacitors and inductors are frequently used as final stages in AC/DC power supplies to filter the unwanted AC "ripple" voltage out of the DC converted from AC. Why is this, if this particular filter design possesses a potentially troublesome resonant point?

The answer lies in the selection of filter component sizes and the frequencies encountered from an AC/DC converter (rectifier). What we're trying to do in an AC/DC power supply filter is separate DC voltage from a small amount of relatively high-frequency AC voltage. The filter inductors and capacitors are generally quite large (several Henrys for the inductors and thousands of μF for the capacitors is typical), making the filter's resonant frequency very, very low. DC of course, has a "frequency" of zero, so there's no way it can make an LC circuit resonate. The ripple voltage, on the other hand, is a non-sinusoidal AC voltage consisting of a fundamental frequency at least twice the frequency of the converted AC voltage, with harmonics many times that in addition. For plug-in-the-wall power supplies running on 60 Hz AC power (60 Hz United States; 50 Hz in Europe), the lowest frequency the filter will ever see is 120 Hz (100 Hz in Europe), which is well above its resonant point. Therefore, the potentially troublesome resonant point in a such a filter is completely

avoided.

The following SPICE analysis calculates the voltage output (AC and DC) for such a filter, with series DC and AC (120 Hz) voltage sources providing a rough approximation of the mixed-frequency output of an AC/DC converter.

AC/DC power supply filter

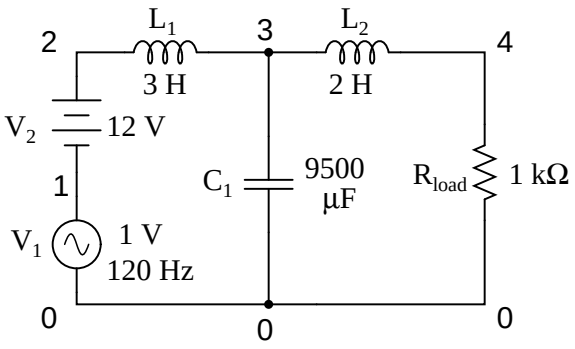


```
ac/dc power supply filter
v1 1 0 ac 1 sin
v2 2 1 dc
l1 2 3 3
c1 3 0 9500u
l2 3 4 2
rload 4 0 1k
.dc v2 12 12 1
.ac lin 1 120 120
.print dc v(4)
.print ac v(4)
.end

v2              v(4)
1.200E+01       1.200E+01   DC voltage at load = 12 volts

freq            v(4)
1.200E+02       3.412E-05   AC voltage at load = 34.12 microvolts
```

With a full 12 volts DC at the load and only 34.12 μV of AC left from the 1 volt AC source imposed across the load, this circuit design proves itself to be a very effective power supply filter.

The lesson learned here about resonant effects also applies to the design of high-pass filters using both capacitors and inductors. So long as the desired and undesired frequencies are well to either side of the resonant point, the filter will work okay. But if any signal of significant magnitude close to the resonant frequency is applied to the input of the filter, strange things will happen!

- **REVIEW:**

- Resonant combinations of capacitance and inductance can be employed to create very effective band-pass and band-stop filters without the need for added resistance in a circuit that would diminish the passage of desired frequencies.

- $$f_{resonant} = \frac{1}{2\pi \sqrt{LC}}$$

8.7 Summary

As lengthy as this chapter has been up to this point, it only begins to scratch the surface of filter design. A quick perusal of any advanced filter design textbook is sufficient to prove my point. The mathematics involved with component selection and frequency response prediction is daunting to say the least – well beyond the scope of the beginning electronics student. It has been my intent here to present the basic principles of filter design with as little math as possible, leaning on the power of the SPICE circuit analysis program to explore filter performance. The benefit of such computer simulation software cannot be understated, for the beginning student or for the working engineer.

Circuit simulation software empowers the student to explore circuit designs far beyond the reach of their math skills. With the ability to generate Bode plots and precise figures, an intuitive understanding of circuit concepts can be attained, which is something often lost when a student is burdened with the task of solving lengthy equations by hand. If you are not familiar with the use of SPICE or other circuit simulation programs, take the time to become so! It will be of great benefit to your study. To see SPICE analyses presented in this book is an aid to understanding circuits, but to actually set up and analyze your own circuit simulations is a much more engaging and worthwhile endeavor as a student.

Chapter 9

TRANSFORMERS

9.1 Mutual inductance and basic operation

As we have already seen, the magnetic field produced by a current-carrying conductor can store energy. This storage of energy translates to an opposition to changes in current through that conductor. Called "inductance," this effect can be made more pronounced by forming the conductor into a coil, and/or providing a path of high magnetic permeability for the magnetic field to develop.

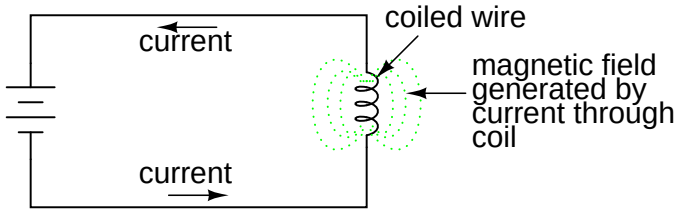

An approximate figure for an inductor's inductance can be found using this equation:

$$L = \frac{N^2 \mu A}{l}$$

Where,

L = Inductance of coil in Henrys
N = Number of turns in wire coil (straight wire = 1)
μ = Permeability of core material (absolute, not relative)
A = Area of coil in square meters
l = Average length of coil in meters

We also know that an inductor exposed to a changing magnetic field will develop a voltage across its length. The inductor's opposition to changes in current is a manifestation of this effect, the induced voltage produced by the change in its own magnetic field strength producing a voltage which tries to maintain current at that same magnitude and in that same direction. This is called "self-induction." The greater the inductor's inductance (measured in the unit of Henrys), the more

self-induced voltage will be produced for a given rate of current change over time.

It should stand to reason, then, that if a changing magnetic field produced by one inductor carrying alternating current were to "link" with the turns of wire in another inductor, it would induce an AC voltage in the unpowered inductor. This is definitely the case, and the phenomenon is called *mutual inductance*. A device constructed to exploit this effect is called a *transformer*. The symbol for a transformer looks like this:

Transformer

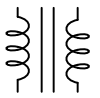

The two inductor coils are easily distinguished in the above symbol. The pair of vertical lines represent an iron core common to both inductors. While many transformers have ferromagnetic core materials, there are some that do not, their constituent inductors being magnetically linked together through the air. The following photograph shows two inductor coils wound around a tube form, for the purpose of forming a mutual inductance standard. While most transformer designs enclose the coils and core in a metal frame for protection, this device is open for viewing and so serves its illustrative purpose well:

One coil of wire can be seen here with copper-colored varnish insulation. The other coil, much greater in length, has an insulation layer that is green in color.

By having two inductors coupled together by a common magnetic field path, it is possible to *transfer* energy from one inductor circuit to the other, rather than just *store* energy in the magnetic field. In order for this to work, of course, the magnetic field has to be constantly changing in strength, otherwise no voltage will be induced in the unpowered coil. Thus, the transformer is essentially an alternating current (AC) device.

In transformers, the inductor coils are often referred to as *windings*, in reference to the manufacturing process where wire is *wound* around the core material. The powered inductor of a transformer is called the *primary* winding, while the unpowered coil is called the *secondary* winding. It is easy to

demonstrate simple transformer action using SPICE, setting up the primary and secondary windings of the simulated transformer as a pair of "mutual" inductors. The coefficient of magnetic field coupling is given at the end of the "k" line in the SPICE circuit description, this example being set very nearly at perfection (1.000). This coefficient describes how closely "linked" the two inductors are, magnetically. The better these two inductors are magnetically coupled, the more efficient the energy transfer between them should be.

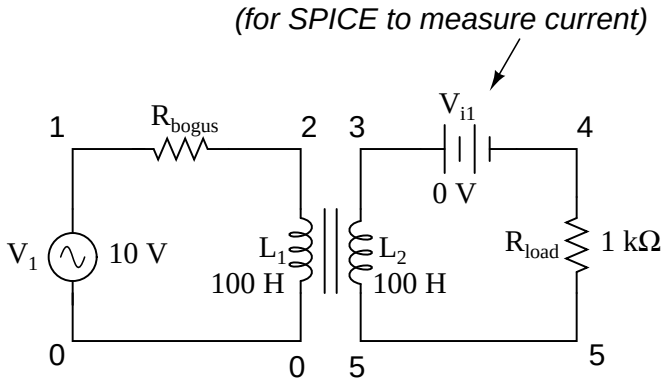


```
transformer
v1 1 0 ac 10 sin
rbogus1 1 2 1e-12   required to satisfy a quirk of SPICE
rbogus2 5 0 9e12    ditto
l1 2 0 100
l2 3 5 100
k l1 l2 0.999       This line tells SPICE that the two inductors
vi1 3 4 ac 0        l1 and l2 are magnetically "linked" together
rload 4 5 1k
.ac lin 1 60 60
.print ac v(2,0) i(v1)
.print ac v(3,5) i(vi1)
.end

freq          v(2)        i(v1)
6.000E+01     1.000E+01   9.975E-03   Primary winding

freq          v(3,5)      i(vi1)
6.000E+01     9.962E+00   9.962E-03   Secondary winding
```

Note that with equal inductances for both windings (100 Henrys each), the AC voltages and currents are nearly equal for the two. What you are seeing here is quite typical of transformer efficiency. Anything less than 95% efficiency is considered poor for modern power transformer designs, and this transfer of power occurs with no moving parts or other components subject to wear.

If we decrease the load resistance so as to draw more current with the same amount of voltage, we see that the current through the primary winding increases in response. Even though the AC power source is not directly connected to the load resistance (rather, it is electromagnetically "coupled"), the amount of current drawn from the source will be almost the same as the amount of current that would be drawn if the load were directly connected to the source. Take a close look at the next two SPICE simulations, showing what happens with different values of load resistors:

```
transformer
v1 1 0 ac 10 sin
rbogus1 1 2 1e-12
rbogus2 5 0 9e12
l1 2 0 100
l2 3 5 100
k l1 l2 0.999
vi1 3 4 ac 0
rload 4 5 200       Note load resistance value of 200 ohms
.ac lin 1 60 60
.print ac v(2,0) i(v1)
.print ac v(3,5) i(vi1)
.end

freq          v(2)        i(v1)
6.000E+01     1.000E+01   4.679E-02

freq          v(3,5)      i(vi1)
6.000E+01     9.348E+00   4.674E-02
```

Notice how the primary current closely follows the secondary current. In our first simulation, both currents were approximately 10 mA, but now they are both around 47 mA. Note also how the secondary voltage has decreased some with the heavier (greater current) load. Let's try another simulation with an even lower value of load resistance:

```
transformer
v1 1 0 ac 10 sin
rbogus1 1 2 1e-12
rbogus2 5 0 9e12
l1 2 0 100
l2 3 5 100
k l1 l2 0.999
vi1 3 4 ac 0
rload 4 5 15
.ac lin 1 60 60
.print ac v(2,0) i(v1)
.print ac v(3,5) i(vi1)
.end
```

```
freq          v(2)        i(v1)
6.000E+01     1.000E+01   1.301E-01

freq          v(3,5)      i(vi1)
6.000E+01     1.950E+00   1.300E-01
```

Our load current is now 0.13 amps, or 130 mA, which is substantially higher than the last time. The primary current is very close to being the same, but notice how the secondary voltage has fallen well below the primary voltage (1.95 volts versus 10 volts at the primary). The reason for this is our transformer design: the windings have too much inductance (100 Henrys each), and therefore too much inductive reactance (impedance) to allow for these high currents. If we change the design to have less inductance, the figures for voltage between primary and secondary windings will be much closer to being equal again:

```
transformer
v1 1 0 ac 10 sin
rbogus1 1 2 1e-12
rbogus2 5 0 9e12
l1 2 0 1            1 henry rather than 100 henrys
l2 3 5 1            1 henry rather than 100 henrys
k l1 l2 0.999
vi1 3 4 ac 0
rload 4 5 15
.ac lin 1 60 60
.print ac v(2,0) i(v1)
.print ac v(3,5) i(vi1)
.end

freq          v(2)        i(v1)
6.000E+01     1.000E+01   6.664E-01

freq          v(3,5)      i(vi1)
6.000E+01     9.977E+00   6.652E-01
```

Here we see that our secondary voltage is back to being nearly equal with the primary, and the secondary current, as usual, is nearly equal to the primary current as well. The question naturally arises at this point: if excessive inductance was a problem, then why not design all transformers with as little inductance as possible? The answer to this question can be found in the next SPICE simulation, taking the low-inductance transformer we just created and using it to transfer power to a higher resistance load (back up to 1 kΩ as in the first demonstration):

```
transformer
v1 1 0 ac 10 sin
rbogus1 1 2 1e-12
rbogus2 5 0 9e12
l1 2 0 1
```

```
l2 3 5 1
k l1 l2 0.999
vi1 3 4 ac 0
rload 4 5 1k
.ac lin 1 60 60
.print ac v(2,0) i(v1)
.print ac v(3,5) i(vi1)
.end

freq          v(2)        i(v1)
6.000E+01     1.000E+01   2.835E-02

freq          v(3,5)      i(vi1)
6.000E+01     9.990E+00   9.990E-03
```

With lower winding inductances, the primary and secondary voltages are closer to being equal, but the primary and secondary currents are not. In this particular case, the primary current is 28.35 mA while the secondary current is only 9.990 mA: almost three times as much current in the primary as the secondary. Why is this? With less inductance in the primary winding, there is less inductive reactance, less impedance to hold back current. A substantial amount of the current through the primary winding is due to that winding's reactance alone and not the transfer of power to the secondary winding and load.

An ideal transformer with identical primary and secondary windings would manifest equal voltage and current in both sets of windings. In a perfect world transformers would transfer electrical power from primary to secondary as smoothly as though the load were directly connected to the primary power source, with no transformer there at all, but as you can see this ideal goal cannot be met by any one transformer design under all operating conditions. Transformers *must* be designed to operate within certain expected ranges of voltages and loads in order to perform as close to ideal as possible. For now, the most important thing to keep in mind is a transformer's basic operating principle: the transfer of power from the primary to the secondary circuit via electromagnetic coupling.

- **REVIEW:**
- *Mutual inductance* is where the magnetic field paths of two or more inductors are "linked" so as to produce the effect of current changes in one inductor inducing voltages in the other(s).
- A *transformer* is a device made of two or more inductors, one of which is powered by AC, inducing an AC voltage across the second inductor. If the second inductor is connected to a load, power will be electromagnetically coupled from the first inductor's power source to that load.
- The powered inductor in a transformer is called the *primary winding*. The unpowered inductor in a transformer is called the *secondary winding*.

9.2 Step-up and step-down transformers

So far, we've observed simulations of transformers where the primary and secondary windings were of identical inductance, giving approximately equal voltage and current levels in both circuits. Equality

of voltage and current between the primary and secondary sides of a transformer, however, is not the norm for all transformers. If the inductances of the two windings are not equal, something interesting happens:

```
transformer
v1 1 0 ac 10 sin
rbogus1 1 2 1e-12
rbogus2 5 0 9e12
l1 2 0 10000
l2 3 5 100
k l1 l2 0.999
vi1 3 4 ac 0
rload 4 5 1k
.ac lin 1 60 60
.print ac v(2,0) i(v1)
.print ac v(3,5) i(vi1)
.end

freq          v(2)        i(v1)
6.000E+01     1.000E+01   9.975E-05    Primary winding

freq          v(3,5)      i(vi1)
6.000E+01     9.962E-01   9.962E-04    Secondary winding
```

Notice how the secondary voltage is approximately ten times less than the primary voltage (0.9962 volts compared to 10 volts), while the secondary current is approximately ten times greater (0.9962 mA compared to 0.09975 mA). What we have here is a device that steps voltage *down* by a factor of ten and current *up* by a factor of ten:

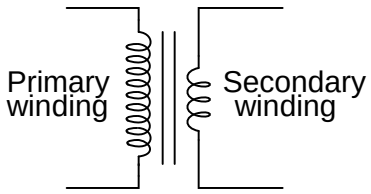

10:1 primary:secondary voltage ratio

1:10 primary:secondary current ratio

What we have here is a very useful device, indeed. With it, we can easily multiply or divide voltage and current in AC circuits. Indeed, the transformer has made long-distance transmission of electric power a practical reality, as AC voltage can be "stepped up" and current "stepped down" for reduced wire resistance power losses along power lines connecting generating stations with loads. At either end (both the generator and at the loads), voltage levels are reduced by transformers for safer operation and less expensive equipment. A transformer that increases voltage

from primary to secondary (more secondary winding turns than primary winding turns) is called a *step-up* transformer. Conversely, a transformer designed to do just the opposite is called a *step-down* transformer.

In case you were wondering, it *is* possible to operate either of these transformer types backwards (powering the secondary winding with an AC source and letting the primary winding power a load) to perform the opposite function: a step-up can function as a step-down and visa-versa. However, as we saw in the first section of this chapter, efficient operation of a transformer requires that the individual winding inductances be engineered for specific operating ranges of voltage and current, so if a transformer is to be used "backwards" like this it must be employed within the original design parameters of voltage and current for each winding, lest it prove to be inefficient (or lest it be *damaged* by excessive voltage or current!).

Transformers are often constructed in such a way that it is not obvious which wires lead to the primary winding and which lead to the secondary. One convention used in the electric power industry to help alleviate confusion is the use of "H" designations for the higher-voltage winding (the primary winding in a step-down unit; the secondary winding in a step-up) and "X" designations for the lower-voltage winding. Therefore, a simple power transformer will have wires labeled "H_1", "H_2", "X_1", and "X_2". There is usually significance to the numbering of the wires (H_1 vs. H_2, etc.), which we'll explore a little later in this chapter.

The fact that voltage and current get "stepped" in opposite directions (one up, the other down) makes perfect sense when you recall that power is equal to voltage times current, and realize that transformers cannot *produce* power, only convert it. Any device that could output more power than it took in would violate the *Law of Energy Conservation* in physics, namely that energy cannot be created or destroyed, only converted. As with the first transformer example we looked at, power transfer efficiency is very good from the primary to the secondary sides of the device.

The practical significance of this is made more apparent when an alternative is considered: before the advent of efficient transformers, voltage/current level conversion could only be achieved through the use of motor/generator sets. A drawing of a motor/generator set reveals the basic principle involved:

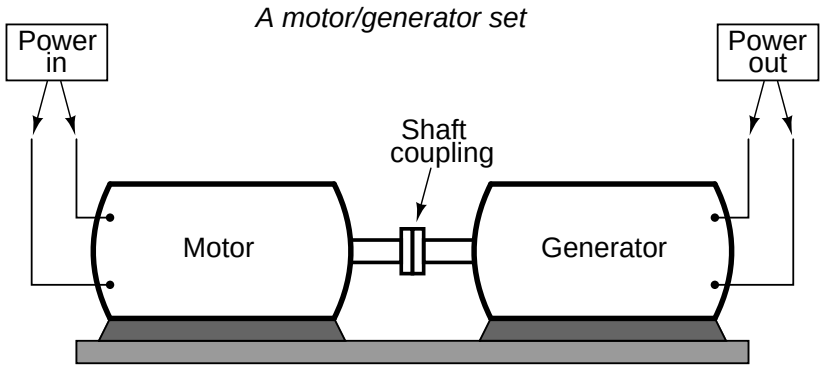

In such a machine, a motor is mechanically coupled to a generator, the generator designed to produce the desired levels of voltage and current at the rotating speed of the motor. While both motors and generators are fairly efficient devices, the use of both in this fashion compounds their inefficiencies so that the overall efficiency is in the range of 90% or less. Furthermore, because motor/generator sets obviously require moving parts, mechanical wear and balance are factors in-

fluencing both service life and performance. Transformers, on the other hand, are able to convert levels of AC voltage and current at very high efficiencies with no moving parts, making possible the widespread distribution and use of electric power we take for granted.

In all fairness it should be noted that motor/generator sets have not necessarily been obsoleted by transformers for *all* applications. While transformers are clearly superior over motor/generator sets for AC voltage and current level conversion, they cannot convert one frequency of AC power to another, or (by themselves) convert DC to AC or visa-versa. Motor/generator sets can do all these things with relative simplicity, albeit with the limitations of efficiency and mechanical factors already described. Motor/generator sets also have the unique property of kinetic energy storage: that is, if the motor's power supply is momentarily interrupted for any reason, its angular momentum (the inertia of that rotating mass) will maintain rotation of the generator for a short duration, thus isolating any loads powered by the generator from "glitches" in the main power system.

Looking closely at the numbers in the SPICE analysis, we should see a correspondence between the transformer's ratio and the two inductances. Notice how the primary inductor (l1) has 100 times more inductance than the secondary inductor (10000 H versus 100 H), and that the measured voltage step-down ratio was 10 to 1. The winding with more inductance will have higher voltage and less current than the other. Since the two inductors are wound around the same core material in the transformer (for the most efficient magnetic coupling between the two), the parameters affecting inductance for the two coils are equal except for the number of turns in each coil. If we take another look at our inductance formula, we see that inductance is proportional to the *square* of the number of coil turns:

$$L = \frac{N^2 \mu A}{l}$$

Where,

L = Inductance of coil in Henrys
N = Number of turns in wire coil (straight wire = 1)
μ = Permeability of core material (absolute, not relative)
A = Area of coil in square meters
l = Average length of coil in meters

So, it should be apparent that our two inductors in the last SPICE transformer example circuit – with inductance ratios of 100:1 – should have coil turn ratios of 10:1, because 10 squared equals 100. This works out to be the same ratio we found between primary and secondary voltages and currents (10:1), so we can say as a rule that the voltage and current transformation ratio is equal to the ratio of winding turns between primary and secondary.

Step-down transformer

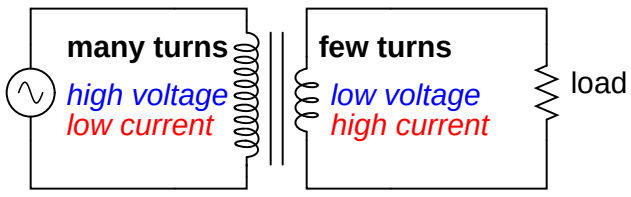

The step-up/step-down effect of coil turn ratios in a transformer is analogous to gear tooth ratios in mechanical gear systems, transforming values of speed and torque in much the same way:

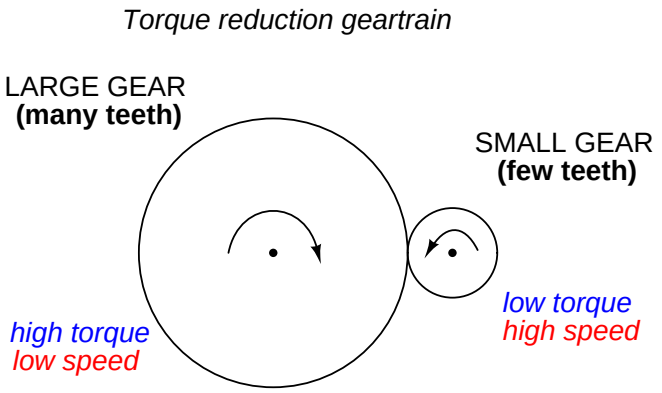

A small step-down power transformer used to convert 120 volt AC to 6.3 volt AC is shown on the left in the following photograph:

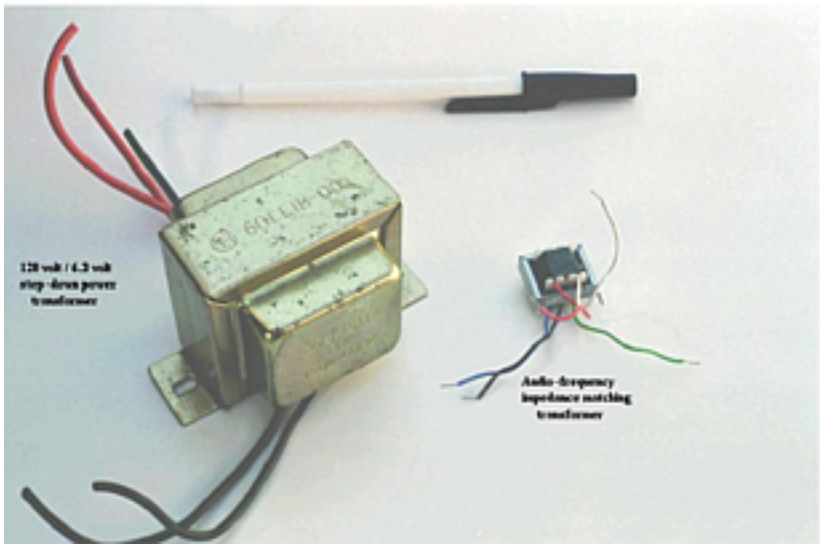

Step-up and step-down transformers for power distribution purposes can be gigantic in proportion to the small transformer shown above, some units standing as tall as a home.

- **REVIEW:**

- Transformers "step up" or "step down" voltage according to the ratios of primary to secondary wire turns.

$$\text{Voltage transformation ratio} = \frac{N_{secondary}}{N_{primary}}$$

$$\text{Current transformation ratio} = \frac{N_{primary}}{N_{secondary}}$$

Where,

N = number of turns in winding

- A transformer designed to increase voltage from primary to secondary is called a *step-up* transformer. A transformer designed to reduce voltage from primary to secondary is called a *step-down* transformer.
- The transformation ratio of a transformer will be equal to the square root of its primary to secondary inductance (L) ratio.
- $$\text{Voltage transformation ratio} = \sqrt{\frac{L_{secondary}}{L_{primary}}}$$

9.3 Electrical isolation

Aside from the ability to easily convert between different levels of voltage and current in AC and DC circuits, transformers also provide an extremely useful feature called *isolation*, which is the ability to couple one circuit to another without the use of direct wire connections. We can demonstrate an application of this effect with another SPICE simulation: this time showing "ground" connections for the two circuits, imposing a high DC voltage between one circuit and ground through the use of an additional voltage source:

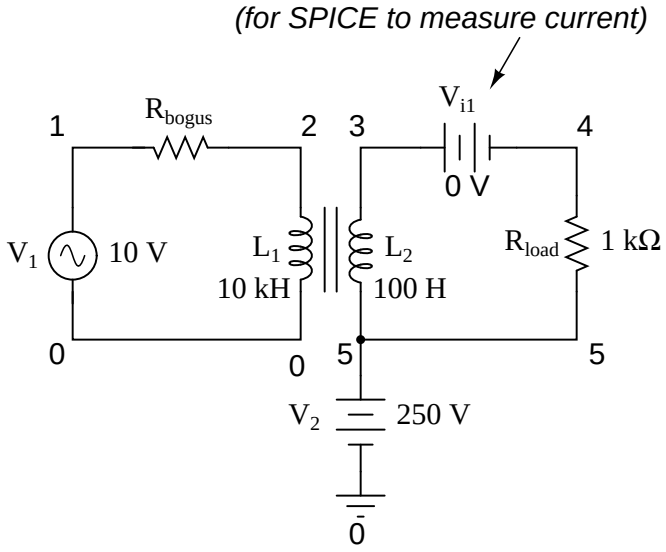

```
v1 1 0 ac 10 sin
rbogus1 1 2 1e-12
v2 5 0 dc 250
l1 2 0 10000
l2 3 5 100
k l1 l2 0.999
vi1 3 4 ac 0
rload 4 5 1k
.ac lin 1 60 60
.print ac v(2,0) i(v1)
.print ac v(3,5) i(vi1)
.end

DC voltages referenced to ground (node 0):
(1)    0.0000    (2)    0.0000    (3)  250.0000
(4)  250.0000    (5)  250.0000

AC voltages:
freq          v(2)        i(v1)
6.000E+01     1.000E+01   9.975E-05    Primary winding

freq          v(3,5)      i(vi1)
6.000E+01     9.962E-01   9.962E-04    Secondary winding
```

SPICE shows the 250 volts DC being impressed upon the secondary circuit elements with respect to ground, but as you can see there is no effect on the primary circuit (zero DC voltage) at nodes 1 and 2, and the transformation of AC power from primary to secondary circuits remains the same as before. The impressed voltage in this example is often called a *common-mode* voltage because it is seen at more than one point in the circuit with reference to the common point of ground. The transformer isolates the common-mode voltage so that it is not impressed upon the primary circuit at all, but rather isolated to the secondary side. For the record, it does not matter that the common-mode voltage is DC, either. It could be AC, even at a different frequency, and the transformer would isolate it from the primary circuit all the same.

There are applications where electrical isolation is needed between two AC circuit without any transformation of voltage or current levels. In these instances, transformers called *isolation transformers* having 1:1 transformation ratios are used.

- **REVIEW:**
- By being able to transfer power from one circuit to another without the use of interconnecting conductors between the two circuits, transformers provide the useful feature of *electrical isolation.*
- Transformers designed to provide electrical isolation without stepping voltage and current either up or down are called *isolation transformers.*

9.4 Phasing

Since transformers are essentially AC devices, we need to be aware of the phase relationships between the primary and secondary circuits. Using our SPICE example from before, we can plot the waveshapes for the primary and secondary circuits and see the phase relations for ourselves:

```
legend:
*: v(2)     Primary voltage
+: v(3,5)   Secondary voltage
time       v(2)
(*)-----------     -10         -5          0          5         10
(+)-----------     -10         -5          0          5         10
- - - - - - - - - - - - - - - - - - - - - - - - - - - - - - - - - -
0.000E+00  0.000E+00 .          .          x          .          .
1.000E-03  3.675E+00 .          .          .    + *   .          .
2.000E-03  6.803E+00 .          .          .          . + *      .
3.000E-03  9.008E+00 .          .          .          .      +*  .
4.000E-03  9.955E+00 .          .          .          .          x
5.000E-03  9.450E+00 .          .          .          .        *+.
6.000E-03  7.672E+00 .          .          .          .    * +   .
7.000E-03  4.804E+00 .          .          .        *.+         .
8.000E-03  1.245E+00 .          .          .  *  +    .          .
9.000E-03 -2.474E+00 .          .     * +  .          .          .
1.000E-02 -5.864E+00 .         *+          .          .          .
1.100E-02 -8.390E+00 .    *+    .          .          .          .
1.200E-02 -9.779E+00 .x         .          .          .          .
1.300E-02 -9.798E+00 +*         .          .          .          .
1.400E-02 -8.390E+00 .   +*     .          .          .          .
1.500E-02 -5.854E+00 .       + *.          .          .          .
1.600E-02 -2.479E+00 .          .    + *   .          .          .
1.700E-02  1.246E+00 .          .          .+ *       .          .
1.800E-02  4.795E+00 .          .          .       + *.          .
1.900E-02  7.686E+00 .          .          .          .   + *    .
2.000E-02  9.451E+00 .          .          .          .        x .
2.100E-02  9.937E+00 .          .          .          .          x
2.200E-02  9.025E+00 .          .          .          .       *+ .
2.300E-02  6.802E+00 .          .          .          .  *+       .
2.400E-02  3.667E+00 .          .          .      * + .          .
2.500E-02 -1.487E-03 .          .          * +        .          .
2.600E-02 -3.658E+00 .          .   * +    .          .          .
2.700E-02 -6.814E+00 .      * + .          .          .          .
2.800E-02 -9.026E+00 .  *+      .          .          .          .
2.900E-02 -9.917E+00 *+         .          .          .          .
3.000E-02 -9.511E+00 .x         .          .          .          .
- - - - - - - - - - - - - - - - - - - - - - - - - - - - - - - - - -
```

```
legend:
*: i(v1)   Primary current
+: i(vi1)  Secondary current
time      i(v1)
(*)---------- -2.000E-04   -1.000E-04      0   1.000E-04  2.000E-04
(+)---------- -1.000E-03   -5.000E-04      0   5.000E-04  1.000E-03
- - - - - - - - - - - - - - - - - - - - - - - - - - - - - - - - - -
0.000E+00  0.000E+00 .          .          x          .          .
1.000E-03 -2.973E-05 .          .     +    *.         .          .
2.000E-03 -6.279E-05 .        + .    *     .          .          .
3.000E-03 -8.772E-05 .   +      . *        .          .          .
4.000E-03 -1.008E-04 +          *          .          .          .
5.000E-03 -9.954E-05 .+         *          .          .          .
6.000E-03 -8.522E-05 .    +     . *        .          .          .
7.000E-03 -5.919E-05 .         +.     *    .          .          .
8.000E-03 -2.500E-05 .          .       + *.          .          .
9.000E-03  1.212E-05 .          .          . *  +     .          .
1.000E-02  4.736E-05 .          .          .     *    .+         .
1.100E-02  7.521E-05 .          .          .       *  .     +    .
1.200E-02  9.250E-05 .          .          .         *.         +.
1.300E-02  9.648E-05 .          .          .         *.          +
1.400E-02  8.602E-05 .          .          .        * .      +   .
1.500E-02  6.362E-05 .          .          .     *    . +        .
1.600E-02  3.177E-05 .          .          .  *  +    .          .
1.700E-02 -4.998E-06 .          .          x          .          .
1.800E-02 -4.136E-05 .          .  +    *  .          .          .
1.900E-02 -7.246E-05 .     +    .   *      .          .          .
2.000E-02 -9.331E-05 . +        .*         .          .          .
2.100E-02 -1.019E-04 +          *          .          .          .
2.200E-02 -9.651E-05 . +        *          .          .          .
2.300E-02 -7.749E-05 .     +    .  *       .          .          .
2.400E-02 -4.842E-05 .          . +    *   .          .          .
2.500E-02 -1.275E-05 .          .         x.          .          .
2.600E-02  2.428E-05 .          .          .  *  +    .          .
2.700E-02  5.761E-05 .          .          .     *    .+         .
2.800E-02  8.261E-05 .          .          .        * .       +  .
2.900E-02  9.514E-05 .          .          .         *.         +.
3.000E-02  9.487E-05 .          .          .         *.         +.
- - - - - - - - - - - - - - - - - - - - - - - - - - - - - - - - - -
```

It would appear that both voltage and current for the two transformer windings are in phase with each other, at least for our resistive load. This is simple enough, but it would be nice to know *which way* we should connect a transformer in order to ensure the proper phase relationships be kept. After all, a transformer is nothing more than a set of magnetically-linked inductors, and inductors don't usually come with polarity markings of any kind. If we were to look at an unmarked transformer, we would have no way of knowing which way to hook it up to a circuit to get in-phase

(or 180° out-of-phase) voltage and current:

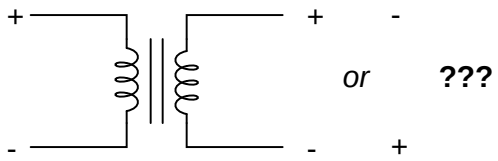

Since this is a practical concern, transformer manufacturers have come up with a sort of polarity marking standard to denote phase relationships. It is called the *dot convention*, and is nothing more than a dot placed next to each corresponding leg of a transformer winding:

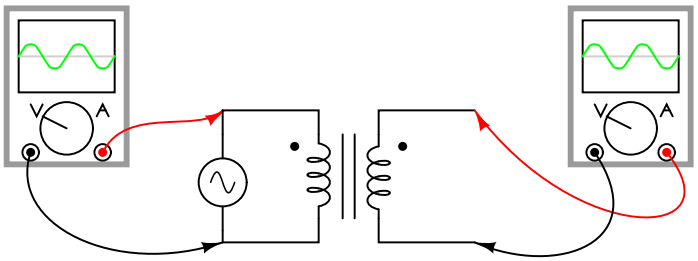

Typically, the transformer will come with some kind of schematic diagram labeling the wire leads for primary and secondary windings. On the diagram will be a pair of dots similar to what is seen above. Sometimes dots will be omitted, but when "H" and "X" labels are used to label transformer winding wires, the subscript numbers are supposed to represent winding polarity. The "1" wires (H_1 and X_1) represent where the polarity-marking dots would normally be placed.

The similar placement of these dots next to the top ends of the primary and secondary windings tells us that whatever instantaneous voltage polarity seen across the primary winding will be the same as that across the secondary winding. In other words, the phase shift from primary to secondary will be zero degrees.

On the other hand, if the dots on each winding of the transformer do *not* match up, the phase shift will be 180° between primary and secondary, like this:

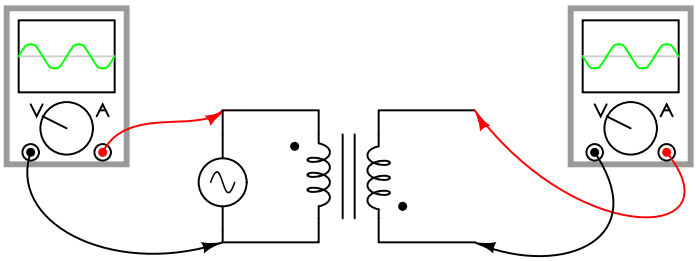

Of course, the dot convention only tells you which end of each winding is which, relative to the other winding(s). If you want to reverse the phase relationship yourself, all you have to do is swap the winding connections like this:

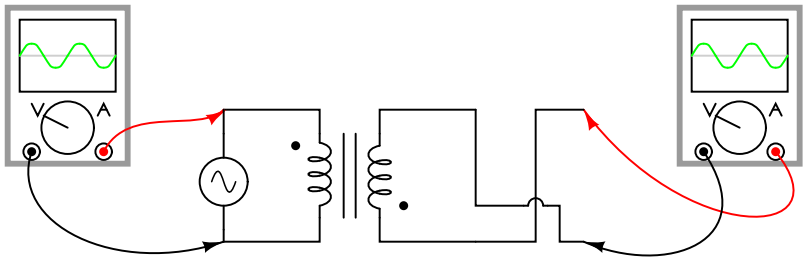

- **REVIEW:**

- The phase relationships for voltage and current between primary and secondary circuits of a transformer are direct: ideally, zero phase shift.

- The *dot convention* is a type of polarity marking for transformer windings showing which end of the winding is which, relative to the other windings.

9.5 Winding configurations

Transformers are very versatile devices. The basic concept of energy transfer between mutual inductors is useful enough between a single primary and single secondary coil, but transformers don't have to be made with just two sets of windings. Consider this transformer circuit:

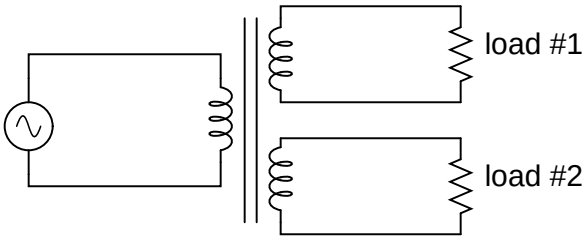

Here, three inductor coils share a common magnetic core, magnetically "coupling" or "linking" them together. The relationship of winding turn ratios and voltage ratios seen with a single pair of mutual inductors still holds true here for multiple pairs of coils. It is entirely possible to assemble a transformer such as the one above (one primary winding, two secondary windings) in which one secondary winding is a step-down and the other is a step-up. In fact, this design of transformer was quite common in vacuum tube power supply circuits, which were required to supply low voltage for the tubes' filaments (typically 6 or 12 volts) and high voltage for the tubes' plates (several hundred volts) from a nominal primary voltage of 110 volts AC. Not only are voltages and currents of completely different magnitudes possible with such a transformer, but all circuits are electrically isolated from one another.

If electrical isolation between secondary circuits is not of great importance, a similar effect can be obtained by "tapping" a single secondary winding at multiple points along its length, like this:

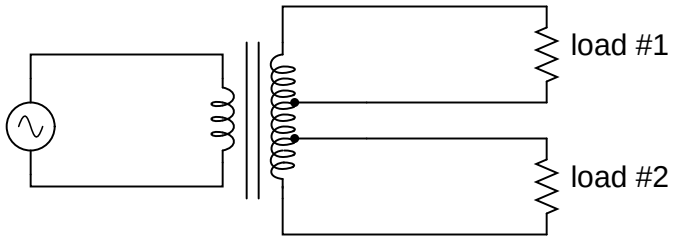

A tap is nothing more than a wire connection made at some point on a winding between the very ends. Not surprisingly, the winding turn/voltage magnitude relationship of a normal transformer holds true for all tapped segments of windings. This fact can be exploited to produce a transformer capable of multiple ratios:

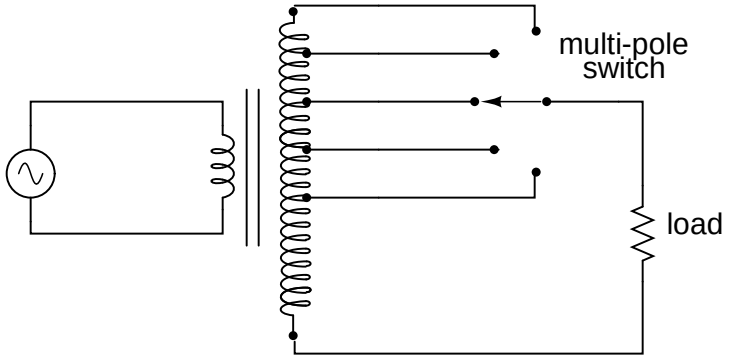

Carrying the concept of winding taps further, we end up with a "variable transformer," where a sliding contact is moved along the length of an exposed secondary winding, able to connect with it at any point along its length. The effect is equivalent to having a winding tap at every turn of the winding, and a switch with poles at every tap position:

Variable transformer

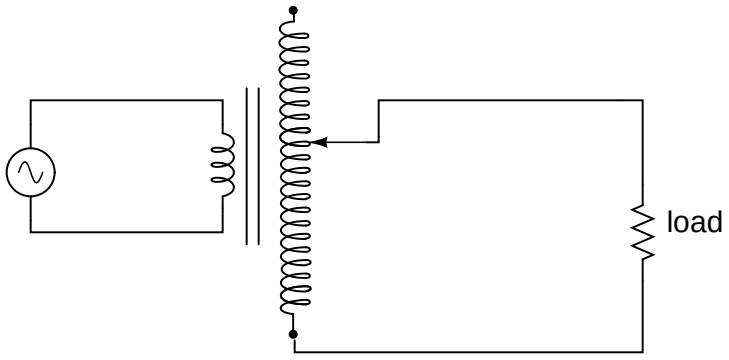

One consumer application of the variable transformer is in speed controls for model train sets, especially the train sets of the 1950's and 1960's. These transformers were essentially step-down units, the highest voltage obtainable from the secondary winding being substantially less than the

primary voltage of 110 to 120 volts AC. The variable-sweep contact provided a simple means of voltage control with little wasted power, much more efficient than control using a variable resistor!

Moving-slide contacts are too impractical to be used in large industrial power transformer designs, but multi-pole switches and winding taps are common for voltage adjustment. Adjustments need to be made periodically in power systems to accommodate changes in loads over months or years in time, and these switching circuits provide a convenient means. Typically, such "tap switches" are not engineered to handle full-load current, but must be actuated only when the transformer has been de-energized (no power).

Seeing as how we can tap any transformer winding to obtain the equivalent of several windings (albeit with loss of electrical isolation between them), it makes sense that it should be possible to forego electrical isolation altogether and build a transformer from a single winding. Indeed this is possible, and the resulting device is called an *autotransformer*:

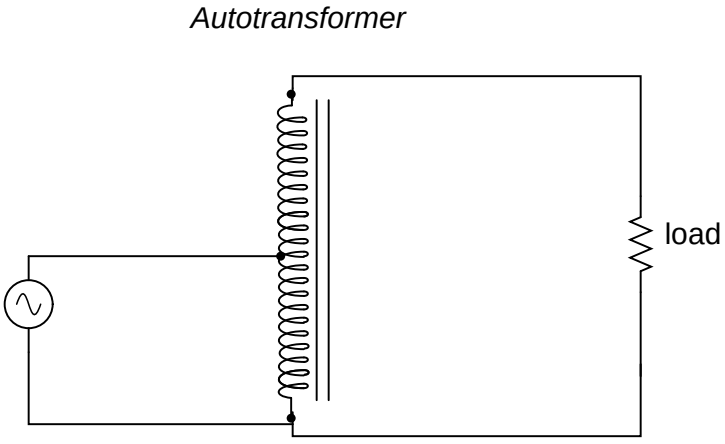

The autotransformer depicted above performs a voltage step-up function. A step-down autotransformer would look something like this:

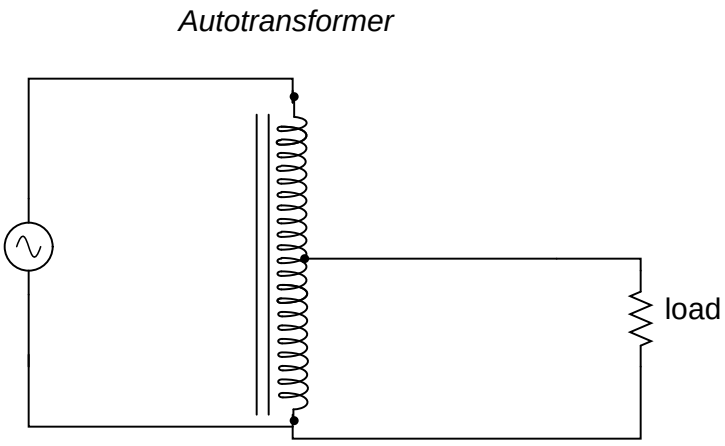

Autotransformers find popular use in applications requiring a slight boost or reduction in voltage to a load. The alternative with a normal (isolated) transformer would be to either have just the

right primary/secondary winding ratio made for the job or use a step-down configuration with the secondary winding connected in series-aiding ("boosting") or series-opposing ("bucking") fashion. Primary, secondary, and load voltages are given to illustrate how this would work.

First, the "boosting" configuration. Here, the secondary coil's polarity is oriented so that its voltage directly adds to the primary voltage:

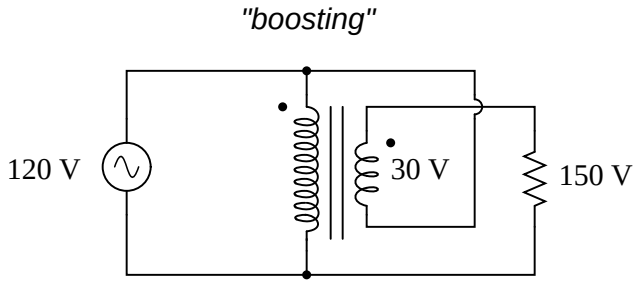

Next, the "bucking" configuration. Here, the secondary coil's polarity is oriented so that its voltage directly subtracts from the primary voltage:

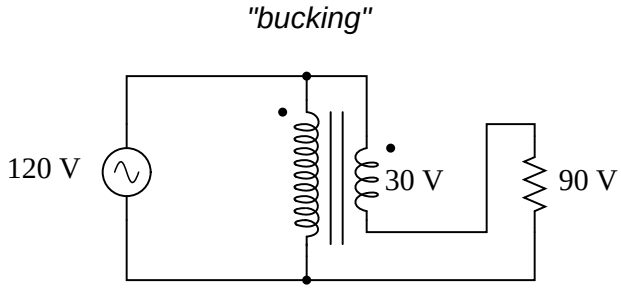

The prime advantage of an autotransformer is that the same boosting or bucking function is obtained with only a single winding, making it cheaper and lighter to manufacture than a regular (isolating) transformer having both primary and secondary windings.

Like regular transformers, autotransformer windings can be tapped to provide variations in ratio. Additionally, they can be made continuously variable with a sliding contact to tap the winding at any point along its length. The latter configuration is popular enough to have earned itself its own name: the *Variac*.

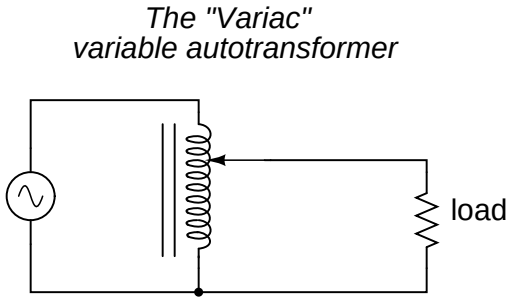

Small variacs for benchtop use are popular pieces of equipment for the electronics experimenter,

being able to step household AC voltage down (or sometimes up as well) with a wide, fine range of control by a simple twist of a knob.

- **REVIEW:**
- Transformers can be equipped with more than just a single primary and single secondary winding pair. This allows for multiple step-up and/or step-down ratios in the same device.
- Transformer windings can also be "tapped:" that is, intersected at many points to segment a single winding into sections.
- Variable transformers can be made by providing a movable arm that sweeps across the length of a winding, making contact with the winding at any point along its length. The winding, of course, has to be bare (no insulation) in the area where the arm sweeps.
- An autotransformer is a single, tapped inductor coil used to step up or step down voltage like a transformer, except without providing electrical isolation.
- A *Variac* is a variable autotransformer.

9.6 Voltage regulation

As we saw in a few SPICE analyses earlier in this chapter, the output voltage of a transformer varies some with varying load resistances, even with a constant voltage input. The degree of variance is affected by the primary and secondary winding inductances, among other factors, not the least of which includes winding resistance and the degree of mutual inductance (magnetic coupling) between the primary and secondary windings. For power transformer applications, where the transformer is seen by the load (ideally) as a constant source of voltage, it is good to have the secondary voltage vary as little as possible for wide variances in load current.

The measure of how well a power transformer maintains constant secondary voltage over a range of load currents is called the transformer's *voltage regulation.* It can be calculated from the following formula:

$$\text{Regulation percentage} = \frac{E_{\text{no-load}} - E_{\text{full-load}}}{E_{\text{full-load}}} (100\%)$$

"Full-load" means the point at which the transformer is operating at maximum permissible secondary current. This operating point will be determined primarily by the winding wire size (ampacity) and the method of transformer cooling. Taking our first SPICE transformer simulation as an example, let's compare the output voltage with a 1 kΩ load versus a 200 Ω load (assuming that the 200 Ω load will be our "full load" condition). Recall if you will that our constant primary voltage was 10.00 volts AC:

```
freq          v(3,5)      i(vi1)
6.000E+01     9.962E+00   9.962E-03    Output with 1k ohm load

freq          v(3,5)      i(vi1)
6.000E+01     9.348E+00   4.674E-02    Output with 200 ohm load
```

Notice how the output voltage decreases as the load gets heavier (more current). Now let's take that same transformer circuit and place a load resistance of extremely high magnitude across the secondary winding to simulate a "no-load" condition:

```
transformer
v1 1 0 ac 10 sin
rbogus1 1 2 1e-12
rbogus2 5 0 9e12
l1 2 0 100
l2 3 5 100
k l1 l2 0.999
vi1 3 4 ac 0
rload 4 5 9e12
.ac lin 1 60 60
.print ac v(2,0) i(v1)
.print ac v(3,5) i(vi1)
.end

freq          v(2)        i(v1)
6.000E+01     1.000E+01   2.653E-04

freq          v(3,5)      i(vi1)
6.000E+01     9.990E+00   1.110E-12   Output with (almost) no load
```

So, we see that our output (secondary) voltage spans a range of 9.990 volts at (virtually) no load and 9.348 volts at the point we decided to call "full load." Calculating voltage regulation with these figures, we get:

$$\text{Regulation percentage} = \frac{\text{9.990 V - 9.348 V}}{\text{9.990 V}} \text{ (100\%)}$$

$$\text{Regulation percentage} = 6.4264\ \%$$

Incidentally, this would be considered rather poor (or "loose") regulation for a power transformer. Powering a simple resistive load like this, a good power transformer should exhibit a regulation percentage of less than 3%. Inductive loads tend to create a condition of worse voltage regulation, so this analysis with purely resistive loads was a "best-case" condition.

There are some applications, however, where poor regulation is actually desired. One such case is in discharge lighting, where a step-up transformer is required to initially generate a high voltage (necessary to "ignite" the lamps), then the voltage is expected to drop off once the lamp begins to draw current. This is because discharge lamps' voltage requirements tend to be much lower after a current has been established through the arc path. In this case, a step-up transformer with poor voltage regulation suffices nicely for the task of conditioning power to the lamp.

Another application is in current control for AC arc welders, which are nothing more than step-down transformers supplying low-voltage, high-current power for the welding process. A high voltage is desired to assist in "striking" the arc (getting it started), but like the discharge lamp, an

arc doesn't require as much voltage to sustain itself once the air has been heated to the point of ionization. Thus, a decrease of secondary voltage under high load current would be a good thing. Some arc welder designs provide arc current adjustment by means of a movable iron core in the transformer, cranked in or out of the winding assembly by the operator. Moving the iron slug away from the windings reduces the strength of magnetic coupling between the windings, which diminishes no-load secondary voltage *and* makes for poorer voltage regulation.

No exposition on transformer regulation could be called complete without mention of an unusual device called a *ferroresonant transformer*. "Ferroresonance" is a phenomenon associated with the behavior of iron cores while operating near a point of magnetic saturation (where the core is so strongly magnetized that further increases in winding current results in little or no increase in magnetic flux).

While being somewhat difficult to describe without going deep into electromagnetic theory, the ferroresonant transformer is a power transformer engineered to operate in a condition of persistent core saturation. That is, its iron core is "stuffed full" of magnetic lines of flux for a large portion of the AC cycle so that variations in supply voltage (primary winding current) have little effect on the magnetic field strength in the core, which means the secondary winding outputs a nearly constant voltage despite significant variations in supply (primary winding) voltage. Normally, core saturation in a transformer results in distortion of the sinewave shape, and the ferroresonant transformer is no exception. To combat this side effect, ferroresonant transformers have an auxiliary secondary winding paralleled with one or more capacitors, forming a resonant circuit tuned to the power supply frequency. This "tank circuit" serves as a filter to reject harmonics created by the core saturation, and provides the added benefit of storing energy in the form of AC oscillations, which is available for sustaining output winding voltage for brief periods of input voltage loss (milliseconds' worth of time, but certainly better than nothing).

Ferroresonant transformer

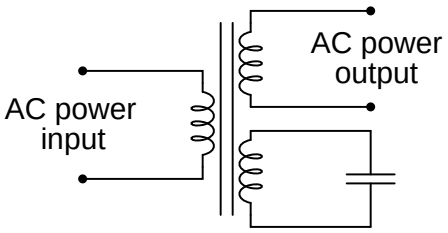

In addition to blocking harmonics created by the saturated core, this resonant circuit also "filters out" harmonic frequencies generated by nonlinear (switching) loads in the secondary winding circuit and any harmonics present in the source voltage, providing "clean" power to the load.

Ferroresonant transformers offer several features useful in AC power conditioning: constant output voltage given substantial variations in input voltage, harmonic filtering between the power source and the load, and the ability to "ride through" brief losses in power by keeping a reserve of energy in its resonant tank circuit. These transformers are also highly tolerant of excessive loading and transient (momentary) voltage surges. They are so tolerant, in fact, that some may be briefly paralleled with unsynchronized AC power sources, allowing a load to be switched from one source of power to another in a "make-before-break" fashion with no interruption of power on the secondary side!

Unfortunately, these devices have equally noteworthy disadvantages: they waste a lot of energy (due to hysteresis losses in the saturated core), generating *significant* heat in the process, and are intolerant of frequency variations, which means they don't work very well when powered by small engine-driven generators having poor speed regulation. Voltages produced in the resonant winding/capacitor circuit tend to be very high, necessitating expensive capacitors and presenting the service technician with very dangerous working voltages. Some applications, though, may prioritize the ferroresonant transformer's advantages over its disadvantages. Semiconductor circuits exist to "condition" AC power as an alternative to ferroresonant devices, but none can compete with this transformer in terms of sheer simplicity.

- **REVIEW:**
- *Voltage regulation* is the measure of how well a power transformer can maintain constant secondary voltage given a constant primary voltage and wide variance in load current. The lower the percentage (closer to zero), the more stable the secondary voltage and the better the regulation it will provide.
- A *ferroresonant* transformer is a special transformer designed to regulate voltage at a stable level despite wide variation in input voltage.

9.7 Special transformers and applications

Because transformers can step voltage and current to different levels, and because power is transferred equivalently between primary and secondary windings, they can be used to "convert" the impedance of a load to a different level. That last phrase deserves some explanation, so let's investigate what it means.

The purpose of a load (usually) is to do something productive with the power it dissipates. In the case of a resistive heating element, the practical purpose for the power dissipated is to heat something up. Loads are engineered to safely dissipate a certain maximum amount of power, but two loads of equal power rating are not necessarily identical. Consider these two 1000 watt resistive heating elements:

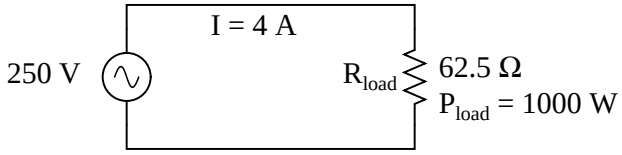

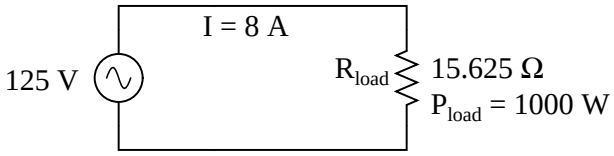

Both heaters dissipate exactly 1000 watts of power, but they do so at different voltage and current levels (either 250 volts and 4 amps, or 125 volts and 8 amps). Using Ohm's Law to determine the

necessary resistance of these heating elements (R=E/I), we arrive at figures of 62.5 Ω and 15.625 Ω, respectively. If these are AC loads, we might refer to their opposition to current in terms of impedance rather than plain resistance, although in this case that's all they're composed of (no reactance). The 250 volt heater would be said to be a higher impedance load than the 125 volt heater.

If we desired to operate the 250 volt heater element directly on a 125 volt power system, we would end up being disappointed. With 62.5 Ω of impedance (resistance), the current would only be 2 amps (I=E/R; 125/62.5), and the power dissipation would only be 250 watts (P=IE; 125 x 2), or one-quarter of its rated power. The impedance of the heater and the voltage of our source would be mismatched, and we couldn't obtain the full rated power dissipation from the heater.

All hope is not lost, though. With a step-up transformer, we could operate the 250 volt heater element on the 125 volt power system like this:

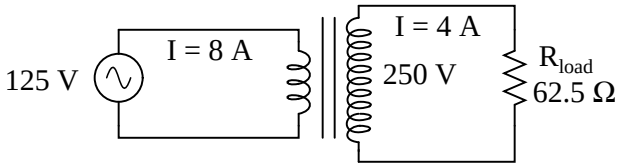

1000 watts dissipation at the load resistor !

The ratio of the transformer's windings provides the voltage step-up *and* current step-down we need for the otherwise mismatched load to operate properly on this system. Take a close look at the primary circuit figures: 125 volts at 8 amps. As far as the power supply "knows," it's powering a 15.625 Ω (R=E/I) load at 125 volts, not a 62.5 Ω load! The voltage and current figures for the primary winding are indicative of 15.625 Ω load impedance, not the actual 62.5 Ω of the load itself. In other words, not only has our step-up transformer transformed voltage and current, but it has transformed *impedance* as well.

The transformation ratio of impedance is the square of the voltage/current transformation ratio, the same as the winding inductance ratio:

$$\text{Voltage transformation ratio} = \frac{N_{secondary}}{N_{primary}}$$

$$\text{Current transformation ratio} = \frac{N_{primary}}{N_{secondary}}$$

$$\text{Impedance transformation ratio} = \left(\frac{N_{secondary}}{N_{primary}} \right)^2$$

$$\text{Inductance ratio} = \left(\frac{N_{secondary}}{N_{primary}} \right)^2$$

Where,

N = number of turns in winding

This concurs with our example of the 2:1 step-up transformer and the impedance ratio of 62.5 Ω to 15.625 Ω (a 4:1 ratio, which is 2:1 squared). Impedance transformation is a highly useful ability of transformers, for it allows a load to dissipate its full rated power even if the power system is not at the proper voltage to directly do so.

Recall from our study of network analysis the *Maximum Power Transfer Theorem*, which states that the maximum amount of power will be dissipated by a load resistance when that load resistance is equal to the Thevenin/Norton resistance of the network supplying the power. Substitute the word "impedance" for "resistance" in that definition and you have the AC version of that Theorem. If we're trying to obtain theoretical maximum power dissipation from a load, we must be able to properly match the load impedance and source (Thevenin/Norton) impedance together. This is generally more of a concern in specialized electric circuits such as radio transmitter/antenna and audio amplifier/speaker systems. Let's take an audio amplifier system and see how it works:

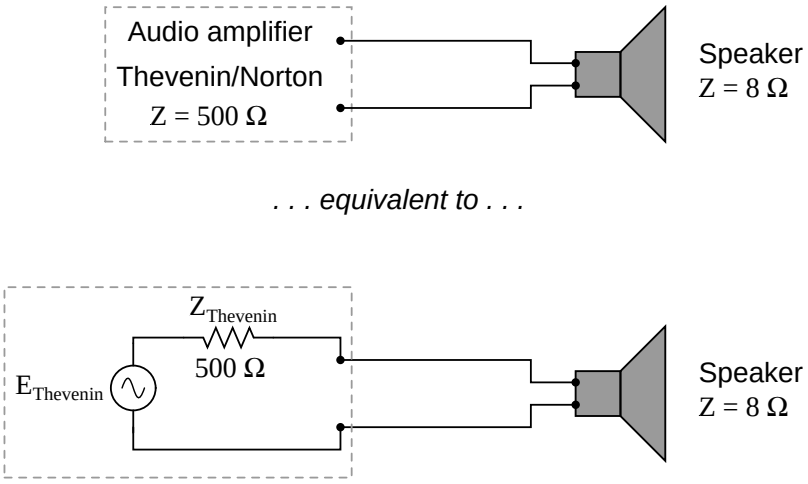

With an internal impedance of 500 Ω, the amplifier can only deliver full power to a load (speaker) also having 500 Ω of impedance. Such a load would drop higher voltage and draw less current than an 8 Ω speaker dissipating the same amount of power. If an 8 Ω speaker were connected directly to the 500 Ω amplifier as shown, the *impedance mismatch* would result in very poor (low peak power) performance. Additionally, the amplifier would tend to dissipate more than its fair share of power in the form of heat trying to drive the low impedance speaker.

To make this system work better, we can use a transformer to match these mismatched impedances. Since we're going from a high impedance (high voltage, low current) supply to a low impedance (low voltage, high current) load, we'll need to use a step-down transformer:

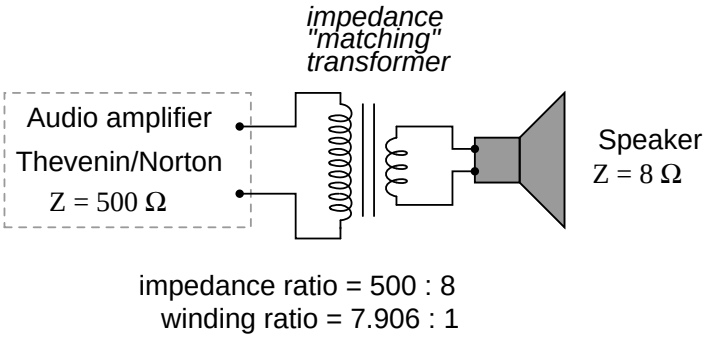

To obtain an impedance transformation ratio of 500:8, we would need a winding ratio equal to the square root of 500:8 (the square root of 62.5:1, or 7.906:1). With such a transformer in place, the speaker will load the amplifier to just the right degree, drawing power at the correct voltage and current levels to satisfy the Maximum Power Transfer Theorem and make for the most efficient power delivery to the load. The use of a transformer in this capacity is called *impedance matching.*

Anyone who has ridden a multi-speed bicycle can intuitively understand the principle of impedance matching. A human's legs will produce maximum power when spinning the bicycle crank at a particular speed (about 60 to 90 revolution per minute). Above or below that rotational speed, human leg muscles are less efficient at generating power. The purpose of the bicycle's "gears" is to impedance-match the rider's legs to the riding conditions so that they always spin the crank at the optimum

speed.

If the rider attempts to start moving while the bicycle is shifted into its "top" gear, he or she will find it very difficult to get moving. Is it because the rider is weak? No, it's because the high step-up ratio of the bicycle's chain and sprockets in that top gear presents a mismatch between the conditions (lots of inertia to overcome) and their legs (needing to spin at 60-90 RPM for maximum power output). On the other hand, selecting a gear that is too low will enable the rider to get moving immediately, but limit the top speed they will be able to attain. Again, is the lack of speed an indication of weakness in the bicyclist's legs? No, it's because the lower speed ratio of the selected gear creates another type of mismatch between the conditions (low load) and the rider's legs (losing power if spinning faster than 90 RPM). It is much the same with electric power sources and loads: there must be an impedance match for maximum system efficiency. In AC circuits, transformers perform the same matching function as the sprockets and chain ("gears") on a bicycle to match otherwise mismatched sources and loads.

Impedance matching transformers are not fundamentally different from any other type of transformer in construction or appearance. A small impedance-matching transformer for audio-frequency applications is shown on the right in the following photograph:

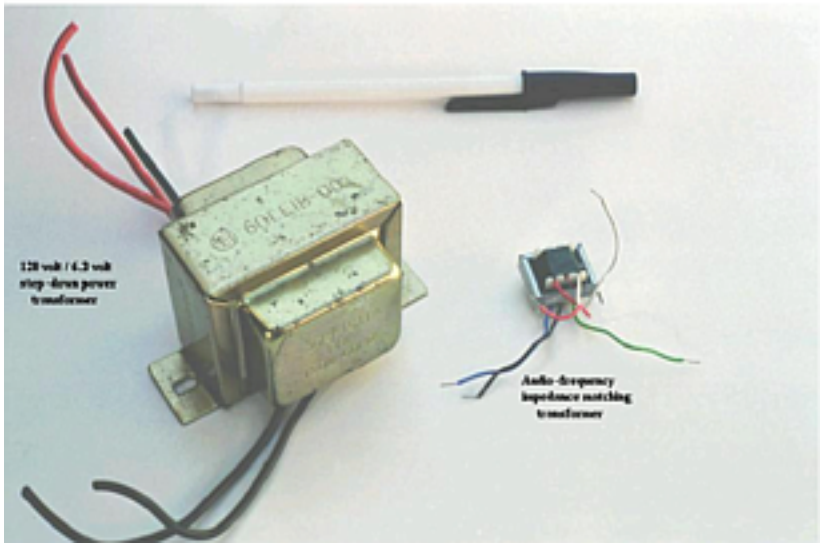

Another impedance-matching transformer can be seen on this printed circuit board, in the upper right corner, to the immediate left of resistors R_2 and R_1. It is labeled "T_1":

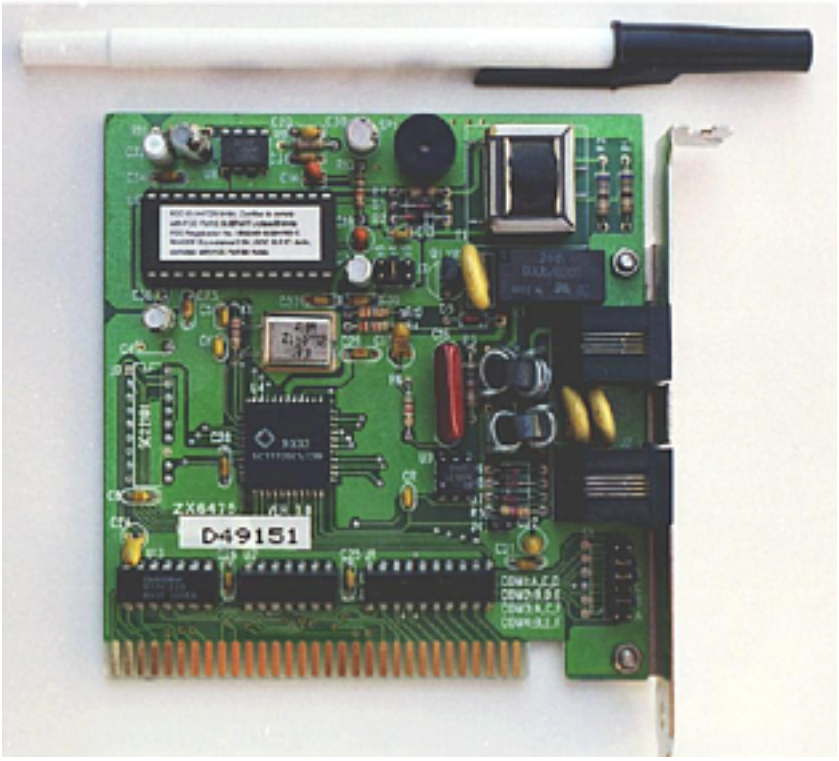

Transformers can also be used in electrical instrumentation systems. Due to transformers' ability to step up or step down voltage and current, and the electrical isolation they provide, they can serve as a way of connecting electrical instrumentation to high-voltage, high current power systems. Suppose we wanted to accurately measure the voltage of a 13.8 kV power system (a very common high voltage standard in industry):

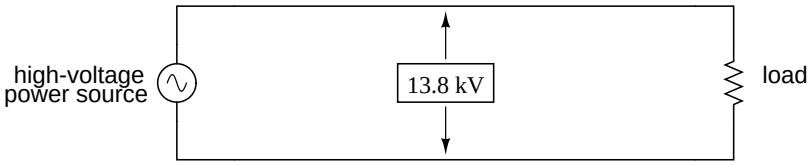

Designing, installing, and maintaining a voltmeter capable of directly measuring 13,800 volts AC would be no easy task. The safety hazard alone of bringing 13.8 kV conductors into the back of an instrument panel would be severe. However, by using a precision step-down transformer, we can reduce the 13.8 kV down to a safe level of voltage at a constant ratio, and isolate it from the instrument connections, adding an additional level of safety to the metering system:

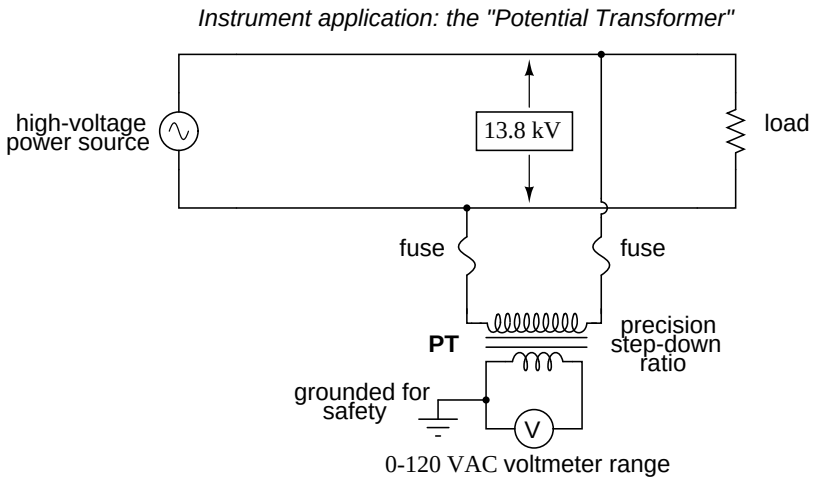

Now the voltmeter reads a precise fraction, or ratio, of the actual system voltage, its scale set to read as though it were measuring the voltage directly. The transformer keeps the instrument voltage at a safe level and electrically isolates it from the power system, so there is no direct connection between the power lines and the instrument or instrument wiring. When used in this capacity, the transformer is called a *Potential Transformer*, or simply *PT*.

Potential transformers are designed to provide as accurate a voltage step-down ratio as possible. To aid in precise voltage regulation, loading is kept to a minimum: the voltmeter is made to have high input impedance so as to draw as little current from the PT as possible. As you can see, a fuse has been connected in series with the PTs primary winding, for safety and ease of disconnecting the PT from the circuit.

A standard secondary voltage for a PT is 120 volts AC, for full-rated power line voltage. The standard voltmeter range to accompany a PT is 150 volts, full-scale. PTs with custom winding ratios can be manufactured to suit any application. This lends itself well to industry standardization of the actual voltmeter instruments themselves, since the PT will be sized to step the system voltage down to this standard instrument level.

Following the same line of thinking, we can use a transformer to step down current through a power line so that we are able to safely and easily measure high system currents with inexpensive ammeters. Of course, such a transformer would be connected in series with the power line, like this:

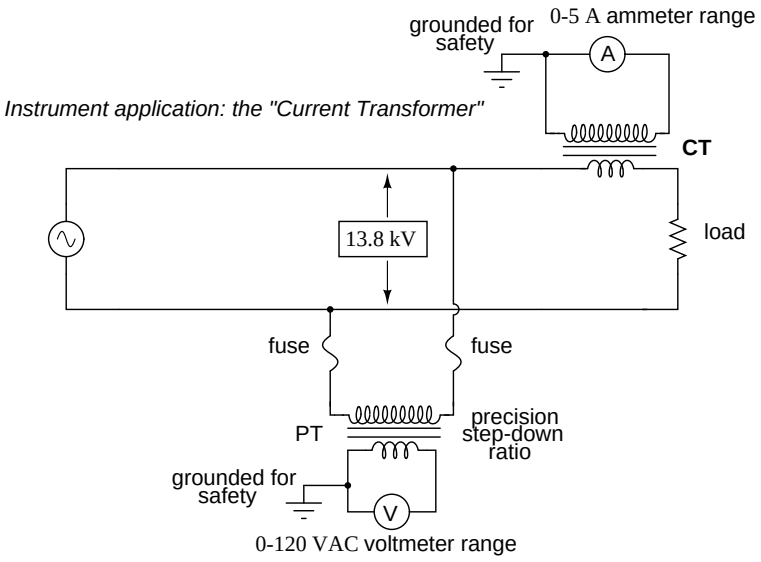

Note that while the PT is a step-down device, the *Current Transformer* (or *CT*) is a step-up device (with respect to voltage), which is what is needed to step *down* the power line current. Quite often, CTs are built as donut-shaped devices through which the power line conductor is run, the power line itself acting as a single-turn primary winding. CTs like this can be made to hinge open, allowing insertion around a power conductor without disturbing the conductor at all. The industry standard secondary current for a CT is a range of 0 to 5 amps AC. Like PTs, CTs can be made with custom winding ratios to fit almost any application. Because their "full load" secondary current is 5 amps, CT ratios are usually described in terms of full-load primary amps to 5 amps, like this:

600 : 5 ratio *(for measuring up to 600 A line current)*

100 : 5 ratio *(for measuring up to 100 A line current)*

1k : 5 ratio *(for measuring up to 1000 A line current)*

Because CTs are designed to be powering ammeters, which are low-impedance loads, and they are wound as voltage step-up transformers, they should never, *ever* be operated with an open-circuited secondary winding. Failure to heed this warning will result in the CT producing extremely high secondary voltages, dangerous to equipment and personnel alike. To facilitate maintenance of ammeter instrumentation, short-circuiting switches are often installed in parallel with the CT's secondary winding, to be closed whenever the ammeter is removed for service:

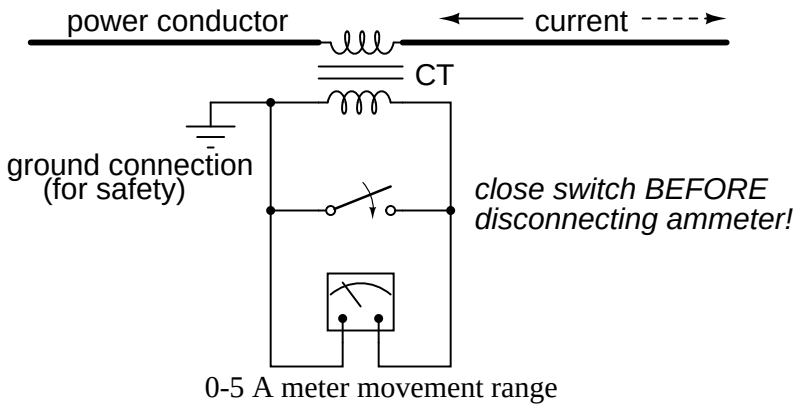

Though it may seem strange to *intentionally* short-circuit a power system component, it is perfectly proper and quite necessary when working with current transformers.

Another kind of special transformer, seen often in radio-frequency circuits, is the *air core* transformer. True to its name, an air core transformer has its windings wrapped around a nonmagnetic form, usually a hollow tube of some material. The degree of coupling (mutual inductance) between windings in such a transformer is many times less than that of an equivalent iron-core transformer, but the undesirable characteristics of a ferromagnetic core (eddy current losses, hysteresis, saturation, etc.) are completely eliminated. It is in high-frequency applications that these effects of iron cores are most problematic.

One notable example of air-core transformer is the *Tesla Coil*, named after the Serbian electrical genius Nikola Tesla, who was also the inventor of the rotating magnetic field AC motor, polyphase AC power systems, and many elements of radio technology. The Tesla Coil is a resonant, high-frequency step-up transformer used to produce high voltages that are relatively harmless to human beings (the "skin effect" of high-frequency alternating current precluding electric shock, although capable of producing skin burns). One of Tesla's dreams was to employ his coil technology to distribute electric power without the need for wires, simply broadcasting it in the form of radio waves which could be received and conducted to loads by means of antennas. The basic schematic for a Tesla Coil looks like this:

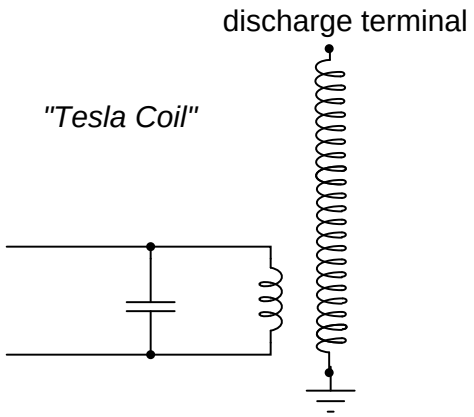

The capacitor in parallel with the transformer's primary winding forms the tank circuit needed

for resonance. The secondary winding is wound in close proximity to the primary, usually around the same nonmagnetic form. Several options exist for "exciting" the primary circuit, the simplest being a high-voltage, low-frequency AC source and spark gap:

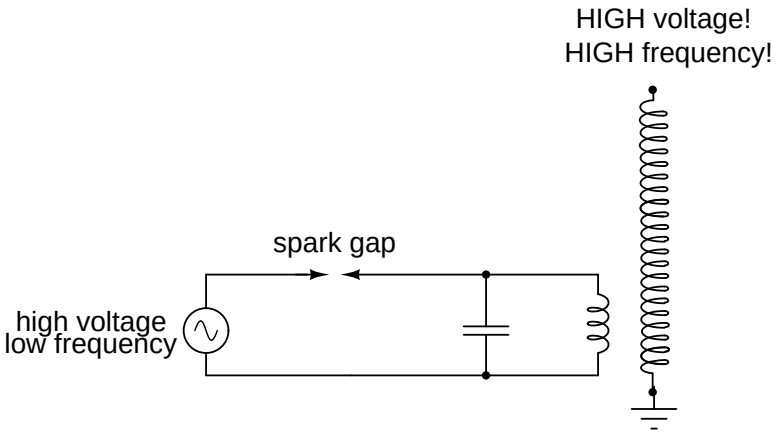

With each cycle peak of the high-voltage AC source, the current will jump across the spark gap, briefly energizing the tank circuit. The tank circuit, tuned for a resonant frequency far in excess of the AC source, will oscillate for many cycles before the next cycle peak of the source, when it will receive another "kick" to keep the oscillations going. The secondary of the Tesla Coil will output a fairly constant high voltage at very high frequencies, usually producing a spark discharge into the surrounding air at the discharge terminal.

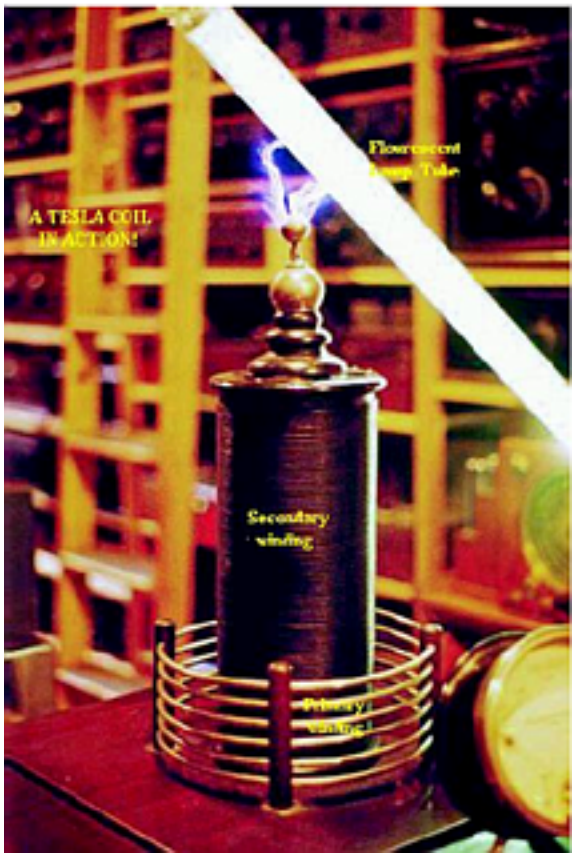

Tesla Coils find application primarily as novelty devices, showing up in high school science fairs, basement workshops, and the occasional low budget science-fiction movie.

So far, we've explored the transformer as a device for converting different levels of voltage, current, and even impedance from one circuit to another. Now we'll take a look at it as a completely different kind of device: one that allows a small electrical signal to exert *control* over a much larger quantity of electrical power. In this mode, a transformer acts as an *amplifier*.

The device I'm referring to is called a *saturable-core reactor*, or simply *saturable reactor*. Actually, it is not really a transformer at all, but rather a special kind of inductor whose inductance can be varied by the application of a DC current through a second winding wound around the same iron core. Like the ferroresonant transformer, the saturable reactor relies on the principle of magnetic saturation. When a material such as iron is completely saturated (that is, all its magnetic domains are lined up with the applied magnetizing force), additional increases in current through the magnetizing winding will not result in further increases of magnetic flux.

Now, inductance is the measure of how well an inductor opposes changes in current by developing a voltage in an opposing direction. The ability of an inductor to generate this opposing voltage is directly connected with the change in magnetic flux inside the inductor resulting from the change in current, and the number of winding turns in the inductor. If an inductor has a saturated core, no further magnetic flux will result from further increases in current, and so there will be no voltage induced in opposition to the change in current. In other words, an inductor loses its inductance

(ability to oppose changes in current) when its core becomes magnetically saturated.

If an inductor's inductance changes, then its reactance (and impedance) to AC current changes as well. In a circuit with a constant voltage source, this will result in a change in current:

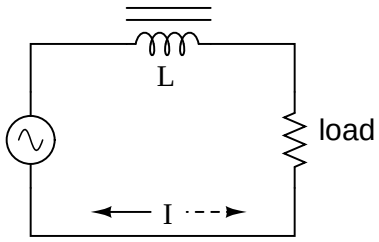

If L changes in inductance, Z_L will correspondingly change, thus changing the circuit current.

A saturable reactor capitalizes on this effect by forcing the ferromagnetic core into a state of saturation with a strong magnetic field generated by current through another winding. The reactor's "power" winding is the one carrying the AC load current, and the "control" winding is one carrying a DC current strong enough to drive the core into saturation:

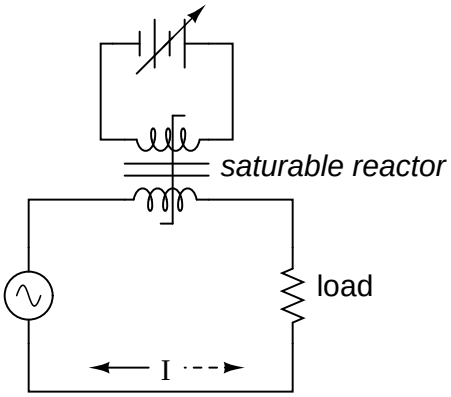

The strange-looking transformer symbol shown in the above schematic represents a saturable-core reactor, the upper winding being the DC control winding and the lower being the "power" winding through which the controlled AC current goes. Increased DC control current produces more magnetic flux in the reactor core, driving it closer to a condition of saturation, thus decreasing the power winding's inductance, decreasing its impedance, and increasing current to the load. Thus, the DC control current is able to exert *control* over the AC current delivered to the load.

The circuit shown would work, but it would not work very well. The first problem is the natural transformer action of the saturable reactor: AC current through the power winding will try to induce current in the control winding, which may cause trouble in the DC power source. Also, saturable reactors tend to regulate AC power only in one direction: in one half of the AC cycle, the magnetic field forces from both windings add; in the other half, they subtract. Thus, the core will tend to be more saturated in one half of the AC cycle than the other, passing current more easily in one

direction than the other. Fortunately, both problems can be overcome with a little ingenuity:

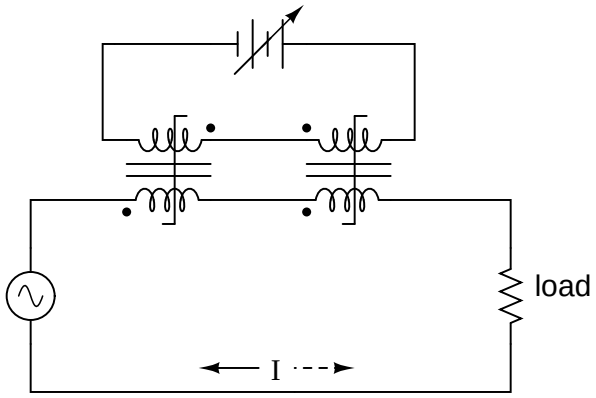

Notice the placement of the phasing dots on the two reactors: the power windings are "in phase" while the control windings are "out of phase." If both reactors are identical, any voltage induced in the control windings by load current through the power windings will cancel out to zero at the battery terminals, thus eliminating the first problem mentioned. Furthermore, since the DC control current through both reactors produces magnetic fields in different directions through the reactor cores, one reactor will saturate more in one cycle of the AC power while the other reactor will saturate more in the other, thus equalizing the control action through each half-cycle so that the AC power is "throttled" symmetrically. This phasing of control windings can be accomplished with two separate reactors as shown, or in a single reactor design with intelligent layout of the windings and core.

Saturable reactor technology has even been miniaturized to the circuit-board level in compact packages more generally known as *magnetic amplifiers*. I personally find this to be fascinating: the effect of amplification (one electrical signal controlling another), normally requiring the use of physically fragile vacuum tubes or electrically "fragile" semiconductor devices, can be realized in a device both physically and electrically rugged. Magnetic amplifiers do have disadvantages over their more fragile counterparts, namely size, weight, nonlinearity, and bandwidth (frequency response), but their utter simplicity still commands a certain degree of appreciation, if not practical application.

Saturable-core reactors are less commonly known as "saturable-core inductors" or *transductors*.

- **REVIEW:**
- Transformers can be used to transform impedance as well as voltage and current. When this is done to improve power transfer to a load, it is called *impedance matching*.
- A *Potential Transformer* (PT) is a special instrument transformer designed to provide a precise voltage step-down ratio for voltmeters measuring high power system voltages.
- A *Current Transformer* (CT) is another special instrument transformer designed to step down the current through a power line to a safe level for an ammeter to measure.
- An *air-core* transformer is one lacking a ferromagnetic core.
- A *Tesla Coil* is a resonant, air-core, step-up transformer designed to produce very high AC voltages at high frequency.

- A *saturable reactor* is a special type of inductor, the inductance of which can be controlled by the DC current through a second winding around the same core. With enough DC current, the magnetic core can be saturated, decreasing the inductance of the power winding in a controlled fashion.

9.8 Practical considerations

As has already been observed, transformers must be designed for specific purposes in order to achieve good power coupling and required voltage regulation. There is no "one size fits all" transformer design, and never will be. In addition to winding inductance and magnetic coupling parameters, a real transformer must be designed to carry the expected values of current without any trouble. This means the winding conductors must be made of the proper gage wire to avoid any heating problems. Here is yet another design parameter that makes a "one size fits all" ideal transformer impossible to construct.

Additionally, winding conductor insulation is a concern where high voltages are encountered, as they often are in step-up and step-down power distribution transformers. Not only do the windings have to be well insulated from the iron core, but each winding has to be sufficiently insulated from the other in order to maintain electrical isolation between windings.

Beyond the concern of winding conductor ampacity and insulation voltage ratings, we have the magnetic flux limitations of the core. For ferromagnetic core transformers, we must be mindful of the saturation limits of the core. Remember that ferromagnetic materials cannot support infinite magnetic flux densities: they tend to "saturate" at a certain level (dictated by the material and core dimensions), meaning that further increases in magnetic field force do not result in proportional increases in magnetic field flux. Normally, transformer designers rate the cores conservatively so as to avoid approaching these limits.

If a transformer's primary winding is overloaded (too much current), there may be excessive levels of magnetic field force imposed on the core at peak moments of the AC sinewave cycle, driving it to saturation. When this happens, the voltage induced in the secondary winding will no longer match the wave-shape as the voltage powering the primary coil. In other words, the overloaded transformer will *distort* the waveshape from primary to secondary windings, creating harmonics in the secondary winding's output. As we discussed before, harmonic content in AC power systems typically causes problems.

Respecting these limitations, transformers are rated for certain levels of primary and secondary winding voltage and current, though the current rating is usually derived from a volt-amp (VA) rating assigned to the transformer. For example, take a step-down transformer with a primary voltage rating of 120 volts, a secondary voltage rating of 48 volts, and a VA rating of 1 kVA (1000 VA). The maximum winding currents can be determined as such:

$$\frac{1000 \text{ VA}}{120 \text{ V}} = 8.333 \text{ A} \quad \textit{(maximum primary winding current)}$$

$$\frac{1000 \text{ VA}}{48 \text{ V}} = 20.833 \text{ A} \quad \textit{(maximum secondary winding current)}$$

Sometimes windings will bear current ratings in amps, but this is typically seen on small transformers. Large transformers are almost always rated in terms of winding voltage and VA or kVA.

When transformers transfer power, they do so with a minimum of loss. As it was stated earlier, modern power transformer designs typically exceed 95% efficiency. It is good to know where some of this lost power goes, however, and what causes it to be lost.

There is, of course, power lost due to resistance of the wire windings. Unless superconducting wires are used, there will always be power dissipated in the form of heat through the resistance of current-carrying conductors. Because transformers require such long lengths of wire, this loss can be a significant factor. Increasing the gage of the winding wire is one way to minimize this loss, but only with substantial increases in cost, size, and weight.

Resistive losses aside, the bulk of transformer power loss is due to magnetic effects in the core. Perhaps the most significant of these "core losses" is *eddy-current loss*, which is resistive power dissipation due to the passage of induced currents through the iron of the core. Because iron is a conductor of electricity as well as being an excellent "conductor" of magnetic flux, there will be currents induced in the iron just as there are currents induced in the secondary windings from the alternating magnetic field. These induced currents – following the perpendicularity clause of *Faraday's Law of Electromagnetic Induction* – tend to circulate through the cross-section of the core perpendicularly to the primary winding turns. Their circular motion gives them their unusual name: like eddies in a stream of water that circulate rather than move in straight lines.

Iron is a fair conductor of electricity, but not as good as the copper or aluminum from which wire windings are typically made. Consequently, these "eddy currents" must overcome significant electrical resistance as they circulate through the core. In overcoming the resistance offered by the iron, they dissipate power in the form of heat. Hence, we have a source of inefficiency in the transformer that is difficult to eliminate. The main strategy in mitigating these wasteful eddy currents is to form the iron core in many thin sheets, each sheet covered with an insulating varnish so that the core is divided up into skinny slices. The result is very little width in the core for eddy currents to circulate in:

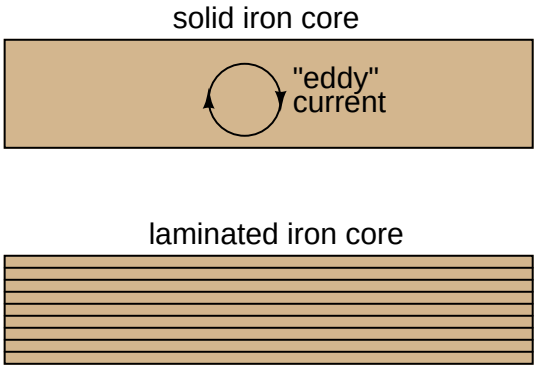

Laminated cores like the one shown here are standard in almost all low-frequency transformers. Another, similar technique for minimizing eddy current losses which works better for high-frequency applications is to make the core out of iron powder instead of thin iron sheets. Like the lamination sheets, these granules of iron are individually coated in an electrically insulating material, which makes the core nonconductive except for within the width of each granule. Powdered iron cores are often found in transformers handling radio-frequency currents.

Another "core loss" is that of magnetic *hysteresis*. All ferromagnetic materials tend to retain some degree of magnetization after exposure to an external magnetic field. This tendency to stay

magnetized is called "hysteresis," and it takes a certain investment in energy to overcome this opposition to change every time the magnetic field produced by the primary winding changes polarity (twice per AC cycle). This type of loss can be mitigated through good core material selection, choosing a core alloy with low hysteresis.

Transformer energy losses tend to get worse with increasing frequency. The skin effect within winding conductors reduces the available cross-sectional area for electron flow, thereby increasing effective resistance as the frequency goes up and creating more power lost through resistive dissipation. Magnetic core losses are also exaggerated with higher frequencies, eddy currents and hysteresis effects becoming more severe. For this reason, transformers of significant size are designed to operate efficiently in a limited range of frequencies. In most power distribution systems where the line frequency is very stable, one would think excessive frequency would never pose a problem. Unfortunately it does, in the form of harmonics created by nonlinear loads.

As we've seen in earlier chapters, nonsinusoidal waveforms are equivalent to additive series of multiple sinusoidal waveforms at different amplitudes and frequencies. In power systems, these other frequencies are whole-number multiples of the fundamental (line) frequency, meaning that they will always be higher, not lower, than the design frequency of the transformer. In significant measure, they can cause severe transformer overheating. Power transformers can be engineered to handle certain levels of power system harmonics, and this capability is sometimes denoted with a "K factor" rating.

Aside from power ratings and power losses, transformers often harbor other undesirable limitations which circuit designers must be made aware of. Like their simpler counterparts – inductors – transformers exhibit capacitance due to the insulation dielectric between conductors: from winding to winding, turn to turn (in a single winding), and winding to core. Usually this capacitance is of no concern in a power application, but small signal applications (especially those of high frequency) may not tolerate this quirk well. Also, the effect of having capacitance along with the windings' designed inductance gives transformers the ability to *resonate* at a particular frequency, definitely a design concern in signal applications where the applied frequency may reach this point (usually the resonant frequency of a power transformer is well beyond the frequency of the AC power it was designed to operate on).

Flux containment (making sure a transformer's magnetic flux doesn't escape so as to interfere with another device, and making sure other devices' magnetic flux is shielded from the transformer core) is another concern shared both by inductors and transformers.

Transformers do have some unique concerns, though, due to the priority of mutual inductance between primary and secondary windings. In many applications it is desirable to have 100% coupling between windings, so that the transformer is able to cleanly transfer power between windings without acting like an inductor. However, any magnetic flux not coupled between windings in a transformer is free to simply store and release energy (rather than transfer it from one coil to another). Any energy thusly stored and released by this uncoupled flux manifests itself as an inductance in series with the producing winding. This stray inductance is called *leakage inductance*.

Leakage inductance has a detrimental effect on voltage regulation. Because leakage inductance is equivalent to an inductance connected in series with the transformer's winding, it manifests itself as a series impedance with the load. Thus, the more current drawn by the load, the less voltage available at the secondary winding terminals. Usually, good voltage regulation is desired in transformer design, but there are exceptional applications. As was stated before, discharge lighting circuits require a step-up transformer with "loose" (poor) voltage regulation to ensure reduced voltage after the establishment of an arc through the lamp. One way to meet this design criterion is to engineer

the transformer with flux leakage paths for magnetic flux to bypass the secondary winding(s). The resulting leakage flux will produce leakage inductance, which will in turn produce the poor regulation needed for discharge lighting.

- **REVIEW:**
- Power transformers are limited in the amount of power they can transfer from primary to secondary winding(s). Large units are typically rated in VA (volt-amps) or kVA (kilo volt-amps).
- Resistance in transformer windings contributes to inefficiency, as current will dissipate heat, wasting energy.
- Magnetic effects in a transformer's iron core also contribute to inefficiency. Among the effects are *eddy currents* (circulating induction currents in the iron core) and *hysteresis* (power lost due to overcoming the tendency of iron to magnetize in a particular direction).
- Increased frequency results in increased power losses within a power transformer. The presence of harmonics in a power system is a source of frequencies significantly higher than normal, which may cause overheating in large transformers.
- Both transformers and inductors harbor certain unavoidable amounts of capacitance due to wire insulation (dielectric) separating winding turns from the iron core and from each other. This capacitance can be significant enough to give the transformer a natural *resonant frequency*, which can be problematic in signal applications.
- *Leakage inductance* is caused by magnetic flux not being 100% coupled between windings in a transformer. Any flux not involved with *transferring* energy from one winding to another will store and release energy, which is how (self-) inductance works. Leakage inductance tends to worsen a transformer's voltage regulation.

Chapter 10

POLYPHASE AC CIRCUITS

10.1 Single-phase power systems

Depicted above is a very simple AC circuit. If the load resistor's power dissipation were substantial, we might call this a "power circuit" or "power system" instead of regarding it as just a regular circuit. The distinction between a "power circuit" and a "regular circuit" may seem arbitrary, but the practical concerns are definitely not.

One such concern is the size and cost of wiring necessary to deliver power from the AC source to the load. Normally, we do not give much thought to this type of concern if we're merely analyzing a circuit for the sake of learning about the laws of electricity. However, in the real world it can be a major concern. If we give the source in the above circuit a voltage value and also give power dissipation values to the two load resistors, we can determine the wiring needs for this particular circuit:

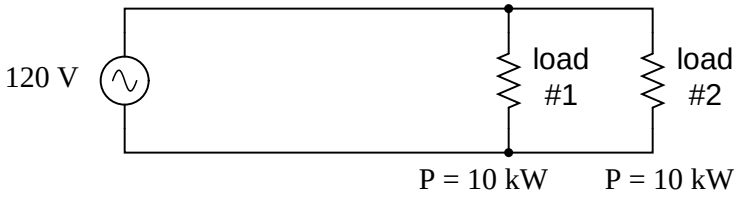

$$I = \frac{P}{E}$$

$$I = \frac{10\ kW}{120\ V}$$

$I = 83.33\ A$ *(for each load resistor)*

$I_{total} = I_{load\#1} + I_{load\#2}$ $\qquad$ $P_{total} = (10\ kW) + (10\ kW)$

$I_{total} = (83.33\ A) + (83.33\ A)$ $\qquad$ $P_{total} = 20\ kW$

$I_{total} = 166.67\ A$

83.33 amps for each load resistor adds up to 166.66 amps total circuit current. This is no small amount of current, and would necessitate copper wire conductors of at least 1/0 gage. Such wire is well over 1/4 inch in diameter, weighing over 300 pounds per thousand feet. Bear in mind that copper is not cheap either! It would be in our best interest to find ways to minimize such costs if we were designing a power system with long conductor lengths.

One way to do this would be to increase the voltage of the power source and use loads built to dissipate 10 kW each at this higher voltage. The loads, of course, would have to have greater resistance values to dissipate the same power as before (10 kW each) at a greater voltage than before. The advantage would be less current required, permitting the use of smaller, lighter, and cheaper wire:

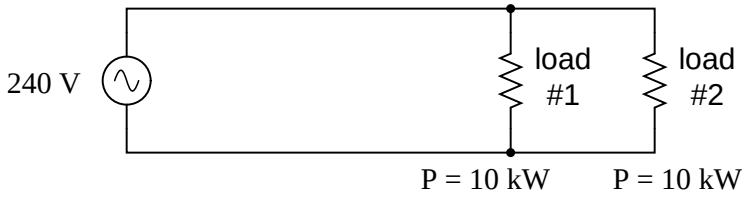

$$I = \frac{P}{E}$$

$$I = \frac{10\ \text{kW}}{240\ \text{V}}$$

$I = 41.67$ A *(for each load resistor)*

$I_{total} = I_{load\#1} + I_{load\#2}$ $P_{total} = (10\ \text{kW}) + (10\ \text{kW})$

$I_{total} = (41.67\ \text{A}) + (41.67\ \text{A})$ $P_{total} = 20$ kW

$I_{total} = 83.33$ A

Now our *total* circuit current is 83.33 amps, half of what it was before. We can now use number 4 gage wire, which weighs less than half of what 1/0 gage wire does per unit length. This is a considerable reduction in system cost with no degradation in performance. This is why power distribution companies elect to transmit electric power using very high voltages (many thousands of volts): to capitalize on the savings realized by the use of smaller, lighter, cheaper wire.

However, this solution is not without disadvantages. Another practical concern with power circuits is the danger of electric shock from high voltages. Again, this is not usually the sort of thing we concentrate on while learning about the laws of electricity, but it is a very valid concern in the real world, especially when large amounts of power are being dealt with. The gain in efficiency realized by stepping up the circuit voltage presents us with increased danger of electric shock. Power distribution companies tackle this problem by stringing their power lines along high poles or towers, and insulating the lines from the supporting structures with large, porcelain insulators.

At the point of use (the electric power customer), there is still the issue of what voltage to use for powering loads. High voltage gives greater system efficiency by means of reduced conductor current, but it might not always be practical to keep power wiring out of reach at the point of use the way it can be elevated out of reach in distribution systems. This tradeoff between efficiency and danger is one that European power system designers have decided to risk, all their households and appliances operating at a nominal voltage of 240 volts instead of 120 volts as it is in North America. That is why tourists from America visiting Europe must carry small step-down transformers for their portable appliances, to step the 240 VAC (volts AC) power down to a more suitable 120 VAC.

Is there any way to realize the advantages of both increased efficiency and reduced safety hazard at the same time? One solution would be to install step-down transformers at the end-point of power use, just as the American tourist must do while in Europe. However, this would be expensive and inconvenient for anything but very small loads (where the transformers can be built cheaply) or very large loads (where the expense of thick copper wires would exceed the expense of a transformer).

An alternative solution would be to use a higher voltage supply to provide power to two lower voltage loads in series. This approach combines the efficiency of a high-voltage system with the safety of a low-voltage system:

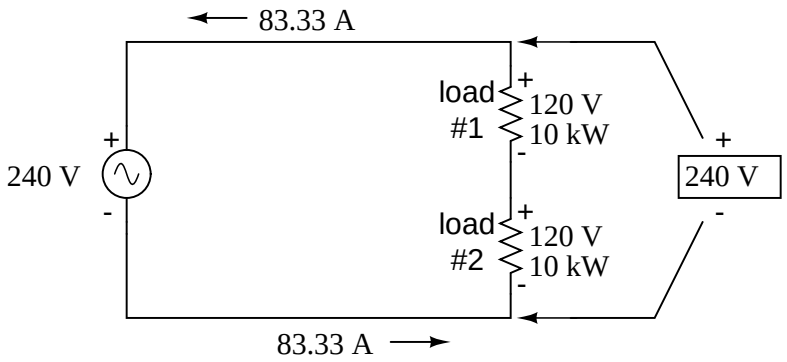

Notice the polarity markings (+ and -) for each voltage shown, as well as the unidirectional arrows for current. For the most part, I've avoided labeling "polarities" in the AC circuits we've been analyzing, even though the notation is valid to provide a frame of reference for phase. In later sections of this chapter, phase relationships will become very important, so I'm introducing this notation early on in the chapter for your familiarity.

The current through each load is the same as it was in the simple 120 volt circuit, but the currents are not additive because the loads are in series rather than parallel. The voltage across each load is only 120 volts, not 240, so the safety factor is better. Mind you, we still have a full 240 volts across the power system wires, but *each load* is operating at a reduced voltage. If anyone is going to get shocked, the odds are that it will be from coming into contact with the conductors of a particular load rather than from contact across the main wires of a power system.

There's only one disadvantage to this design: the consequences of one load failing open, or being turned off (assuming each load has a series on/off switch to interrupt current) are not good. Being a series circuit, if either load were to open, current would stop in the other load as well. For this reason, we need to modify the design a bit:

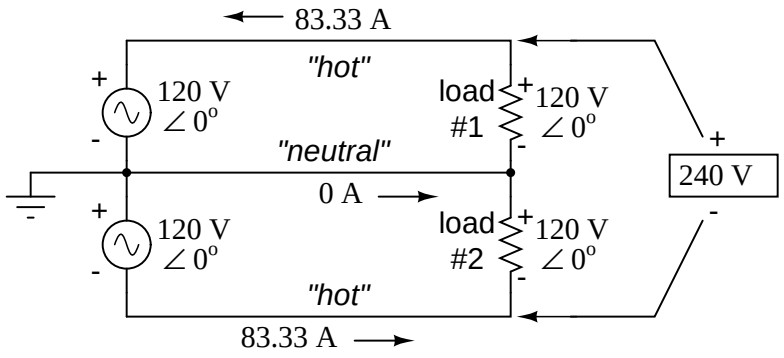

$E_{total} = (120\ V \angle 0^o) + (120\ V \angle 0^o)$

$E_{total} = 240\ V \angle 0^o$

$$I = \frac{P}{E}$$

$$I = \frac{10\ kW}{120\ V}$$

$P_{total} = (10\ kW) + (10\ kW)$

$P_{total} = 20\ kW$

$I = 83.33\ A$ *(for each load resistor)*

Instead of a single 240 volt power supply, we use two 120 volt supplies (in phase with each other!) in series to produce 240 volts, then run a third wire to the connection point between the loads to handle the eventuality of one load opening. This is called a *split-phase* power system. Three smaller wires are still cheaper than the two wires needed with the simple parallel design, so we're still ahead on efficiency. The astute observer will note that the neutral wire only has to carry the *difference* of current between the two loads back to the source. In the above case, with perfectly "balanced" loads consuming equal amounts of power, the neutral wire carries zero current.

Notice how the neutral wire is connected to earth ground at the power supply end. This is a common feature in power systems containing "neutral" wires, since grounding the neutral wire ensures the least possible voltage at any given time between any "hot" wire and earth ground.

An essential component to a split-phase power system is the dual AC voltage source. Fortunately, designing and building one is not difficult. Since most AC systems receive their power from a step-down transformer anyway (stepping voltage down from high distribution levels to a user-level voltage like 120 or 240), that transformer can be built with a center-tapped secondary winding:

Step-down transformer with center-tapped secondary winding

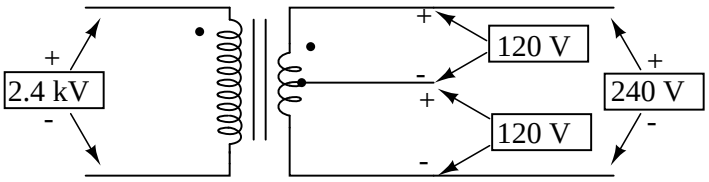

If the AC power comes directly from a generator (alternator), the coils can be similarly center-tapped for the same effect. The extra expense to include a center-tap connection in a transformer or alternator winding is minimal.

Here is where the (+) and (-) polarity markings really become important. This notation is often used to reference the phasings of *multiple* AC voltage sources, so it is clear whether they are aiding ("boosting") each other or opposing ("bucking") each other. If not for these polarity markings, phase relations between multiple AC sources might be very confusing. Note that the split-phase sources in the schematic (each one 120 volts $\angle\ 0^o$), with polarity marks (+) to (-) just like series-aiding batteries can alternatively be represented as such:

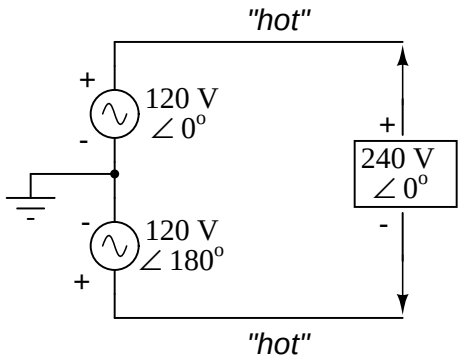

To mathematically calculate voltage between "hot" wires, we must *subtract* voltages, because their polarity marks show them to be opposed to each other:

Polar	*Rectangular*
$120 \angle 0^o$	120 + j0 V
- $120 \angle 180^o$	- (-120 + j0) V
$240 \angle 0^o$	240 + j0 V

If we mark the two sources' common connection point (the neutral wire) with the same polarity mark (-), we must express their relative phase shifts as being 180° apart. Otherwise, we'd be denoting two voltage sources in direct opposition with each other, which would give 0 volts between the two "hot" conductors. Why am I taking the time to elaborate on polarity marks and phase angles? It will make more sense in the next section!

Power systems in American households and light industry are most often of the split-phase variety, providing so-called 120/240 VAC power. The term "split-phase" merely refers to the split-voltage supply in such a system. In a more general sense, this kind of AC power supply is called *single phase* because both voltage waveforms are in phase, or in step, with each other.

The term "single phase" is a counterpoint to another kind of power system called "polyphase" which we are about to investigate in detail. Apologies for the long introduction leading up to the title-topic of this chapter. The advantages of polyphase power systems are more obvious if one first has a good understanding of single phase systems.

- **REVIEW:**

- *Single phase* power systems are defined by having an AC source with only one voltage waveform.

- A *split-phase* power system is one with multiple (in-phase) AC voltage sources connected in series, delivering power to loads at more than one voltage, with more than two wires. They are used primarily to achieve balance between system efficiency (low conductor currents) and safety (low load voltages).

- Split-phase AC sources can be easily created by center-tapping the coil windings of transformers or alternators.

10.2 Three-phase power systems

Split-phase power systems achieve their high conductor efficiency *and* low safety risk by splitting up the total voltage into lesser parts and powering multiple loads at those lesser voltages, while drawing currents at levels typical of a full-voltage system. This technique, by the way, works just as well for DC power systems as it does for single-phase AC systems. Such systems are usually referred to as *three-wire* systems rather than *split-phase* because "phase" is a concept restricted to AC.

But we know from our experience with vectors and complex numbers that AC voltages don't always add up as we think they would if they are out of phase with each other. This principle, applied to power systems, can be put to use to make power systems with even greater conductor efficiencies and lower shock hazard than with split-phase.

Suppose that we had two sources of AC voltage connected in series just like the split-phase system we saw before, except that each voltage source was 120° out of phase with the other:

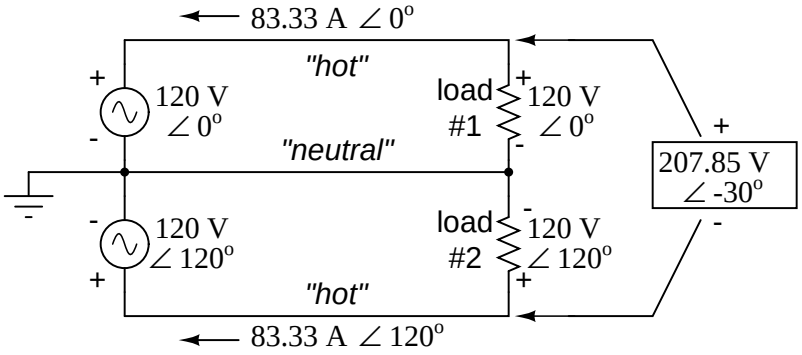

Since each voltage source is 120 volts, and each load resistor is connected directly in parallel with its respective source, the voltage across each load *must* be 120 volts as well. Given load currents of 83.33 amps, each load must still be dissipating 10 kilowatts of power. However, voltage between the two "hot" wires is not 240 volts (120 $\angle$ 0° - 120 $\angle$ 180°) because the phase difference between the two sources is not 180°. Instead, the voltage is:

$$E_{total} = (120 \text{ V} \angle 0^o) - (120 \text{ V} \angle 120^o)$$

$$E_{total} = 207.85 \text{ V} \angle -30^o$$

Nominally, we say that the voltage between "hot" conductors is 208 volts (rounding up), and thus the power system voltage is designated as 120/208.

If we calculate the current through the "neutral" conductor, we find that it is *not* zero, even with balanced load resistances. Kirchhoff's Current Law tells us that the currents entering and exiting the node between the two loads must be zero:

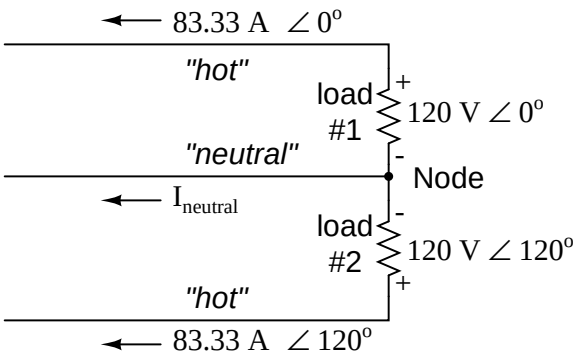

$-I_{load\#1} - I_{load\#2} - I_{neutral} = 0$

$-I_{neutral} = I_{load\#1} + I_{load\#2}$

$I_{neutral} = -I_{load\#1} - I_{load\#2}$

$I_{neutral} = -(83.33\ A \angle 0^{o}) - (83.33\ A \angle 120^{0})$

$I_{neutral} = 83.33\ A \angle 240^{o}$ *or* $83.33\ A \angle -120^{o}$

So, we find that the "neutral" wire is carrying a full 83.33 amps, just like each "hot" wire.

Note that we are still conveying 20 kW of total power to the two loads, with each load's "hot" wire carrying 83.33 amps as before. With the same amount of current through each "hot" wire, we must use the same gage copper conductors, so we haven't reduced system cost over the split-phase 120/240 system. However, we have realized a gain in safety, because the overall voltage between the two "hot" conductors is 32 volts lower than it was in the split-phase system (208 volts instead of 240 volts).

The fact that the neutral wire is carrying 83.33 amps of current raises an interesting possibility: since it's carrying current anyway, why not use that third wire as another "hot" conductor, powering another load resistor with a third 120 volt source having a phase angle of 240°? That way, we could transmit *more* power (another 10 kW) without having to add any more conductors. Let's see how this might look:

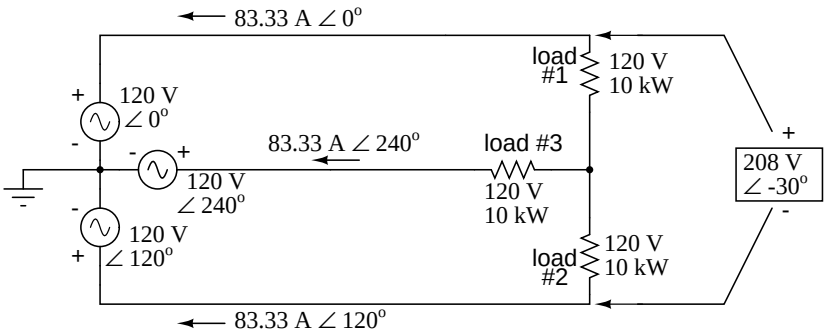

A full mathematical analysis of all the voltages and currents in this circuit would necessitate the use of a network theorem, the easiest being the Superposition Theorem. I'll spare you the long, drawn-out calculations because you should be able to intuitively understand that the three voltage sources at three different phase angles will deliver 120 volts each to a balanced triad of load resistors. For proof of this, we can use SPICE to do the math for us:

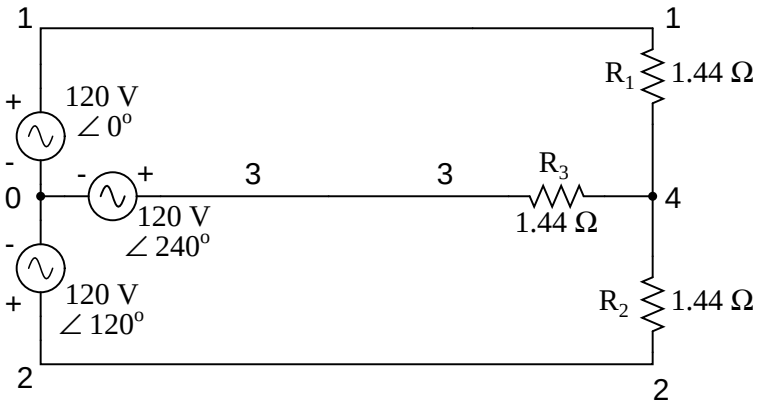


```
120/208 polyphase power system
v1 1 0 ac 120 0 sin
v2 2 0 ac 120 120 sin
v3 3 0 ac 120 240 sin
r1 1 4 1.44
r2 2 4 1.44
r3 3 4 1.44
.ac lin 1 60 60
.print ac v(1,4) v(2,4) v(3,4)
.print ac v(1,2) v(2,3) v(3,1)
.print ac i(v1) i(v2) i(v3)
.end

VOLTAGE ACROSS EACH LOAD
freq        v(1,4)      v(2,4)      v(3,4)
```

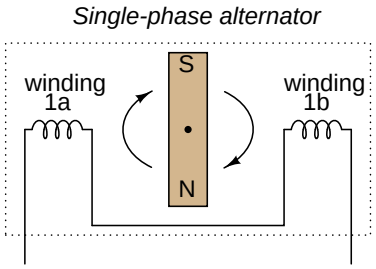

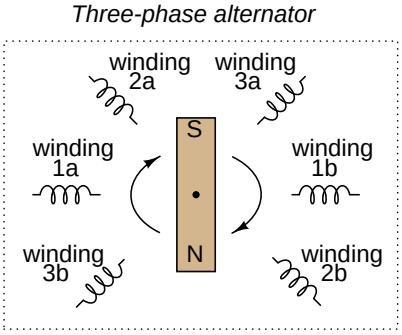

Together, the six "pole" windings of a three-phase alternator are connected to comprise three winding pairs, each pair producing AC voltage with a phase angle 120° shifted from either of the other two winding pairs. The interconnections between pairs of windings (as shown for the single-phase alternator: the jumper wire between windings 1a and 1b) have been omitted from the three-phase alternator drawing for simplicity.

In our example circuit, we showed the three voltage sources connected together in a "Y" configuration (sometimes called the "star" configuration), with one lead of each source tied to a common point (the node where we attached the "neutral" conductor). The common way to depict this connection scheme is to draw the windings in the shape of a "Y" like this:

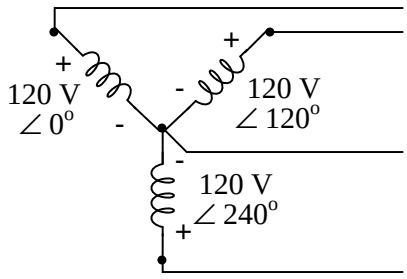

The "Y" configuration is not the only option open to us, but it is probably the easiest to understand at first. More to come on this subject later in the chapter.

REVIEW

- A *single phase* power system is one where there is only one AC voltage source (one source voltage waveform).

- A *split phase* power system is one where there are two voltage sources, 180° phase-shifted from each other, powering a two series-connected loads. The advantage of this is the ability to have lower conductor currents while maintaining low load voltages for safety reasons.

- A *polyphase* power system uses multiple voltage sources at different phase angles from each other (many "phases" of voltage waveforms at work). A polyphase power system can deliver more power at less voltage with smaller-gage conductors than single- or split-phase systems.

- The phase-shifted voltage sources necessary for a polyphase power system are created in alternators with multiple sets of wire windings. These winding sets are spaced around the circumference of the rotor's rotation at the desired angle(s).

10.3 Phase rotation

Let's take the three-phase alternator design laid out earlier and watch what happens as the magnet rotates:

Three-phase alternator

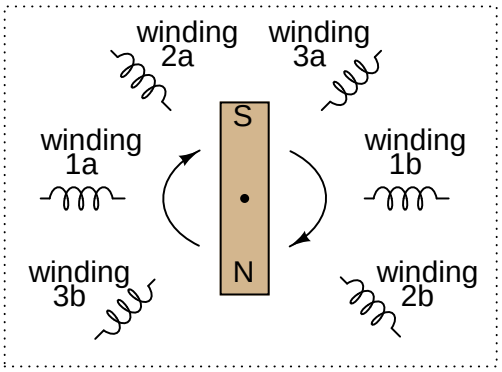

The phase angle shift of 120° is a function of the actual rotational angle shift of the three pairs of windings. If the magnet is rotating clockwise, winding 3 will generate its peak instantaneous voltage exactly 120° (of alternator shaft rotation) after winding 2, which will hits its peak 120° after winding 1. The magnet passes by each pole pair at different positions in the rotational movement of the shaft. Where we decide to place the windings will dictate the amount of phase shift between the windings' AC voltage waveforms. If we make winding 1 our "reference" voltage source for phase angle (0°), then winding 2 will have a phase angle of -120° (120° lagging, or 240° leading) and winding 3 an angle of -240° (or 120° leading).

This sequence of phase shifts has a definite order. For clockwise rotation of the shaft, the order is 1-2-3 (winding 1 peaks first, them winding 2, then winding 3). This order keeps repeating itself as long as we continue to rotate the alternator's shaft:

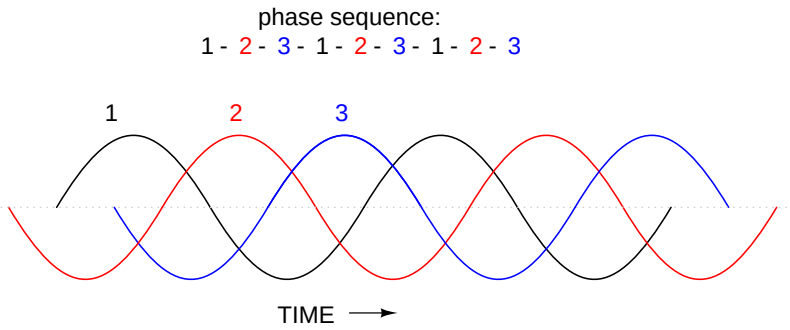

However, if we *v* the rotation of the alternator s shaft (turn it counter-clockwise), the magnet will pass by the pole pairs in the opposite sequence. nstead of 1-2-3, we ll have 3-2-1. Now, winding 2 s waveform will be *ad ng* 120° ahead of 1 instead of lagging, and 3 will be another 120° ahead of 2:

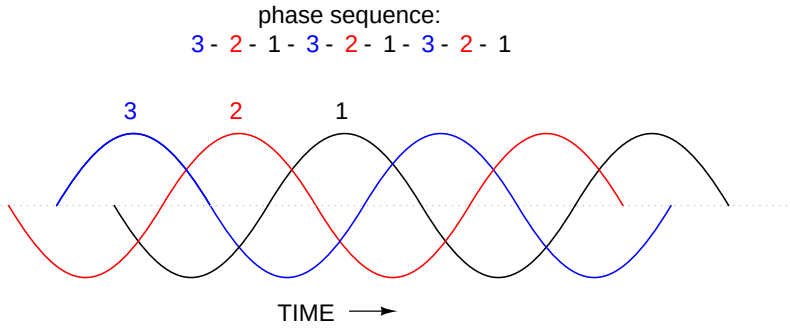

he order of voltage waveform sequences in a polyphase system is called *pha tat n* or *pha qu n* . f we re using a polyphase voltage source to power resistive loads, phase rotation will make no di erence at all. Whether 1-2-3 or 3-2-1, the voltage and current magnitudes will all be the same. here are some applications of three-phase power, as we will see shortly, that depend on having phase rotation being one way or the other. ince voltmeters and ammeters would be useless in telling us what the phase rotation of an operating power system is, we need to have some other kind of instrument capable of doing theob .

One ingenious circuit design uses a capacitor to introduce a phase shift between voltage and current, which is then used to detect the sequence by way of comparison between the brightness of two indicator lamps:

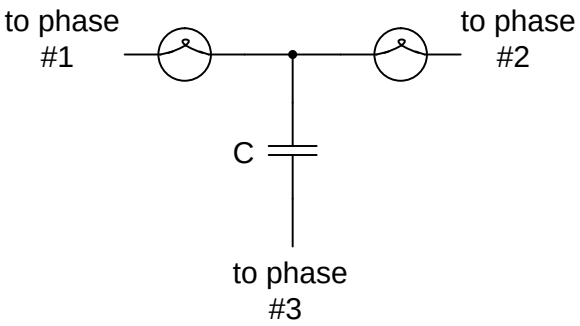

The two lamps are of equal filament resistance and wattage. The capacitor is sized to have approximately the same amount of reactance at system frequency as each lamp's resistance. If the capacitor were to be replaced by a resistor of equal value to the lamps' resistance, the two lamps would glow at equal brightness, the circuit being balanced. However, the capacitor introduces a phase shift between voltage and current in the third leg of the circuit equal to 90°. This phase shift, greater than 0° but less than 120°, skews the voltage and current values across the two lamps according to their phase shifts relative to phase 3. The following SPICE analysis demonstrates what will happen:

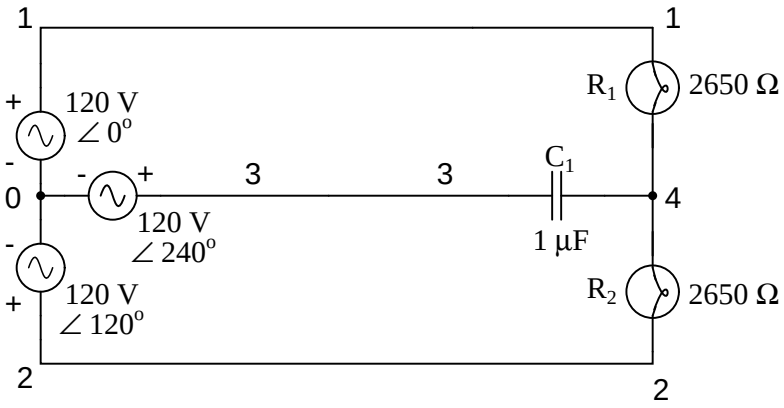


```
phase rotation detector -   sequence   v1-v2-v3
v1 1 0 ac 120 0 sin
v2 2 0 ac 120 120 sin
v3 3 0 ac 120 240 sin
r1 1 4 2650
r2 2 4 2650
c1 3 4 1u
.ac lin 1 60 60
.print ac v(1,4) v(2,4) v(3,4)
.end

freq          v(1,4)      v(2,4)      v(3,4)
6.000E+01     4.810E+01   1.795E+02   1.610E+02
```

The resulting phase shift from the capacitor causes the voltage across phase 1 lamp (between nodes 1 and 4) to fall to 4.1 volts and the voltage across phase 2 lamp (between nodes 2 and 4) to rise to 179.5 volts, making the first lamp dim and the second lamp bright. Just the opposite will happen if the phase sequence is reversed:

```
phase rotation detector - sequence = v3-v2-v1
v1 1 0 ac 120 240 sin
v2 2 0 ac 120 120 sin
v3 3 0 ac 120 0 sin
r1 1 4 2650
r2 2 4 2650
c1 3 4 1u
.ac lin 1 60 60
.print ac v(1,4) v(2,4) v(3,4)
.end
```

```
freq          v(1,4)      v(2,4)      v(3,4)
6.000E+01     1.795E+02   4.810E+01   1.610E+02
```

Here, the first lamp receives 179.5 volts while the second receives only 4.1 volts.

We've investigated how phase rotation is produced (the order in which pole pairs get passed by the alternator's rotating magnet) and how it can be changed by reversing the alternator's shaft rotation. However, reversal of the alternator's shaft rotation is not usually an option open to an end-user of electrical power supplied by a nationwide grid ("the" alternator actually being the combined total of all alternators in all power plants feeding the grid). Here is an *even easier* way to reverse phase sequence than reversing alternator rotation: just exchange any two of the three "hot" wires going to a three-phase load.

This trick makes more sense if we take another look at a running phase sequence of a three-phase voltage source:

```
1-2-3 rotation   1-2-3-1-2-3-1-2-3-1-2-3-1-2-3 . . .
3-2-1 rotation   3-2-1-3-2-1-3-2-1-3-2-1-3-2-1 . . .
```

What is commonly designated as a "1-2-3" phase rotation could just as well be called "2-3-1" or "3-1-2," going from left to right in the number string above. Likewise, the opposite rotation (3-2-1) could just as easily be called "2-1-3" or "1-3-2."

Starting out with a phase rotation of 3-2-1, we can try all the possibilities for swapping any two of the wires at a time and see what happens to the resulting sequence:

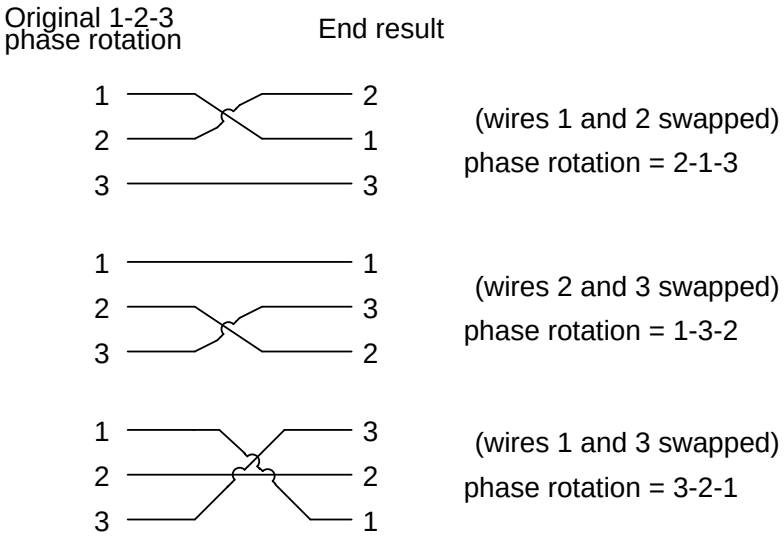

No matter which pair of "hot" wires out of the three we choose to swap, the phase rotation ends up being reversed (1-2-3 gets changed to 2-1-3, 1-3-2 or 3-2-1, all equivalent).

REVIEW

- *Phase rotation*, or *phase sequence*, is the order in which the voltage waveforms of a polyphase AC source reach their respective peaks. For a three-phase system, there are only two possible phase sequences: 1-2-3 and 3-2-1, corresponding to the two possible directions of alternator rotation.

- Phase rotation has no impact on resistive loads, but it will have impact on unbalanced reactive loads, as shown in the operation of a phase rotation detector circuit.

- Phase rotation can be reversed by swapping any two of the three "hot" leads supplying three-phase power to a three-phase load.

10.4 Polyphase motors

Perhaps the most important benefit of polyphase AC power over single-phase is the design and operation of AC motors. As we studied in the first chapter of this book, some types of AC motors are virtually identical in construction to their alternator (generator) counterparts, consisting of stationary wire windings and a rotating magnet assembly. (Other AC motor designs are not quite this simple, but we will leave those details to another lesson).

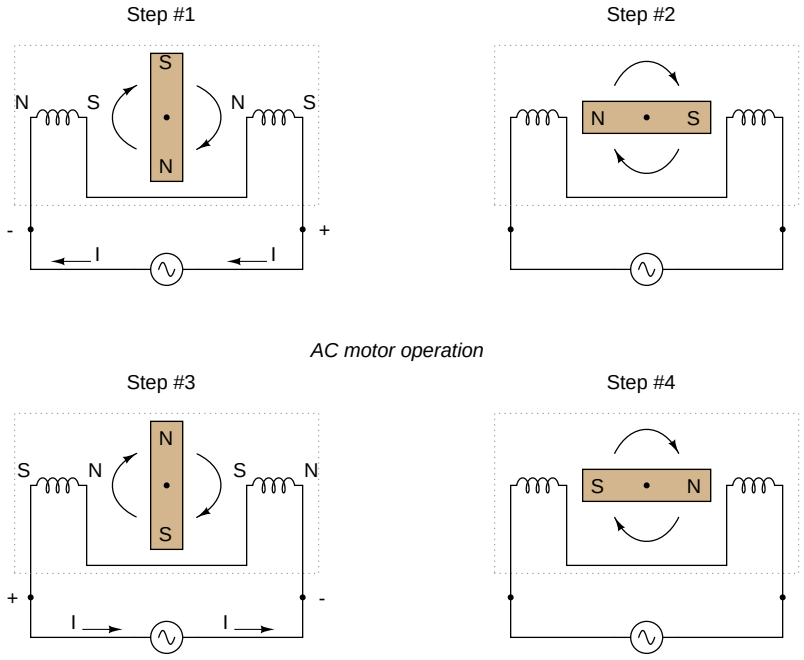

If the rotating magnet is able to keep up with the frequency of the alternating current energizing the electromagnet windings (coils), it will continue to be pulled around clockwise. However, clockwise is not the only valid direction for this motor's shaft to spin. It could just as easily be powered in a counter-clockwise direction by the same AC voltage waveform:

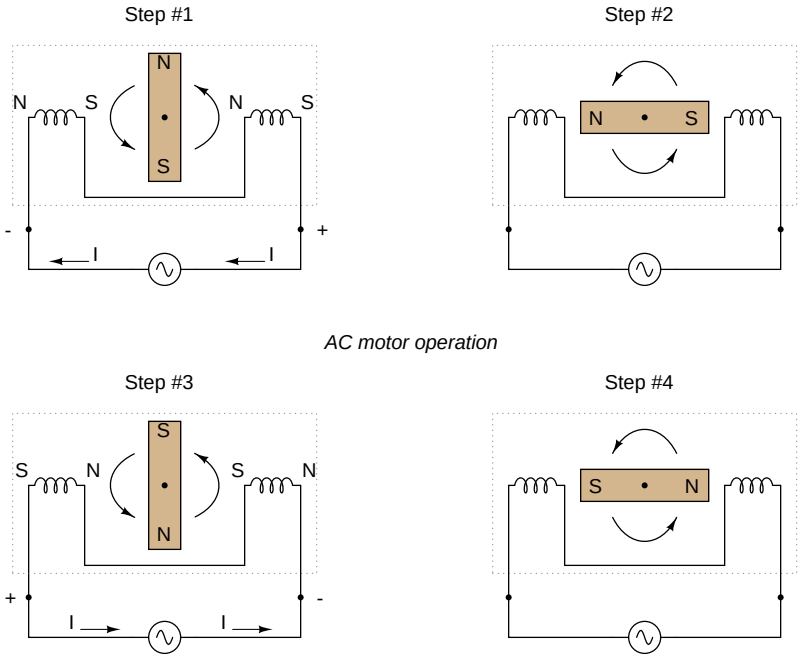

Notice that with the exact same sequence of polarity cycles (voltage, current, and magnetic poles produced by the coils), the magnetic rotor can spin in either direction. This is a common trait of all single-phase AC "induction" and "synchronous" motors: they have no normal or "correct" direction of rotation. The natural question should arise at this point: how can the motor get started in the intended direction if it can run either way just as well? The answer is that these motors need a little help getting started. Once helped to spin in a particular direction, they will continue to spin that way as long as AC power is maintained to the windings.

Where that "help" comes from for a single-phase AC motor to get going in one direction can vary. Usually, it comes from an additional set of windings positioned differently from the main set, and energized with an AC voltage that is out of phase with the main power:

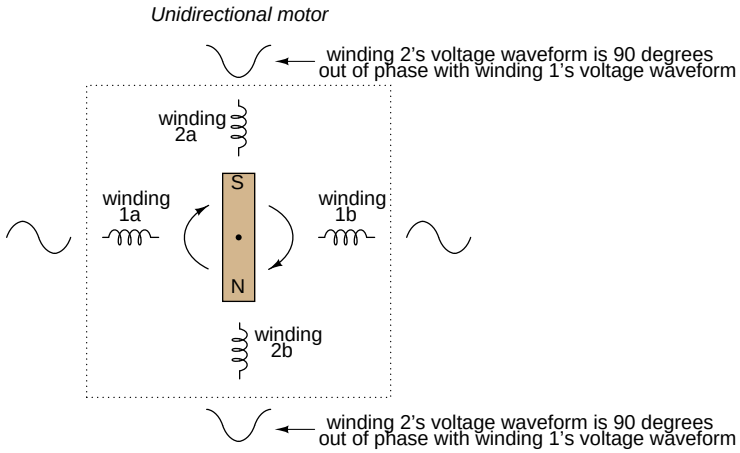

hese supplementary coils are typically connected in series with a capacitor to introduce a phase shift in current between the two sets of windings:

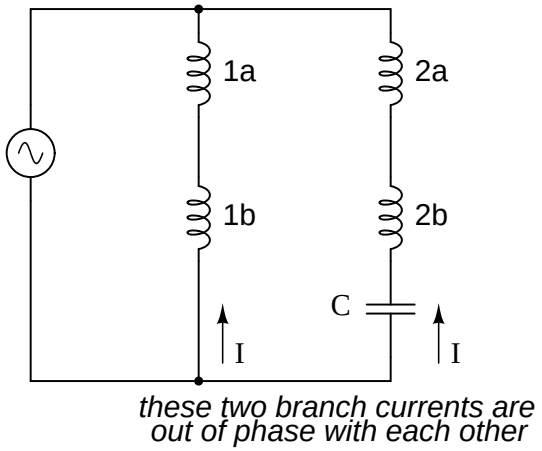

hat phase shift creates magnetic fields from coils 2a and 2b that are equally out of step with the fields from coils 1a and 1b. he result is a set of magnetic fields with a definite phase rotation . t is this phase rotation that pulls the rotating magnet around in a definite direction.

Polyphase AC motors require no such trickery to spin in a definite direction. Because their supply voltage waveforms already have a definite rotation sequence, so do the respective magnetic fields generated by the motor s stationary windings. n fact, the combination of all three phase winding sets working together creates what is often called a *rotating magnetic field*. t was this concept of a rotating magnetic field that inspired Nikola esla to design the world s first polyphase electrical systems (simply to make simpler, more efficient motors). he line current and safety advantages of polyphase power over single phase power were discovered later.

What can be a confusing concept is made much clearer through analogy. Have you ever seen a row of blinking light bulbs such as the kind used in Christmas decorations? ome strings appear to "move" in a definite direction as the bulbs alternately glow and darken in sequence. Other strings just blink on and off with no apparent motion. What makes the difference between the two types

of bulb strings? Answer: phase shift!

Examine a string of lights where every other bulb is lit at any given time:

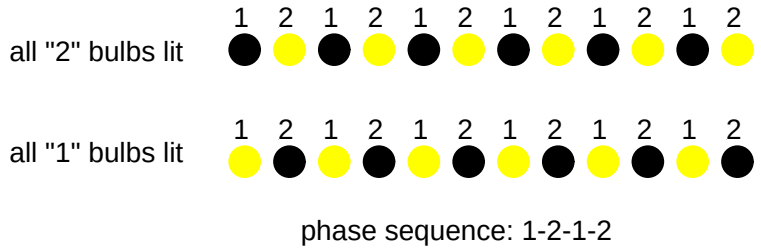

When all of the "1" bulbs are lit, the "2" bulbs are dark, and visa-versa. With this blinking sequence, there is no definite "motion" to the bulbs' light. Your eyes could follow a "motion" from left to right just as easily as from right to left. Technically, the "1" and "2" bulb blinking sequences are 180° out of phase (exactly opposite each other). This is analogous to the single-phase AC motor, which can run just as easily in either direction, but which cannot start on its own because its magnetic field alternation lacks a definite "rotation."

Now let's examine a string of lights where there are three sets of bulbs to be sequenced instead of just two, and these three sets are equally out of phase with each other:

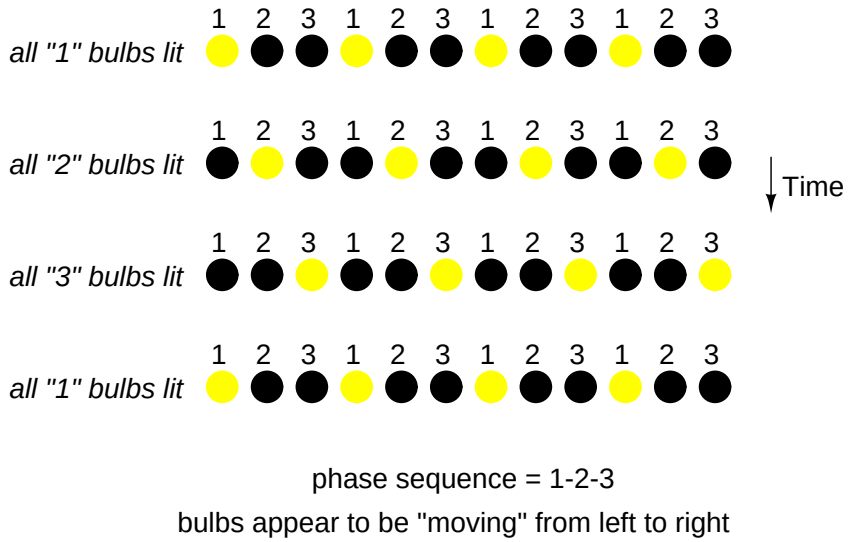

If the lighting sequence is 1-2-3 (the sequence shown), the bulbs will appear to "move" from left to right. Now imagine this blinking string of bulbs arranged into a circle:

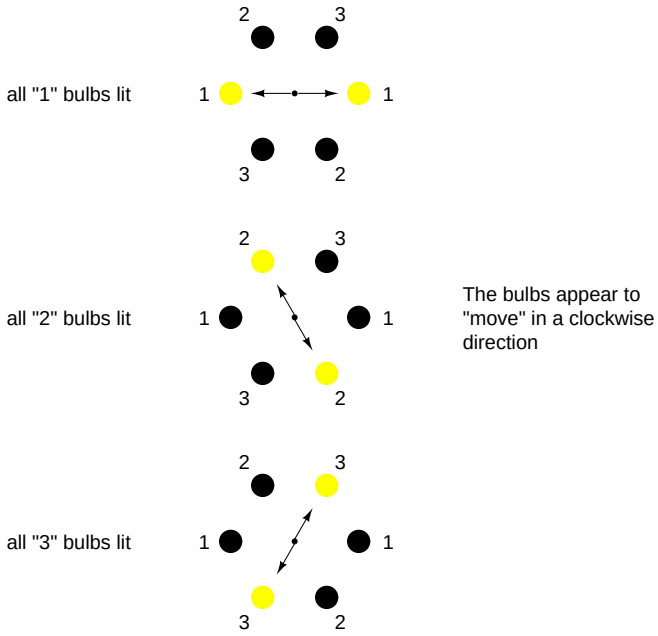

Now the lights appear to be "moving" in a clockwise direction because they are arranged around a circle instead of a straight line. It should come as no surprise that the appearance of motion will reverse if the phase sequence of the bulbs is reversed.

The blinking pattern will either appear to move clockwise or counter-clockwise depending on the phase sequence. This is analogous to a three-phase AC motor with three sets of windings energized by voltage sources of three different phase shifts:

Three-phase AC motor

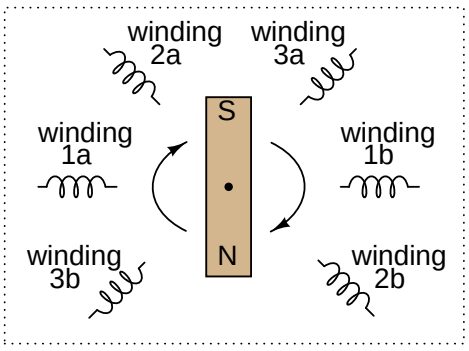

A phase sequence of 1-2-3 will spin the magnet in a clockwise direction. A phase sequence of 3-2-1 will spin the magnet in a counter-clockwise direction.

With phase shifts of less than 0° we get true rotation of the magnetic field. With single-phase motors, the rotating magnetic field necessary for self-starting must to be created by way of capacitive

phase shift. With polyphase motors, the necessary phase shifts are there already. Plus, the direction of shaft rotation for polyphase motors is very easily reversed: just swap any two "hot" wires going to the motor, and it will run in the opposite direction!

REVIEW

- AC "induction" and "synchronous" motors work by having a rotating magnet follow the alternating magnetic fields produced by stationary wire windings.
- Single-phase AC motors of this type need help to get started spinning in a particular direction.
- By introducing a phase shift of less than 0° to the magnetic fields in such a motor, a definite direction of shaft rotation can be established.
- Single-phase induction motors often use an auxiliary winding connected in series with a capacitor to create the necessary phase shift.
- Polyphase motors don't need such measures; their direction of rotation is fixed by the phase sequence of the voltage they're powered by.
- Swapping any two "hot" wires on a polyphase AC motor will reverse its phase sequence, thus reversing its shaft rotation.

Y (or "star") configuration

Initially we explored the idea of three-phase power systems by connecting three voltage sources together in what is commonly known as the "Y" (or "star") configuration. This configuration of voltage sources is characterized by a common connection point joining one side of each source:

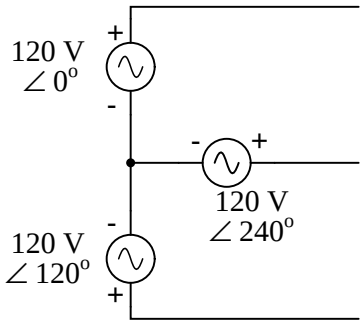

If we draw a circuit showing each voltage source to be a coil of wire (alternator or transformer winding) and do some slight rearranging, the "Y" configuration becomes more obvious:

3-phase, 4-wire "Y" connection

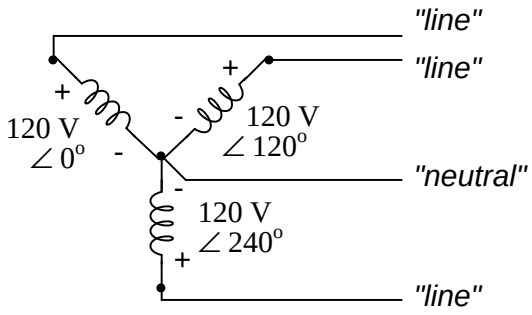

The three conductors leading away from the voltage sources (windings) toward a load are typically called *neutral*, while the windings themselves are typically called *phases*. In a Y-connected system, there may or may not be a neutral wire attached at the junction point in the middle, although it certainly helps alleviate potential problems should one element of a three-phase load fail open, as discussed earlier:

3-phase, 3-wire "Y" connection

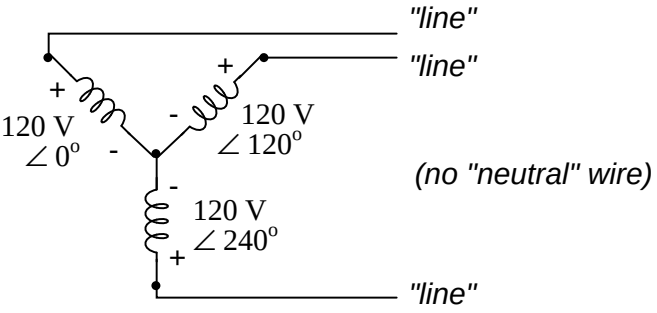

When we measure voltage and current in three-phase systems, we need to be specific as to what we're measuring. *Line voltage* refers to the amount of voltage measured between any two line conductors in a balanced three-phase system. With the above circuit, the line voltage is roughly 208 volts. *Phase voltage* refers to the voltage measured across any one component (source winding or load impedance) in a balanced three-phase source or load. For the circuit shown above, the phase voltage is 120 volts. The terms *line current* and *phase current* follow the same logic: the former referring to current through any one line conductor, and the latter to current through any one component.

Y-connected sources and loads always have line voltages greater than phase voltages, and line currents equal to phase currents. If the Y-connected source or load is balanced, the line voltage will be equal to the phase voltage times the square root of 3:

For "Y" circuits:

$$E_{line} = \sqrt{3}\ E_{phase}$$

$$I_{line} = I_{phase}$$

However, the "Y" configuration is not the only valid one for connecting three-phase voltage source or load elements together. Another configuration is known as the "Delta," for its geometric resemblance to the Greek letter of the same name (Δ). Take close notice of the polarity for each winding in the drawing below:

3-phase, 3-wire Δ connection

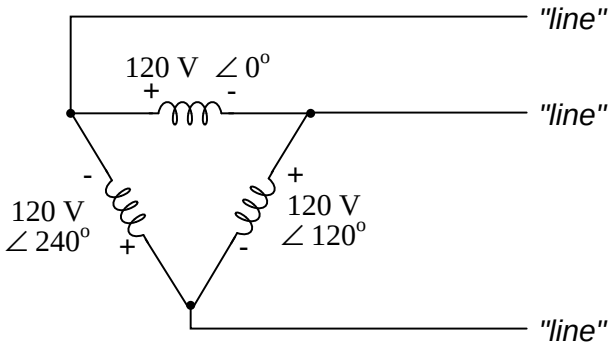

At first glance it seems as though three voltage sources like this would create a short-circuit, electrons flowing around the triangle with nothing but the internal impedance of the windings to hold them back. Due to the phase angles of these three voltage sources, however, this is not the case.

One quick check of this is to use Kirchhoff's Voltage Law to see if the three voltages around the loop add up to zero. If they do, then there will be no voltage available to push current around and around that loop, and consequently there will be no circulating current. Starting with the top winding and progressing counter-clockwise, our KVL expression looks something like this:

$$(120\ V \angle 0^o) + (120\ V \angle 240^o) + (120\ V \angle 120^o)$$

Does it all equal 0?

Yes!

Indeed, if we add these three vector quantities together, they do add up to zero. Another way to verify the fact that these three voltage sources can be connected together in a loop without resulting in circulating currents is to open up the loop at one junction point and calculate voltage across the break:

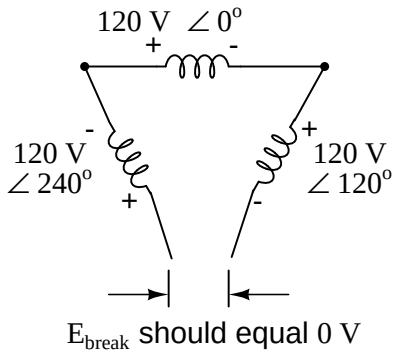

tarting with the right winding (120 V ∠ 120°) and progressing counter-clockwise, our KVL equation looks like this:

$$(120\ \text{V} \angle 120^\circ) + (120 \angle 0^\circ) + (120\ \text{V} \angle 240^\circ) + E_{break} = 0$$

$$0 + E_{break} = 0$$

$$E_{break} = 0$$

ure enough, there will be zero voltage across the break, telling us that no current will circulate within the triangular loop of windings when that connection is made complete.

Having established that a Δ-connected three-phase voltage source will not burn itself to a crisp due to circulating currents, we turn to its practical use as a source of power in three-phase circuits. Because each pair of line conductors is connected directly across a single winding in a Δ circuit, the line voltage will be equal to the phase voltage. Conversely, because each line conductor attaches at a node between two windings, the line current will be the vector sum of the two oining phase currents. Not surprisingly, the resulting equations for a Δ configuration are as follows:

For Δ ("delta") circuits:

$$E_{line} = E_{phase}$$

$$I_{line} = \sqrt{3}\ I_{phase}$$

Let s see how this works in an example circuit:

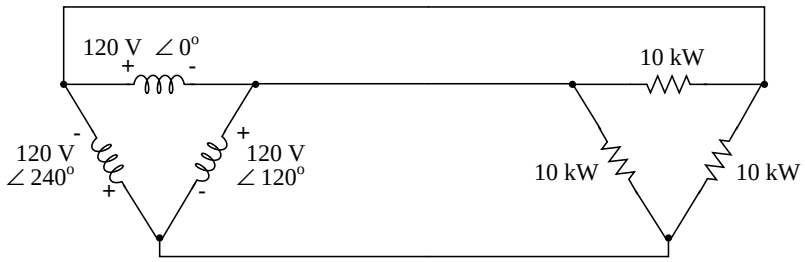

With each load resistance receiving 120 volts from its respective phase winding at the source, the current in each phase of this circuit will be 3.33 amps:

$$I = \frac{P}{E}$$

$$I = \frac{10\ \text{kW}}{120\ \text{V}}$$

$I = 83.33$ A *(for each load resistor and source winding)*

$$I_{line} = \sqrt{3}\ I_{phase}$$

$$I_{line} = \sqrt{3}\ (83.33\ \text{A})$$

$I_{line} = 144.34$ A

So, the each line current in this three-phase power system is equal to 144.34 amps, substantially more than the line currents in the Y-connected system we looked at earlier. One might wonder if we've lost all the advantages of three-phase power here, given the fact that we have such greater conductor currents, necessitating thicker, more costly wire. The answer is no. Although this circuit would require three number 1 gage copper conductors (at 1000 feet of distance between source and load this equates to a little over 750 pounds of copper for the whole system), it is still less than the 1000+ pounds of copper required for a single-phase system delivering the same power (30 kW) at the same voltage (120 volts conductor-to-conductor).

One distinct advantage of a Δ-connected system is its lack of a neutral wire. With a Y-connected system, a neutral wire was needed in case one of the phase loads were to fail open (or be turned off), in order to keep the phase voltages at the load from changing. This is not necessary (or even possible!) in a Δ-connected circuit. With each load phase element directly connected across a respective source phase winding, the phase voltage will be constant regardless of open failures in the load elements.

Perhaps the greatest advantage of the Δ-connected source is its fault tolerance. It is possible for one of the windings in a Δ-connected three-phase source to fail open without affecting load voltage or current!

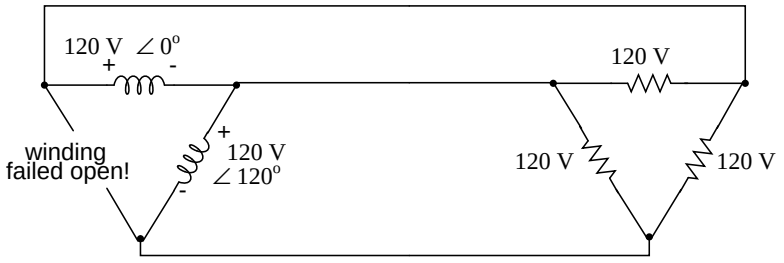

Even with the winding failure in the source, line voltage will still be 120 V and load phase voltage will still be 120 V. The only difference will be extra current in the remaining functioning source windings.

The only consequence of a source winding failing open for a Δ-connected source is increased phase current in the remaining windings. Compare this fault tolerance with a Y-connected system suffering an open source winding:

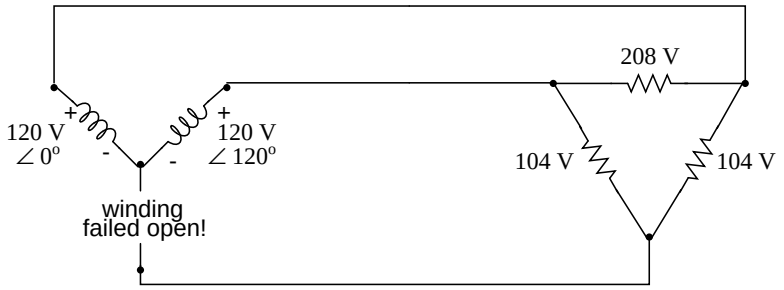

With a Δ-connected load, two of the resistances are energized at reduced voltage while one remains at the original line voltage, 208 volts. A Y-connected load suffers even worse fate with this same winding failure in a Y-connected source:

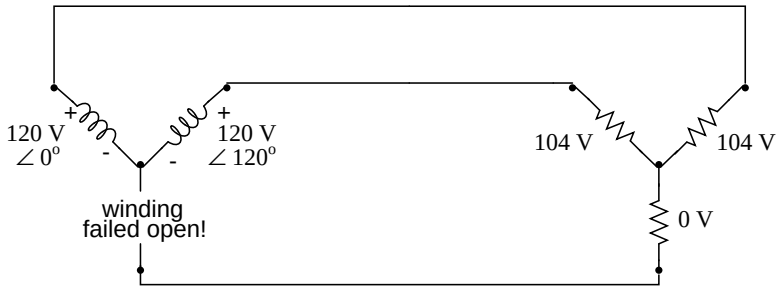

In this case, two load resistances are energized at reduced voltage while the third loses supply voltage completely! For this reason, Δ-connected sources are preferred for reliability. However, if dual voltages are needed (e.g. 120/208) or preferred for lower line currents, Y-connected systems are the configuration of choice.

REVIEW

- The conductors connected to the three points of a three-phase source or load are called *lines*.
- The three components comprising a three-phase source or load are called *phases*.
- *Line voltage* is the voltage measured between any two lines in a three-phase circuit.
- *Phase voltage* is the voltage measured across a single component in a three-phase source or load.
- *Line current* is the current through any one line between a three-phase source and load.
- *Phase current* is the current through any one component comprising a three-phase source or load.
- In balanced "Y" circuits, line voltage is equal to phase voltage times the square root of 3, while line current is equal to phase current.

For "Y" circuits:

$$E_{line} = \sqrt{3}\ E_{phase}$$

- $I_{line} = I_{phase}$
- In balanced Δ circuits, line voltage is equal to phase voltage, while line current is equal to phase current times the square root of 3.

For Δ ("delta") circuits:

$$E_{line} = E_{phase}$$

- $$I_{line} = \sqrt{3}\ I_{phase}$$
- Δ-connected three-phase voltage sources give greater reliability in the event of winding failure than Y-connected sources. However, Y-connected sources can deliver the same amount of power with less line current than Δ-connected sources.

10.6 Special transformer circuits

Since three-phase is used often for power distribution systems, it makes sense that we would need three-phase transformers to be able to step voltages up or down. This is only partially true, as regular single-phase transformers can be hanged together to transform power between two three-phase systems in a variety of configurations, eliminating the requirement for a special three-phase transformer. However, special three-phase transformers are built for those tasks, and are able to perform with less material requirement, less size, and less weight from their modular counterparts.

A three-phase transformer is made of three sets of primary and secondary windings, each set wound around one leg of an iron core assembly. Essentially it looks like three single-phase transformers sharing a joined core:

Three-phase transformer core

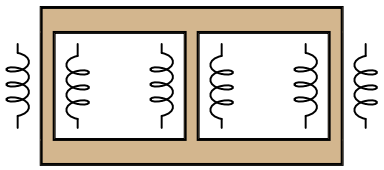

Those six primary and secondary windings will be connected either Δ or Y configurations to form a complete unit. The various combinations of ways that these windings can be connected together will be the focus of this section.

When three windings or sets are all on common core assembly or each winding pair is a separate transformer, the winding connection options are the same:

- **Primary - Secondary**
- Y - Y
- Y - Δ
- Δ - Y
- Δ - Δ

The reasons for choosing a Y or Δ configuration for transformer winding connections are the same as for any other three-phase application: Y connections provide the opportunity for multiple voltages, while Δ connections enjoy a higher level of reliability (if winding failure open, the other two can still maintain full line voltages to the load).

Probably the most important aspect of connecting three sets of primary and secondary windings together to form a three-phase transformer bank is attention to proper winding phasing (the dots used to denote "polarity" of windings). Remember the proper phase relationships between the phase windings of Δ and Y:

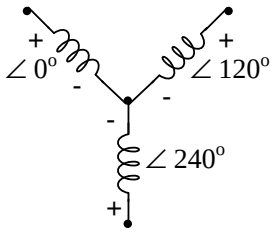

With these phase angles, the center point of the Y must tie either all "-" or all "+" winding ends together.

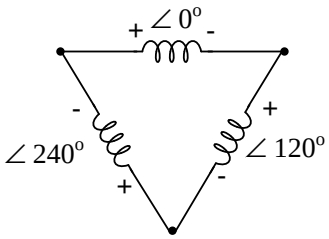

With these phase angles, the winding polarities must stack together in a complementary manner (+ to -).

Getting this phasing correct when the windings aren't shown in regular Y or Δ configuration can be tricky. Let's illustrate:

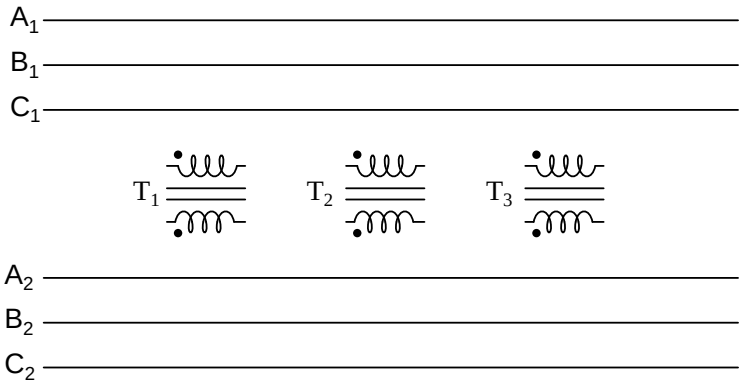

Three individual transformers are to be connected together to transform power from one three-phase system to another. First, I'll show this wiring connection for a Y configuration:

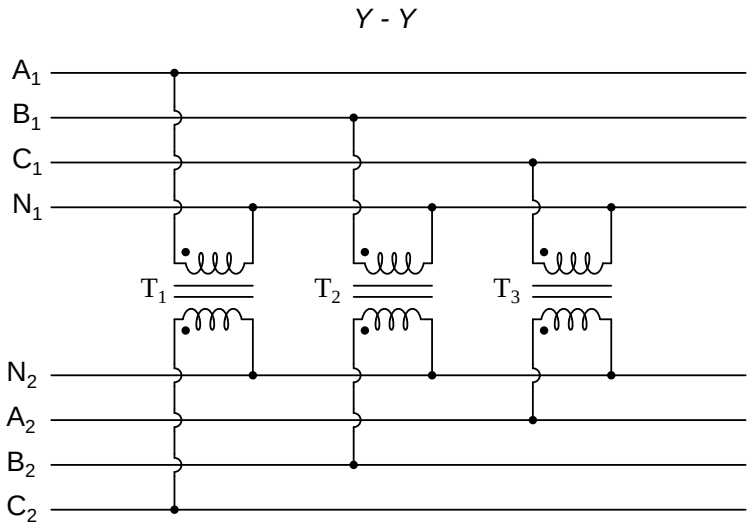

Notice how all the winding ends marked with dots are connected to their respective phases A, B, and C, while the non-dot ends are connected together to form the center of each "Y". Having both primary and secondary windings set to "Y" formations allows for the use of the neutral conductors (N_1 and N_2) in a power system.

Now, we'll take a look at a Y-Δ configuration:

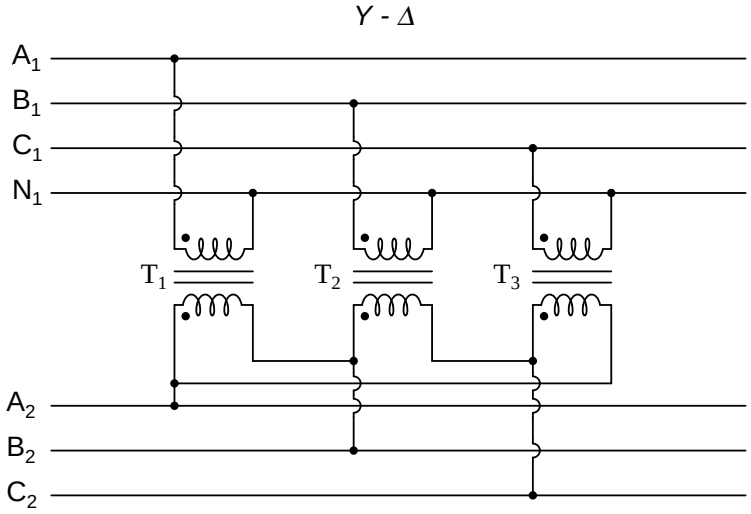

Notice how these secondary windings (bottom set) are connected in a chain, the "dot" side of one winding connected to the "non-dot" side of the next, forming the loop. At every connection point between pairs of windings, a connection is made to a line of these conductors power system (A, B, and C).

Now, let's examine a Δ-Y system:

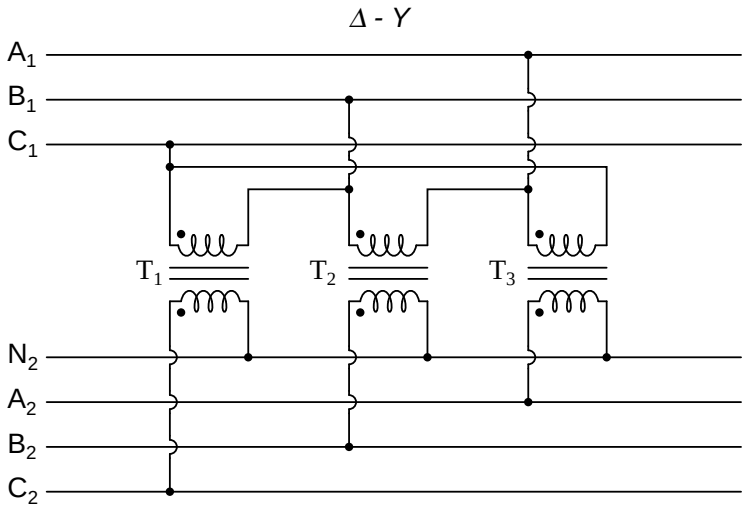

Such a configuration would allow for the provision of multiple voltages (line-to-line or line-to-neutral) in three-phase power system, from a source power system having one neutral.

And finally, we turn to the Δ -Δ configuration:

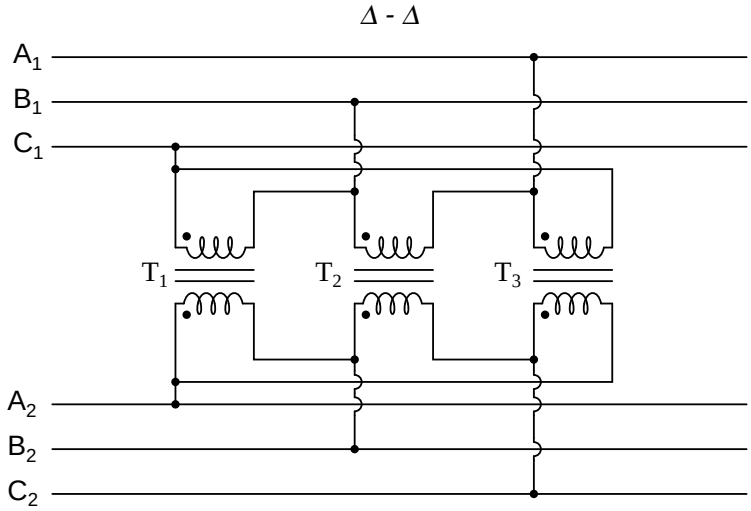

When there is no need for a neutral conductor in the secondary power system, Δ -Δ connection schemes are preferred because of their inherent reliability of the Δ configuration.

Considering that a Δ configuration can operate satisfactorily using only windings, some power system designers choose to create a three-phase transformer bank with only two transformers, representing a Δ-Δ configuration with a missing winding on both the primary and secondary sides:

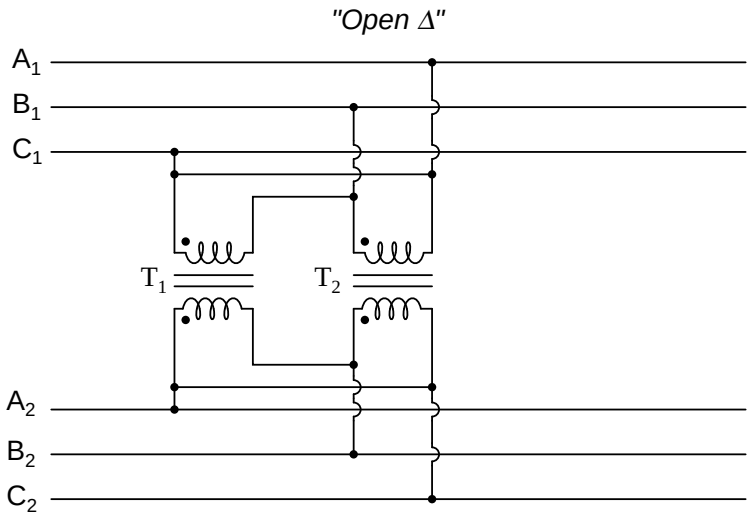

This configuration is called "Vöor" (Open-Δ." Of course, each of the two transformers have to be oversized to handle the same amount of power as three in a standard Δ configuration, but the overall size, weight, and cost advantages are often worth the Bar in mind, however, that in the binding set is using from the Δ shape, this system no longer provides the fault tolerance of a normal Δ-Δ system. If one of the two transformers were to fail, the load voltage and current would definitely be affected.

Chapter 11

POWER FACTOR

11.1 Power in resistive and reactive AC circuits

Consider a circuit for a single-phase AC power system, where a 120 volt, 60 Hz AC voltage source is delivering power to a resistive load:

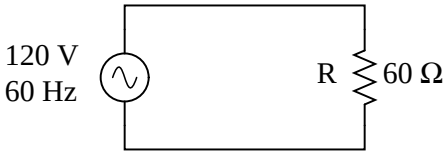

$Z_R = 60 + j0\ \Omega$ *or* $60\ \Omega \angle 0^o$

$$I = \frac{E}{Z}$$

$$I = \frac{120\ V}{60\ \Omega}$$

$I = 2\ A$

In this example, the current through the load would be 2 amps RMS. The power dissipated at the load would be 240 watts. Because this is a purely resistive (no reactance), the current is in phase with the voltage, and calculations look similar to that in an equivalent DC circuit. If we were to plot the voltage, current, and power waveforms for this circuit, it would look like this:

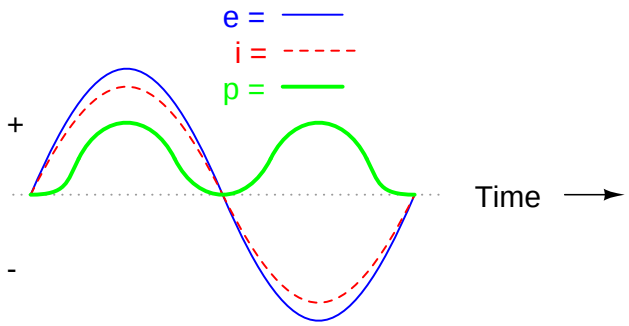

Note that the waveform for power is always positive, never negative for this resistive circuit. This means that power is always being dissipated by the resistive load, and never returned to the source as it is with reactive loads. If the source were a mechanical generator, it would take 240 watts worth of mechanical energy (about 1/3 horsepower) to turn the shaft.

Also note that the waveform for power is not at the same frequency as the voltage or current! Rather, its frequency is *double* that of either the voltage or current waveforms. This different frequency prohibits our expression of power in an AC circuit using the same complex (rectangular or polar) notation as used for voltage, current, and impedance, because this form of mathematical symbolism implies unchanging phase relationships. When frequencies are not the same, phase relationships constantly change.

As strange as it may seem, the best way to proceed with AC power calculations is to use *scalar* notation, and then handle any relevant phase relationships with trigonometry.

For comparison, let's consider a simple AC circuit with a purely reactive load:

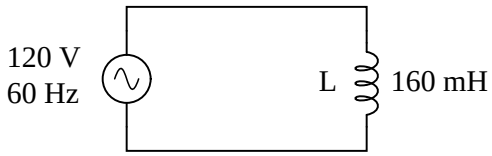

$X_L = 60.319\ \Omega$

$Z_L = 0 + j60.319\ \Omega$ *or* $60.319\ \Omega \angle 90^{o}$

$$I = \frac{E}{Z}$$

$$I = \frac{120\ V}{60.319\ \Omega}$$

$I = 1.989$ A

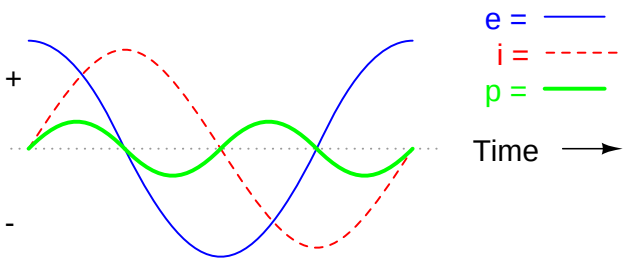

Note that how power alternates equally between cycles of positive and negative. This means that power is being alternately absorbed from and returned to the source. If the source were a mechanical generator, it would take (practically) none the mechanical energy to turn the shaft, because power would be used by the load. The generator shaft would be easy to spin, and the inductor would not become warm as a resistor would.

Now, let's consider an AC circuit with a load consisting of both inductance and resistance:

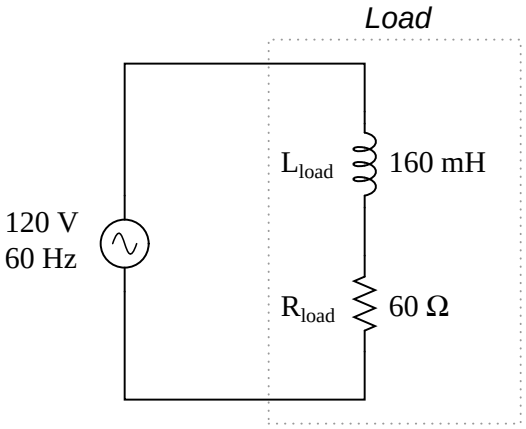

$X_L = 60.319\ \Omega$

$Z_L = 0 + j60.319\ \Omega \quad or \quad 60.319\ \Omega \angle 90^o$

$Z_R = 60 + j0\ \Omega \quad or \quad 60\ \Omega \angle 0^o$

$Z_{total} = 60 + j60.319\ \Omega \quad or \quad 85.078\ \Omega \angle 45.152^o$

$$I = \frac{E}{Z}$$

$$I = \frac{120\ V}{85.078\ \Omega}$$

$I = 1.410\ A$

At a frequency of 60 Hz, the 160 millihenrys of inductance gives us 60.319 Ω of inductive reactance. This reactance combines with the 60 Ω of resistance to form a total impedance of 60 + j60.319 Ω, or 85.078 Ω ∠ 45.152°. If we're not concerned with the phase angles (in this case we're not at this point), we may calculate current in the circuit by taking the polar magnitude of the voltage source (120 volts) and dividing it by the polar magnitude of the impedance (85.078 Ω). With a power supply voltage of 120 volts RMS, our load current is 1.410 amps. This is the figure an RMS ammeter would indicate if connected in series with the resistor and inductor.

We already know that reactive components dissipate zero power, as they cyclically absorb power from, and return power to, the rest of the circuit. Therefore, any inductive reactance in this load will likewise dissipate zero power. The only thing left to dissipate power here is the resistive portion of the load impedance. If we look at how we've found load voltage, current, and total power for this circuit, we'll see how this combination works:

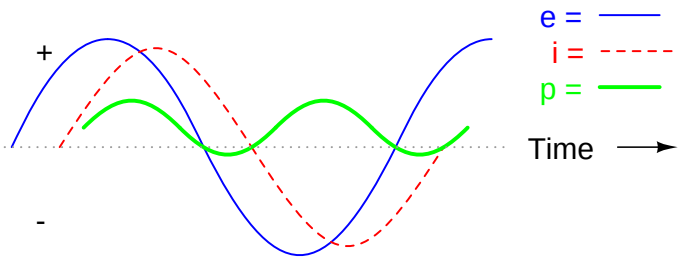

As with any reactive circuit, the power alternates between positive and negative instantaneous values over time. In a purely reactive circuit that alternation between positive and negative power is equally divided, resulting in a net power dissipation of zero. However, in circuits with mixed resistance and reactance like this one, the power waveform will still alternate between positive and negative, but the amount of positive power will exceed the amount of negative power. In other words, the combined inductive/resistive load will consume more power than it returns back to the

source.

Looking at the waveform plot for power, it should be evident that the waveform spends more time the positive side of the center line than on the negative, indicating that there is more power absorbed by the load than there is returned to the circuit. What little returning power that occurs is due to the reactance; the imbalance of positive versus negative power is due to the resistance as it dissipates energy outside of the circuit (usually in the form of heat). If the source were a mechanical generator, the amount of mechanical energy needed to turn the shaft would be the amount of power averaged between the positive and negative power cycles.

Mathematically representing power in an AC circuit is a challenge, because the power wave isn't at the same frequency as voltage or current. Furthermore, the phase angle for power means something quite different from the phase angle for either voltage or current. Whereas the angle for voltage or current represents a relative *shift in timing* between two waves, the phase angle for power represents a *ratio* between power dissipated and power returned. Because of this way in which AC power differs from AC voltage or current, it is actually easier to arrive at figures for power by calculating with *scalar* quantities of voltage, current, resistance, and reactance than it is to try to derive it from *vector*, or *complex* quantities of voltage, current, and impedance that we've worked with so far.

- **REVIEW:**
- In a purely resistive circuit, all circuit power is dissipated by the resistor(s). Voltage and current are in phase with each other.
- In a purely reactive circuit, no circuit power is dissipated by the load(s). Rather power is alternately absorbed from and returned to the AC source. Voltage and current are 90° out of phase with each other.
- In a circuit consisting of resistance and reactance mixed, there will be more power dissipated by the load(s) than returned, but some power will definitely be dissipated and will be merely be absorbed and returned. Voltage and current in such a circuit will be out of phase by a value somewhere between 0° and 90°.

11.2 True, Reactive, and Apparent power

We know that reactive loads such as inductors and capacitors dissipate zero power, yet the fact that they drop voltage and draw current gives the deceptive impression that they actually *do* dissipate power. This "phantom power" is called *reactive power*, and it is measured in a unit called *Volt-Amps-Reactive* (VAR), rather than watts. The mathematical symbol for reactive power is (unfortunately) the capital letter Q. The actual amount of power being used, or dissipated, in a circuit is called *true power*, and it is measured in watts (symbolized by the capital letter P, as always). The combination of reactive power and true power is called *apparent power*, and it is the product of a circuit's voltage and current, without reference to phase angle. Apparent power is measured in the unit of *Volt-Amps* (VA) and is symbolized by the capital letter S.

As a rule, true power is a function of a circuit's dissipative elements, usually resistances (R). Reactive power is a function of a circuit's reactance (X). Apparent power is a function of a circuit's total impedance (Z). Since we're dealing with scalar quantities for power calculation, any complex

starting quantities such as voltage, current, and impedance must be represented by their *polar magnitudes*, not by real or imaginary rectangular components. For instance, if I'm calculating true power from current and resistance, I must use the polar magnitude for current, and not merely the "real" or "imaginary" portion of the current. If I'm calculating apparent power from voltage and impedance, both of these formerly complex quantities must be reduced to their polar magnitudes for the scalar arithmetic.

There are several power equations relating the three types of power to resistance, reactance, and impedance (all using scalar quantities):

P = true power $P = I^2R$ $P = \frac{E^2}{R}$

Measured in units of ***Watts***

Q = reactive power $Q = I^2X$ $Q = \frac{E^2}{X}$

Measured in units of ***Volt-Amps-Reactive (VAR)***

S = apparent power $S = I^2Z$ $S = \frac{E^2}{Z}$ $S = IE$

Measured in units of ***Volt-Amps (VA)***

Please note that there are two equations each for the calculation of true and reactive power. There are three equations available for the calculation of apparent power, P=IE being useful *only* for that purpose. Examine the following circuits and see how these three types of power interrelate:

Resistive load only:

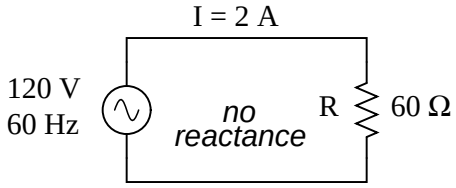

P = true power = I^2R = 240 W

Q = reactive power = I^2X = 0 VAR

S = apparent power = I^2Z = 240 VA

Reactive load only:

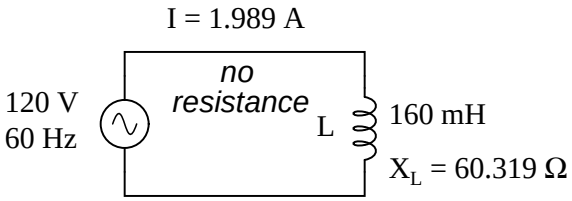

P = true power = I^2R = 0 W

Q = reactive power = I^2X = 238.73 VAR

S = apparent power = I^2Z = 238.73 VA

Resistive/reactive load:

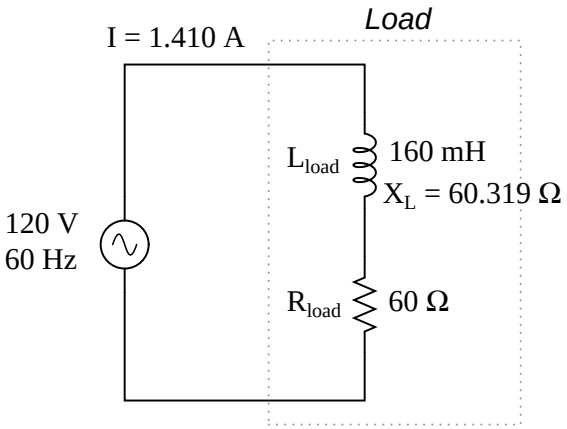

P = true power = I^2R = 119.365 W

Q = reactive power = I^2X = 119.998 VAR

S = apparent power = I^2Z = 169.256 VA

These three types of power – true, reactive, and apparent – relate to one another in trigonometric form. We call this the *power triangle*:

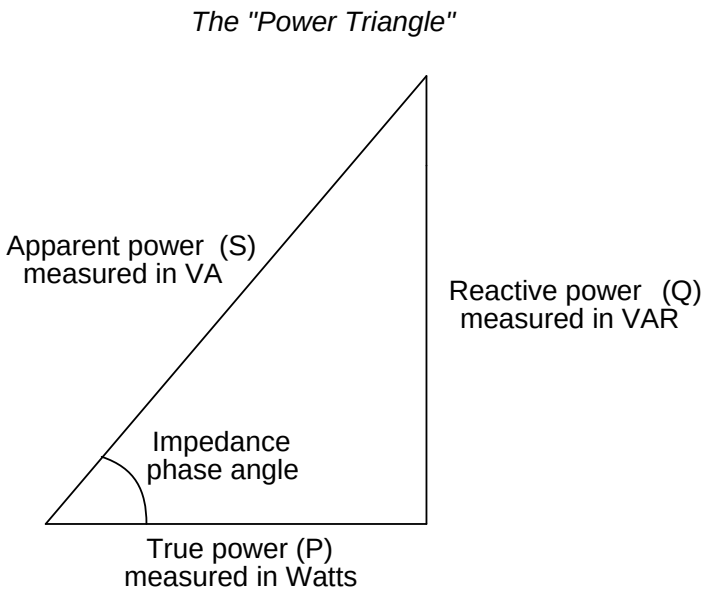

Using the laws of trigonometry, we can solve for the length of any side (amount of any type of power), given the lengths of the other two sides, or the length of one side and an angle.

- **REVIEW:**
- Power dissipated by a load is referred to as *true power*. True power is symbolized by the letter P and is measured in the unit of Watts (W).
- Power merely absorbed and returned in load due to its reactive properties is referred to as *reactive power*. Reactive power is symbolized by the letter Q and is measured in the unit of Volt-Amps-Reactive (VAR).
- Total power in an AC circuit, both dissipated and absorbed/returned is referred to as *apparent power*. Apparent power is symbolized by the letter S and is measured in the unit of Volt-Amps (VA).
- These three types of power are trigonometrically related to one another. In a right triangle, P = adjacent length, Q = opposite length, and S = hypotenuse length. The opposite angle is equal to the circuit's impedance (Z) phase angle.

11.3 Calculating power factor

As was mentioned before, the angle of this "power triangle" graphically indicates the ratio between the amount of dissipated (or *consumed*) power and the amount of absorbed/returned power. It also happens to be the same angle as that of the circuit's impedance in polar form. When expressed as a fraction, this ratio between true power and apparent power is called the *power factor* for this circuit. Because true power and apparent power form the adjacent and hypotenuse sides of a right

triangle, respectively, the power factor ratio is also equal to the cosine of that phase angle. Using values from the last example circuit:

$$\text{Power factor} = \frac{\text{True power}}{\text{Apparent power}}$$

$$\text{Power factor} = \frac{119.365 \text{ W}}{169.256 \text{ VA}}$$

$$\text{Power factor} = 0.705$$

$$\cos 45.152^{o} = 0.705$$

It should be noted that power factor, like all ratio measurements, is a *unitless* quantity.

For the purely resistive circuit, the power factor is 1 (perfect), because the reactive power equals zero. Here, the power triangle would look like a horizontal line, because the opposite (reactive power) side would have zero length.

For the purely inductive circuit, the power factor is zero, because true power equals zero. Here, the power triangle would look like a vertical line, because the adjacent (true power) side would have zero length.

The same could be said for a purely capacitive circuit. If there are no dissipative (resistive) components in the circuit, then the true power must be equal to zero, making any power in the circuit purely reactive. The power triangle for a purely capacitive circuit would again be a vertical line (pointing down instead of up as it was for the purely inductive circuit).

Power factor can be an important aspect to consider in an AC circuit, because any power factor less than 1 means that the circuit's wiring has to carry more current than what would be necessary with zero reactance in the circuit to deliver the same amount of (true) power to the resistive load. If our last example circuit had been purely resistive, we would have been able to deliver a full 169.256 watts to the load with the same 1.410 amps of current, rather than the mere 119.365 watts that it is presently dissipating with that same current quantity. The poor power factor makes for an inefficient power delivery system.

Poor power factor can be corrected, paradoxically, by adding another load to the circuit drawing an equal and opposite amount of reactive power, to cancel out the effects of the load's inductive reactance. Inductive reactance can only be canceled by capacitive reactance, so we have to add a *capacitor* in parallel to our example circuit as the additional load. The effect of these two opposing reactances in parallel is to bring the circuit's total impedance equal to its total resistance (to make the impedance phase angle equal, or at least closer, to zero).

Since we know that the (uncorrected) reactive power is 119.998 VAR (inductive), we need to calculate the correct capacitor size to produce the same quantity of (capacitive) reactive power. Since this capacitor will be directly in parallel with the source (of known voltage), we'll use the power formula which starts from voltage and reactance:

$$Q = \frac{E^2}{X}$$

. . . solving for X . . .

$$X = \frac{E^2}{Q}$$

$$X = \frac{(120\ \text{V})^2}{119.998\ \text{VAR}}$$

$$X = 120.002\ \Omega$$

$$X_C = \frac{1}{2\pi fC}$$

. . . solving for C . . .

$$C = \frac{1}{2\pi f X_C}$$

$$C = \frac{1}{2\pi(60\ \text{Hz})(120.002\ \Omega)}$$

$$C = 22.105\ \mu\text{F}$$

Let's use a rounded capacitor value of 22 μF and see what happens to our circuit:

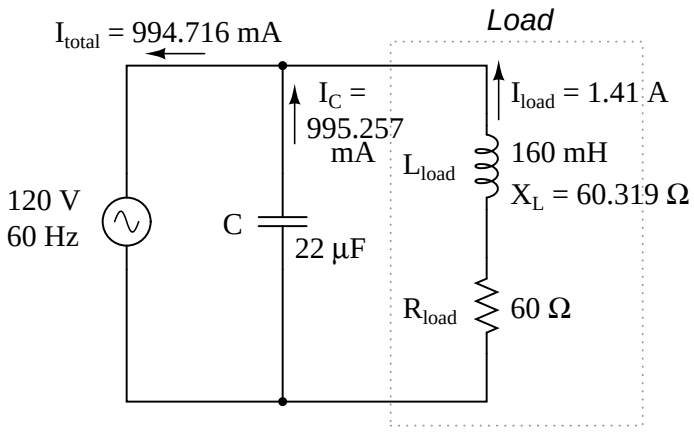

$Z_{total} = Z_C \,//\, (Z_L \text{ -- } Z_R)$

$Z_{total} = (120.57\ \Omega \angle -90^o) \,//\, (60.319\ \Omega \angle 90^o \text{ -- } 60\ \Omega \angle 0^o)$

$Z_{total} = 120.64 - j573.58m\ \Omega \quad or \quad 120.64\ \Omega \angle 0.2724^o$

P = true power = I^2R = 119.365 W

S = apparent power = I^2Z = 119.366 VA

The power factor for the circuit, overall, has been substantially improved. The main current has been decreased from 1.41 amps to 994.7 milliamps, while the power dissipated at the load resistor remains unchanged at 119.365 watts. The power factor is much closer to being 1:

$$\text{Power factor} = \frac{\text{True power}}{\text{Apparent power}}$$

$$\text{Power factor} = \frac{119.365\ \text{W}}{119.366\ \text{VA}}$$

Power factor = 0.9999887

Impedance (polar) angle = 0.272^o

$\cos 0.272^o = 0.9999887$

Since the impedance angle is still a positive number, we know that the circuit, overall, is still more inductive than it is capacitive. If our power factor correction efforts had been perfectly on-target, we would have arrived at an impedance angle of exactly zero, or purely resistive. If we had added too large of a capacitor in parallel, we would have ended up with an impedance angle that was negative, indicating that the circuit was more capacitive than inductive.

It should be noted that too much capacitance in an AC circuit will result in a low power factor just as well as too much inductance. You must be careful not to over-correct when adding capacitance to an AC circuit. You must also be *very* careful to use the proper capacitors for the job (rated adequately for power system voltages and the occasional voltage spike from lightning strikes, for continuous AC service, and capable of handling the expected levels of current).

If a circuit is predominantly inductive, we say that its power factor is *lagging* (because the current wave for the circuit lags behind the applied voltage wave). Conversely, if a circuit is predominantly capacitive, we say that its power factor is *leading*. Thus, our example circuit started out with a power factor of 0.705 lagging, and was corrected to a power factor of 0.999 lagging.

- **REVIEW:**
- Poor power factor in an AC circuit may be "corrected," or re-established at a value close to 1, by adding a parallel reactance opposite the effect of the load's reactance. If the load's

reactance is inductive in nature (which is almost always will be), parallel *capacitance* is what is needed to correct poor power factor.

11.4 Practical power factor correction

When the need arises to correct for poor power factor in an AC power system, you probably won't have the luxury of knowing the load's exact inductance in henrys to use for your calculations. You may be fortunate enough to have an instrument called a *power factor meter* to tell you what the power factor is (a number between 0 and 1), and the apparent power (which can be figured by taking a voltmeter reading in volts and multiplying by an ammeter reading in amps). In less favorable circumstances you may have to use an oscilloscope to compare voltage and current waveforms, measuring phase shift in ^{degrees} and calculating power factor by the cosine of that phase shift.

Most likely, you will have access to a wattmeter for measuring true power, whose reading you can compare against a calculation of apparent power (from multiplying total voltage and total current measurements). From the values of true and apparent power, you can determine reactive power and power factor. Let's do an example problem to see how this works:

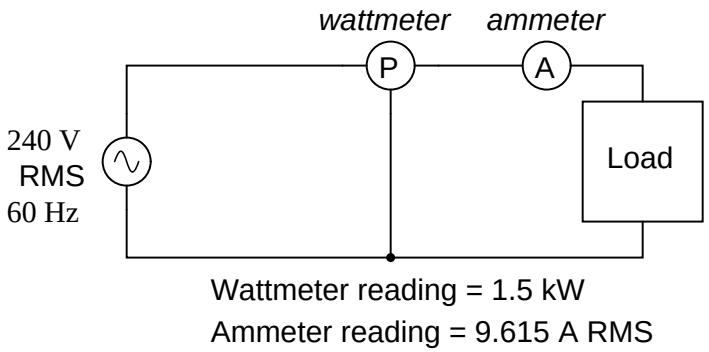

First, we need to calculate the apparent power in kVA. We can do this by multiplying load voltage by load current:

$$S = IE$$

$$S = (9.615 \text{ A})(240 \text{ V})$$

$$S = 2.308 \text{ kVA}$$

As we can see, 2.308 kVA is a much larger figure than 1.5 kW, which tells us that the power factor in this circuit is rather poor (substantially less than 1). Now, we figure the power factor of this load by dividing the true power by the apparent power:

$$\text{Power factor} = \frac{P}{S}$$

$$\text{Power factor} = \frac{1.5 \text{ kW}}{2.308 \text{ kVA}}$$

$$\text{Power factor} = 0.65$$

Using this value for power factor, we can draw a power triangle, and from that determine the reactive power of this load:

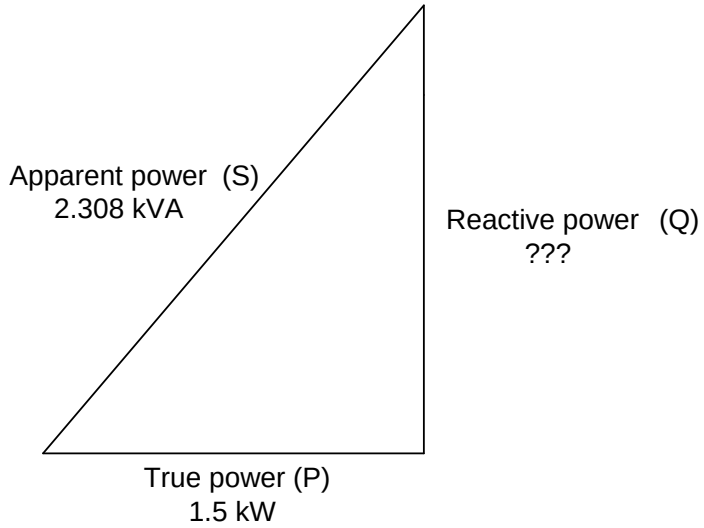

To determine the unknown (reactive power) triangle quantity, we use the Pythagorean Theorem "backwards," given the length of the hypotenuse (apparent power) and the length of the adjacent side (true power):

$$\text{Reactive power} = \sqrt{(\text{Apparent power})^2 - (\text{True power})^2}$$

$$Q = 1.754 \text{ kVAR}$$

If this load is an electric motor, or most any other industrial AC load, it will have a lagging (inductive) power factor, which means that we'll have to correct for it with a *capacitor* of appropriate size, wired in parallel. Now that we know the amount of reactive power (1.754 kVAR), we can calculate the size of capacitor needed to counteract its effects:

$$Q = \frac{E^2}{X}$$

. . . solving for X . . .

$$X = \frac{E^2}{Q}$$

$$X = \frac{(240)^2}{1.754 \text{ kVAR}}$$

$$X = 32.845\ \Omega$$

$$X_C = \frac{1}{2\pi fC}$$

. . . solving for C . . .

$$C = \frac{1}{2\pi f X_C}$$

$$C = \frac{1}{2\pi(60 \text{ Hz})(32.845\ \Omega)}$$

$$C = 80.761\ \mu\text{F}$$

Rounding this answer off to 80 μF, we can place that size of capacitor in the circuit and calculate the results:

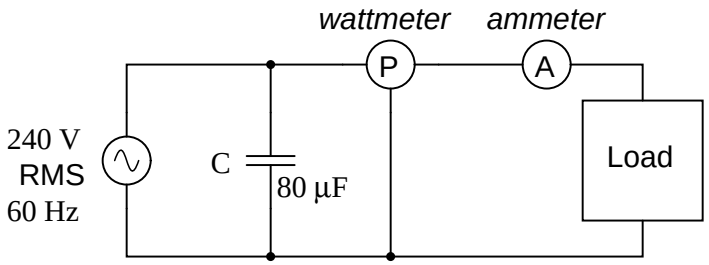

An 80 μF capacitor will have a capacitive reactance of 33.157 Ω, giving a current of 7.238 amps, and a corresponding reactive power of 1.737 kVAR (for the capacitor *only*). Since the capacitor's current is 180° out of phase from the the load's inductive contribution to current draw, the capacitor's reactive power will directly subtract from the load's reactive power, resulting in:

Inductive kVAR - Capacitive kVAR = Total kVAR

1.754 kVAR - 1.737 kVAR = 16.519 VAR

This correction, of course, will not change the amount of true power consumed by the load, but it will result in a substantial reduction of apparent power, and of the total current drawn from the 240 Volt source:

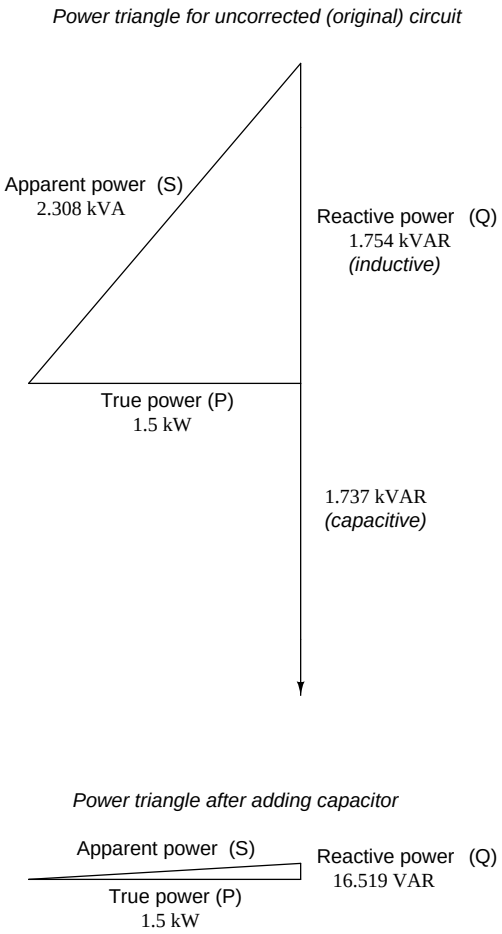

The new apparent power can be found from the true and new reactive power values, using the standard form of the Pythagorean Theorem:

$$\text{Apparent power} = \sqrt{(\text{Reactive power})^2 + (\text{True power})^2}$$

$$\text{Apparent power} = 1.50009 \text{ kVA}$$

This gives a corrected power factor of (1.5kW / 1.5009 kVA), or 0.99994, and a new total current of (1.50009 kVA / 240 Volts), or 6.25 amps, a substantial improvement over the uncorrected value of 9.615 amps! This lower total current will translate to less heat losses in the circuit wiring, meaning greater system efficiency (less power wasted).

Chapter 12

AC METERING CIRCUITS

12.1 AC voltmeters and ammeters

AC electromechanical meter movements come in two basic arrangements: those based on DC movement designs, and those engineered specifically for AC use. The basic permanent-magnet meter movement explored in the DC meter chapter of this book will not work correctly if directly connected to alternating current, because the direction of needle movement will change with each half-cycle of the AC. Permanent-magnet meter movements, like permanent-magnet motors, are devices whose motion depends on the polarity of the applied voltage (or, you can think of it in terms of the direction of the current).

D'Arsonval electromechanical meter movement

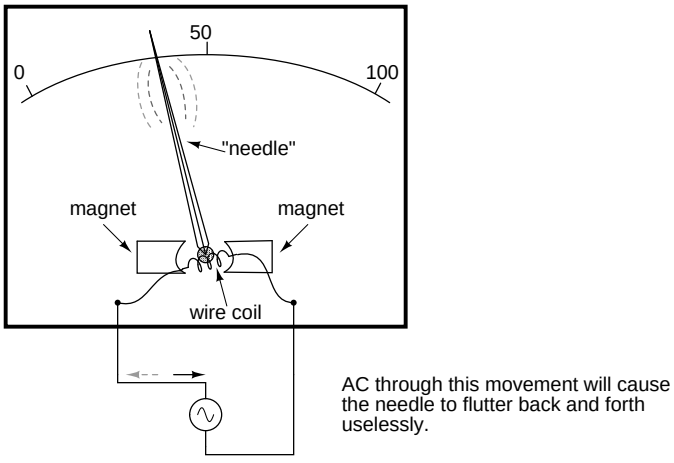

In order to use a DC-style meter movement such as the D'Arsonval design, the alternating current must be *rectified* into DC. This is most easily accomplished through the use of devices called *diodes*. We saw diodes used in an example circuit demonstrating the creation of harmonic frequencies from a distorted (or rectified) sine wave. Without going into elaborate detail over how and why diodes work as they do, just remember that they each act like a one-way valve for electrons to flow: acting

as a conductor for one polarity and an insulator for another. Oddly enough, the arrowhead in each diode symbol points *against* the permitted direction of electron flow rather than with it as one might expect. Arranged in a bridge, four diodes will serve to steer AC through the meter movement in a constant direction throughout all portions of the AC cycle:

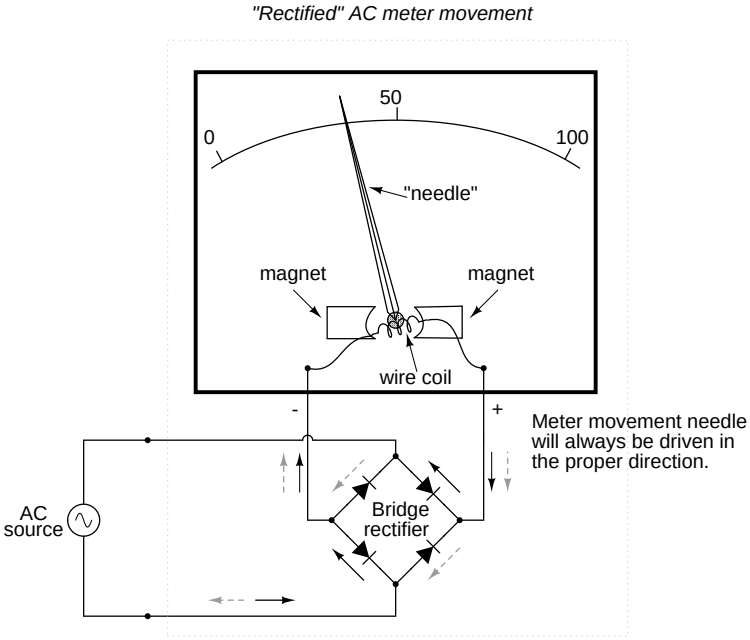

Another strategy for a practical AC meter movement is to redesign the movement without the inherent polarity sensitivity of the DC types. This means avoiding the use of permanent magnets. Probably the simplest design is to use a nonmagnetized iron vane to move the needle against spring tension, the vane being attracted toward a stationary coil of wire energized by the AC quantity to be measured.

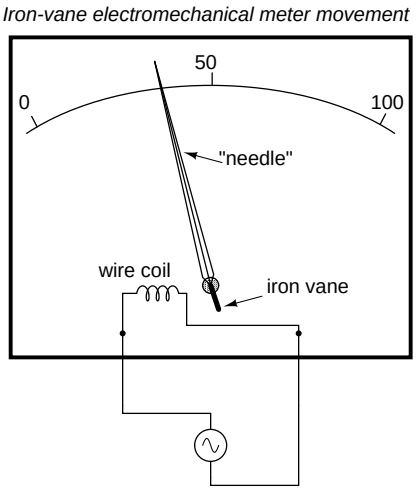

As mentioned before in this book, the electrostatic attraction between two metal plates separated by an air gap can be used to generate a needle-moving force proportional to the voltage between the plates. This works just as well for AC as it does for DC, or should I say, just as poorly! The forces involved are very small, much smaller than the magnetic attraction between an energized coil and an iron vane, and as such these "electrostatic" meter movements tend to be fragile and easily disturbed by physical movement. But, for some high-voltage AC applications, the electrostatic movement is an elegant technology.

The Cathode Ray Tube (CRT) mentioned in the DC metering chapter is ideally suited for measuring AC voltages, especially if the electron beam is swept side-to-side across the screen of the tube while the measured AC voltage drives the beam up and down. A graphical representation of the AC wave shape and not just a measurement of magnitude can easily be had with such a device. However, CRT's have the disadvantages of weight, size, significant power consumption, and fragility (being made of evacuated glass) working against them. For these reasons, electromechanical AC meter movements still have a place in practical usage.

With some of the advantages and disadvantages of these meter movement technologies having been discussed already, there is another factor crucially important for the designer and user of AC metering instruments to be aware of. This is the issue of RMS measurement. As we already know, AC measurements are often cast in a scale of DC power equivalence, called *RMS* (**R**oot-**M**ean-**S**quare) for the sake of meaningful comparisons with DC and with other AC waveforms of varying shape. None of the meter movement technologies so far discussed inherently measure the RMS value of an AC quantity. Meter movements relying on the motion of a mechanical needle ("rectified" D'Arsonval, iron-vane, and electrostatic) all tend to mechanically average the instantaneous values into an overall average value for the waveform. This average value is not necessarily the same as RMS, although many times it is mistaken as such. Average and RMS values rate against each other as such for these three common waveform shapes:

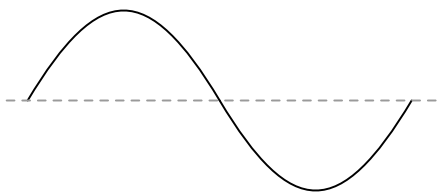

RMS = 0.707 (Peak)
AVG = 0.637 (Peak)
P-P = 2 (Peak)

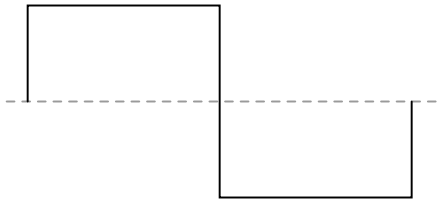

RMS = Peak
AVG = Peak
P-P = 2 (Peak)

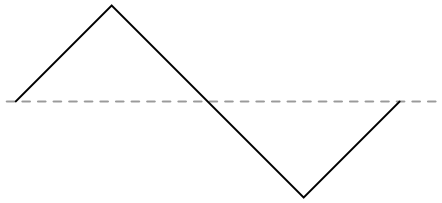

RMS = 0.577 (Peak)
AVG = 0.5 (Peak)
P-P = 2 (Peak)

Since RMS seems to be the kind of measurement most people are interested in obtaining with an instrument, and electromechanical meter movements naturally deliver *average* measurements rather than RMS, what are AC meter designers to do? Cheat, of course! Typically the assumption is made that the waveform shape to be measured is going to be sine (by far the most common, especially for power systems), and then the meter movement scale is altered by the appropriate multiplication factor. For sine waves we see that RMS is equal to 0.707 times the peak value while Average is 0.637 times the peak, so we can divide one figure by the other to obtain an average-to-RMS conversion factor of 1.109:

$$\frac{0.707}{0.637} = 1.1099$$

In other words, the meter movement will be calibrated to indicate approximately 1.11 times higher than it would ordinarily (naturally) indicate with no special accommodations. It must be stressed that this "cheat" only works well when the meter is used to measure pure sine wave sources. Note that for triangle waves, the ratio between RMS and Average is not the same as for sine waves:

$$\frac{0.577}{0.5} = 1.154$$

With square waves, the RMS and Average values are identical! An AC meter calibrated to accurately read RMS voltage or current on a pure sine wave will *not* give the proper value while indicating the magnitude of anything other than a perfect sine wave. This includes triangle waves, square waves, or any kind of distorted sine wave. With harmonics becoming an ever-present phenomenon in large AC power systems, this matter of accurate RMS measurement is no small matter.

The astute reader will note that I have omitted the CRT "movement" from the RMS/Average discussion. This is because a CRT with its practically weightless electron beam "movement" displays the Peak (or Peak-to-Peak if you wish) of an AC waveform rather than Average or RMS. Still, a similar problem arises: how do you determine the RMS value of a waveform from it? Conversion factors between Peak and RMS only hold so long as the waveform falls neatly into a known category of shape (sine, triangle, and square are the only examples with Peak/RMS/Average conversion factors given here!).

One answer is to design the meter movement around the very definition of RMS: the effective heating value of an AC voltage/current as it powers a resistive load. Suppose that the AC source to be measured is connected across a resistor of known value, and the heat output of that resistor is measured with a device like a thermocouple. This would provide a far more direct measurement means of RMS than any conversion factor could, for it will work with ANY waveform shape whatsoever:

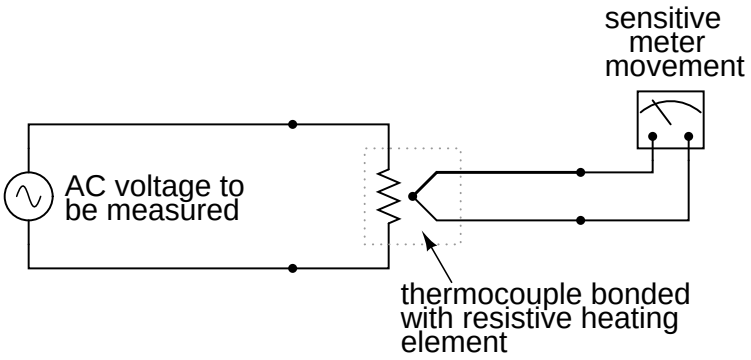

While the device shown above is somewhat crude and would suffer from unique engineering problems of its own, the concept illustrated is very sound. The resistor converts the AC voltage or current quantity into a thermal (heat) quantity, effectively squaring the values in real-time. The system's mass works to average these values by the principle of thermal inertia, and then the meter scale itself is calibrated to give an indication based on the square-root of the thermal measurement: perfect Root-Mean-Square indication all in one device! In fact, one major instrument manufacturer has implemented this technique into its high-end line of handheld electronic multimeters for "true-RMS" capability.

Calibrating AC voltmeters and ammeters for different full-scale ranges of operation is much the same as with DC instruments: series "multiplier" resistors are used to give voltmeter movements higher range, and parallel "shunt" resistors are used to allow ammeter movements to measure currents beyond their natural range. However, we are not limited to these techniques as we were with DC: because we can to use transformers with AC, meter ranges can be electromagnetically rather than resistively "stepped up" or "stepped down," sometimes far beyond what resistors would have practically allowed for. Potential Transformers (PT's) and Current Transformers (CT's) are precision instrument devices manufactured to produce very precise ratios of transformation between primary and secondary windings. They can allow small, simple AC meter movements to indicate extremely high voltages and currents in power systems with accuracy and complete electrical isolation (something multiplier and shunt resistors could never do):

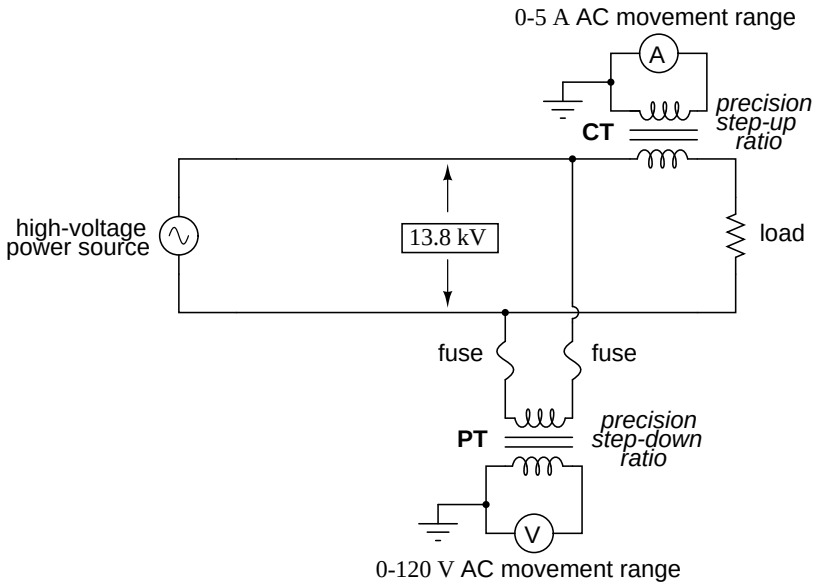

Because of the size and expense of instrument transformers, they are not used to scale AC meters for any applications other than high voltage and high current. For scaling a milliamp or microamp movement to a range of 120 volts or 5 amps, normal precision resistors (multipliers and shunts) are used, just as with DC.

- **REVIEW:**
- Polarized (DC) meter movements must use devices called *diodes* to be able to indicate AC quantities.
- Electromechanical meter movements, whether electromagnetic or electrostatic, naturally provide the *average* value of a measured AC quantity. These instruments may be ranged to indicate RMS value, but only if the shape of the AC waveform is precisely known beforehand!
- So-called *true RMS* meters use different technology to provide indications representing the actual RMS (rather than skewed average or peak) of an AC waveform.

12.2 Frequency and phase measurement

An important electrical quantity with no equivalent in DC circuits is *frequency*. Frequency measurement is very important in many applications of alternating current, especially in AC power systems designed to run efficiently at one frequency and one frequency only. If the AC is being generated by an electromechanical alternator, the frequency will be directly proportional to the shaft speed of the machine, and frequency could be measured simply by measuring the speed of the shaft. If frequency needs to be measured at some distance from the alternator, though, other means of measurement will be necessary.

One simple but crude method of frequency measurement in power systems utilizes the principle of mechanical resonance. Every physical object possessing the property of elasticity (springiness)

has an inherent frequency at which it will prefer to vibrate. The tuning fork is a great example of this: strike it once and it will continue to vibrate at a tone specific to its length. Longer tuning forks have lower resonant frequencies: their tones will be lower on the musical scale than shorter forks.

Imagine a row of progressively-sized tuning forks arranged side-by-side. They are all mounted on a common base, and that base is vibrated at the frequency of the measured AC voltage (or current) by means of an electromagnet. Whichever tuning fork is closest in resonant frequency to the frequency of that vibration will tend to shake the most (or the loudest). If the forks' tines were flimsy enough, we could see the relative motion of each by the length of the blur we would see as we inspected each one from an end-view perspective. Well, make a collection of "tuning forks" out of a strip of sheet metal cut in a pattern akin to a rake, and you have the *vibrating reed* frequency meter:

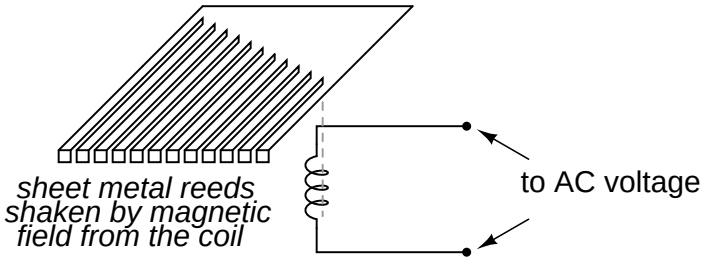

The user of this meter views the ends of all those unequal length reeds as they are collectively shaken at the frequency of the applied AC voltage to the coil. The one closest in resonant frequency to the applied AC will vibrate the most, looking something like this:

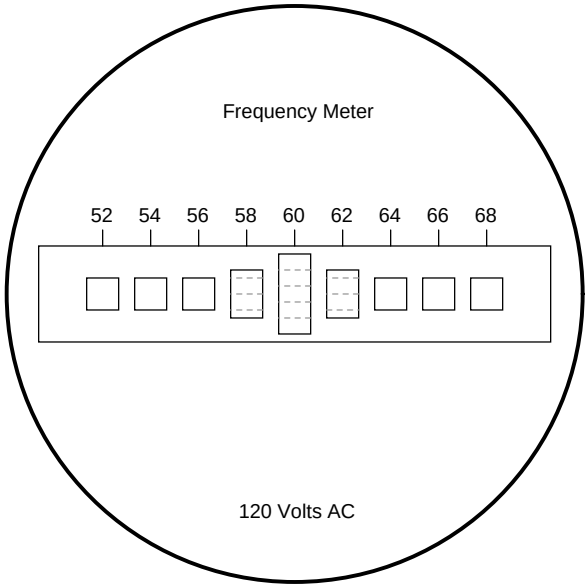

Vibrating reed meters, obviously, are not precision instruments, but they are very simple and therefore easy to manufacture to be rugged. They are often found on small engine-driven generator sets for the purpose of setting engine speed so that the frequency is somewhat close to 60 (50 in

Europe) Hertz.

While reed-type meters are imprecise, their operational principle is not. In lieu of mechanical resonance, we may substitute electrical resonance and design a frequency meter using an inductor and capacitor in the form of a tank circuit (parallel inductor and capacitor). One or both components are made adjustable, and a meter is placed in the circuit to indicate maximum amplitude of voltage across the two components. The adjustment knob(s) are calibrated to show resonant frequency for any given setting, and the frequency is read from them after the device has been adjusted for maximum indication on the meter. Essentially, this is a tunable filter circuit which is adjusted and then read in a manner similar to a bridge circuit (which must be balanced for a "null" condition and then read).

Resonant Frequency Meter

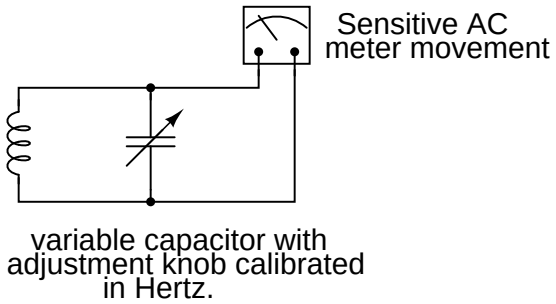

This technique is a popular one for amateur radio operators (or at least it was before the advent of inexpensive digital frequency instruments called *counters*), especially because it doesn't require direct connection to the circuit. So long as the inductor and/or capacitor can intercept enough stray field (magnetic or electric, respectively) from the circuit under test to cause the meter to indicate, it will work.

In frequency as in other types of electrical measurement, the most accurate means of measurement are usually those where an unknown quantity is compared against a known *standard*, the basic instrument doing nothing more than indicating when the two quantities are equal to each other. This is the basic principle behind the DC (Wheatstone) bridge circuit and it is a sound metrological principle applied throughout the sciences. If we have access to an accurate frequency standard (a source of AC voltage holding very precisely to a single frequency), then measurement of any unknown frequency by comparison should be relatively easy.

For that frequency standard, we turn our attention back to the tuning fork, or at least a more modern variation of it called the *quartz crystal*. Quartz is a naturally occurring mineral possessing a very interesting property called *piezoelectricity*. Piezoelectric materials produce a voltage across their length when physically stressed, and will physically deform when an external voltage is applied across their lengths. This deformation is very, very slight in most cases, but it does exist.

Quartz rock is elastic (springy) within that small range of bending which an external voltage would produce, which means that it will have a mechanical resonant frequency of its own capable of being manifested as an electrical voltage signal. In other words, if a chip of quartz is struck, it will "ring" with its own unique frequency determined by the length of the chip, and that resonant oscillation will produce an equivalent voltage across multiple points of the quartz chip which can be tapped into by wires fixed to the surface of the chip. In reciprocal manner, the quartz chip will tend

to vibrate most when it is "excited" by an applied AC voltage at precisely the right frequency, just like the reeds on a vibrating-reed frequency meter.

Chips of quartz rock can be precisely cut for desired resonant frequencies, and that chip mounted securely inside a protective shell with wires extending for connection to an external electric circuit. When packaged as such, the resulting device is simply called a *crystal* (or sometimes "*xtal*"), and its schematic symbol looks like this:

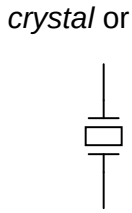

Electrically, that quartz chip is equivalent to a series LC resonant circuit. The dielectric properties of quartz contribute an additional capacitive element to the equivalent circuit, and in the end it looks something like this:

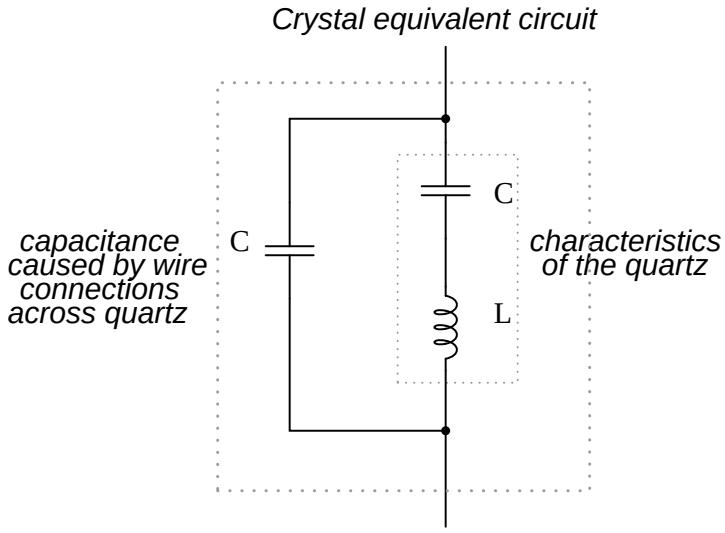

The "capacitance" and "inductance" shown in series are merely electrical equivalents of the quartz's mechanical resonance properties: they do not exist as discrete components within the crystal. The capacitance shown in parallel due to the wire connections across the dielectric (insulating) quartz body is real, and it has an effect on the resonant response of the whole system. A full discussion on crystal dynamics is not necessary here, but what needs to be understood about crystals is this resonant circuit equivalence and how it can be exploited within an oscillator circuit to achieve an output voltage with a stable, known frequency.

Crystals, as resonant elements, typically have much higher "Q" (*quality*) values than tank circuits built from inductors and capacitors, principally due to the relative absence of stray resistance, making their resonant frequencies very definite and precise. Because the resonant frequency is solely dependent on the physical properties of quartz (a very stable substance, mechanically), the resonant

frequency variation over time with a quartz crystal is very, very low. This is how *quartz movement* watches obtain their high accuracy: by means of an electronic oscillator stabilized by the resonant action of a quartz crystal.

For laboratory applications, though, even greater frequency stability may be desired. To achieve this, the crystal in question may be placed in a temperature stabilized environment (usually an oven), thus eliminating frequency errors due to thermal expansion and contraction of the quartz.

For the ultimate in a frequency standard though, nothing discovered thus far surpasses the accuracy of a single resonating atom. This is the principle of the so-called *atomic clock*, which uses an atom of mercury (or cesium) suspended in a vacuum, excited by outside energy to resonate at its own unique frequency. The resulting frequency is detected as a radio-wave signal and that forms the basis for the most accurate clocks known to humanity. National standards laboratories around the world maintain a few of these hyper-accurate clocks, and broadcast frequency signals based on those atoms' vibrations for scientists and technicians to tune in and use for frequency calibration purposes.

Now we get to the practical part: once we have a *source* of accurate frequency, how do we compare that against an unknown frequency to obtain a measurement? One way is to use a CRT as a frequency-comparison device. Cathode Ray Tubes typically have means of deflecting the electron beam in the horizontal as well as the vertical axis. If metal plates are used to electrostatically deflect the electrons, there will be a pair of plates to the left and right of the beam as well as a pair of plates above and below the beam.

CRT with horizontal and vertical deflection plates

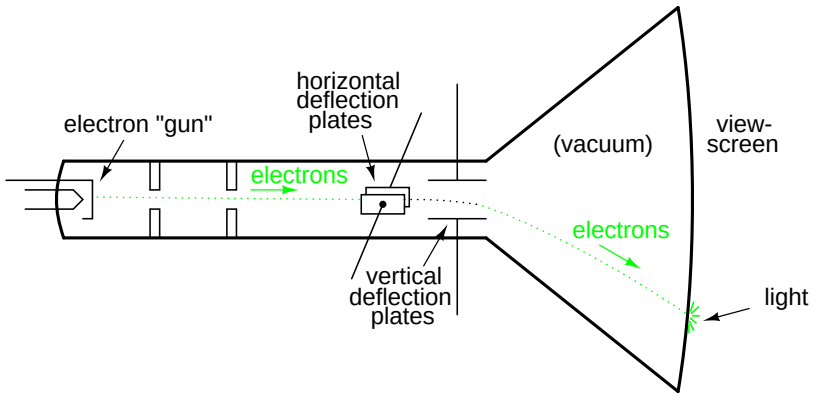

If we allow one AC signal to deflect the beam up and down (connect that AC voltage source to the "vertical" deflection plates) and another AC signal to deflect the beam left and right (using the other pair of deflection plates), patterns will be produced on the screen of the CRT indicative of the *ratio* of these two AC frequencies. These patterns are called *Lissajous figures* and are a common means of comparative frequency measurement in electronics.

If the two frequencies are the same, we will obtain a simple figure on the screen of the CRT, the shape of that figure being dependent upon the phase shift between the two AC signals. Here is a sampling of Lissajous figures for two sine-wave signals of equal frequency, shown as they would appear on the face of an oscilloscope (an AC voltage-measuring instrument using a CRT as its "movement"). The first picture is of the Lissajous figure formed by two AC voltages perfectly in phase with each other:

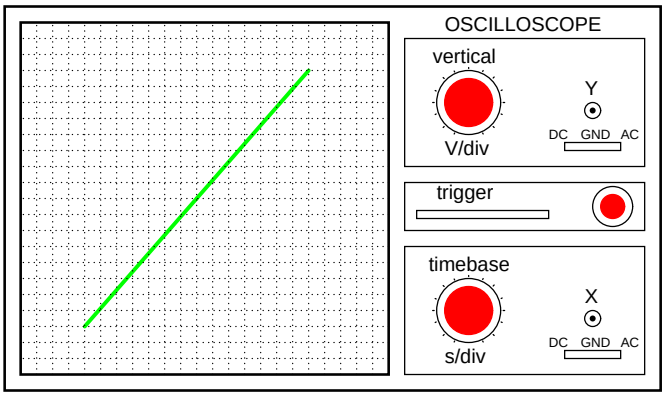

Lissajous figure: same frequency, 0 degrees phase shift

If the two AC voltages are not in phase with each other, a straight line will not be formed. Rather, the Lissajous figure will take on the appearance of an oval, becoming perfectly circular if the phase shift is exactly 90° between the two signals, and if their amplitudes are equal:

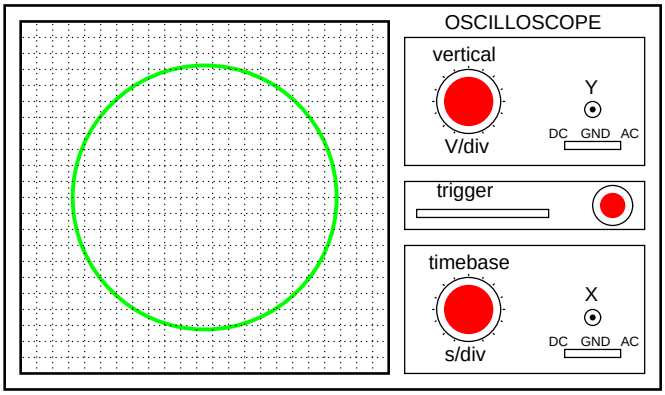

Lissajous figure: same frequency, 90 or 270 degrees phase shift

Finally, if the two AC signals are directly opposing one another in phase (180° shift), we will end up with a line again, only this time it will be oriented in the opposite direction:

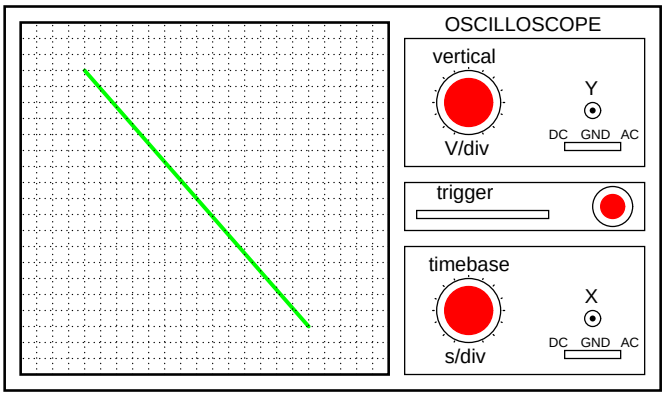

Lissajous figure: same frequency, 180 degrees phase shift

When we are faced with signal frequencies that are not the same, Lissajous figures get quite a bit more complex. Consider the following examples and their given vertical/horizontal frequency ratios:

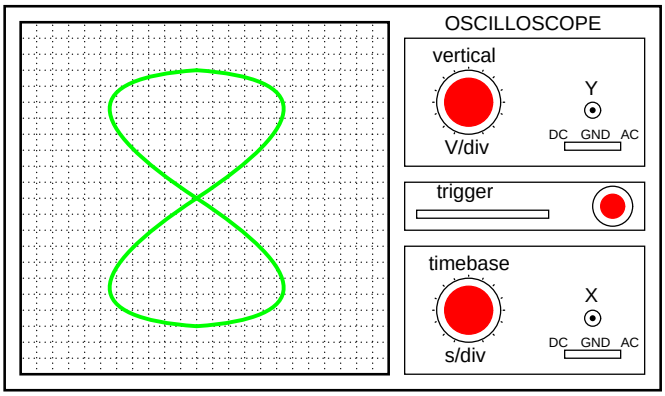

Lissajous figure: Horizontal frequency is twice that of vertical

The more complex the ratio between horizontal and vertical frequencies, the more complex the Lissajous figure. Consider the following illustration of a 3:1 frequency ratio between horizontal and vertical:

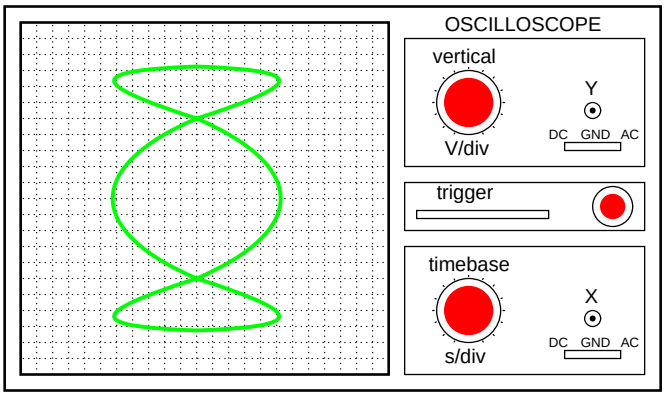

Lissajous figure: Horizontal frequency is three times that of vertical

. . . and a 3:2 frequency ratio (horizontal = 3, vertical = 2):

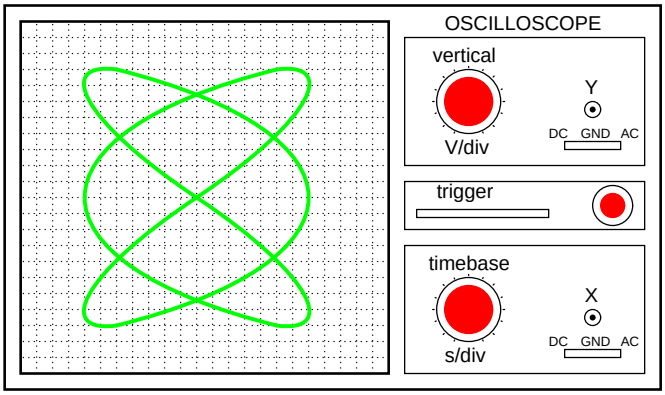

Lissajous figure: Horizontal/Vertical frequency ratio is 3:2

In cases where the frequencies of the two AC signals are not exactly a simple ratio of each other (but close), the Lissajous figure will appear to "move," slowly changing orientation as the phase angle between the two waveforms rolls between 0° and 180°. If the two frequencies are locked in an exact integer ratio between each other, the Lissajous figure will be stable on the viewscreen of the CRT.

The physics of Lissajous figures limits their usefulness as a frequency-comparison technique to cases where the frequency ratios are simple integer values (1:1, 1:2, 1:3, 2:3, 3:4, etc.). Despite this limitation, Lissajous figures are a popular means of frequency comparison wherever an accessible frequency standard (signal generator) exists.

- **REVIEW:**
- Some frequency meters work on the principle of mechanical resonance, indicating frequency by relative oscillation among a set of uniquely tuned "reeds" shaken at the measured frequency.
- Other frequency meters use electric resonant circuits (LC tank circuits, usually) to indicate frequency. One or both components is made to be adjustable, with an accurately calibrated

adjustment knob, and a sensitive meter is read for maximum voltage or current at the point of resonance.

- Frequency can be measured in a comparative fashion, as is the case when using a CRT to generate *Lissajous figures*. Reference frequency signals can be made with a high degree of accuracy by oscillator circuits using quartz crystals as resonant devices. For ultra precision, atomic clock signal standards (based on the resonant frequencies of individual atoms) can be used.

12.3 Power measurement

Power measurement in AC circuits can be quite a bit more complex than with DC circuits for the simple reason that phase shift makes complicates the matter beyond multiplying voltage by current figures obtained with meters. What is needed is an instrument able to determine the product (multiplication) of *instantaneous* voltage and current. Fortunately, the common electrodynamometer movement with its stationary and moving coil does a fine job of this.

Three phase power measurement can be accomplished using two dynamometer movements with a common shaft linking the two moving coils together so that a single pointer registers power on a meter movement scale. This, obviously, makes for a rather expensive and complex movement mechanism, but it is a workable solution.

An ingenious method of deriving an electronic power meter (one that generates an electric signal representing power in the system rather than merely move a pointer) is based on the Hall effect. The Hall effect is an unusual effect first noticed by E. H. Hall in 1879, whereby a voltage is generated along the width of a current-carrying conductor exposed to a perpendicular magnetic field:

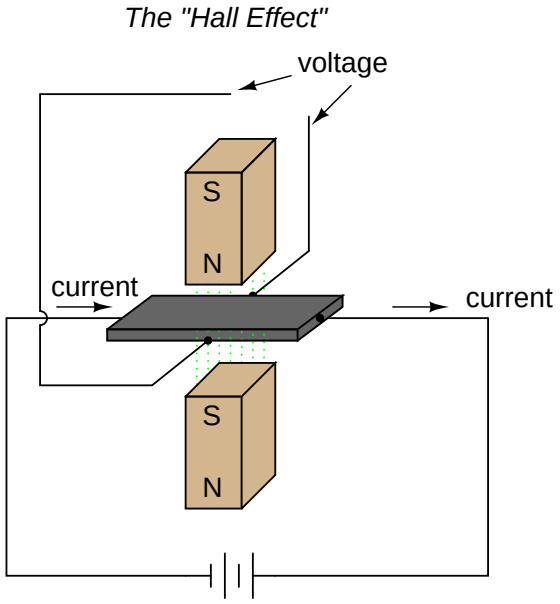

The voltage generated across the width of the flat, rectangular conductor is directly proportional to both the magnitude of the current through it and the strength of the magnetic field. Mathemati-

cally, it is a product (multiplication) of these two variables. The amount of "Hall Voltage" produced for any given set of conditions also depends on the type of material used for the flat, rectangular conductor. It has been found that specially prepared "semiconductor" materials produce a greater Hall voltage than do metals, and so modern Hall Effect devices are made of these.

It makes sense then that if we were to build a device using a Hall-effect sensor where the current through the conductor was pushed by AC voltage from an external circuit and the magnetic field was set up by a pair or wire coils energized by the current of the AC power circuit, the Hall voltage would be in direct proportion to the multiple of circuit current and voltage. Having no mass to move (unlike an electromechanical movement), this device is able to provide *instantaneous* power measurement:

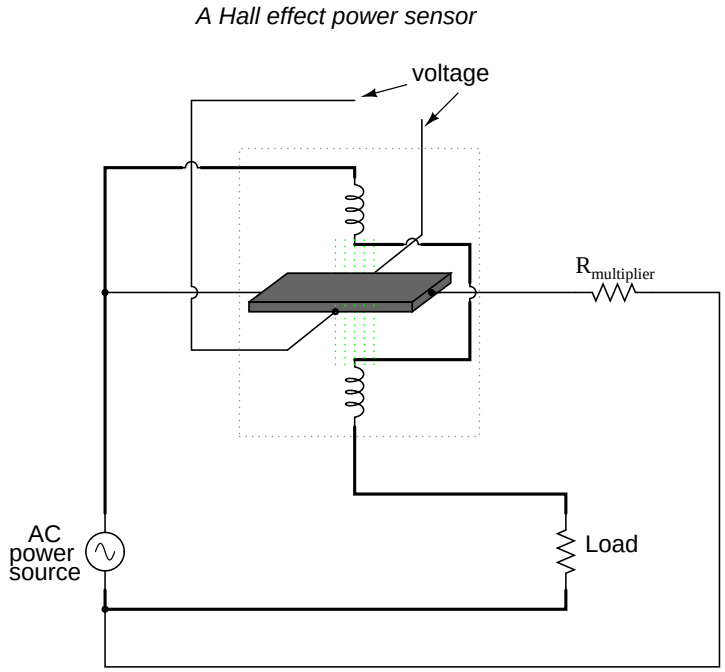

Not only will the output voltage of the Hall effect device be the representation of instantaneous power at any point in time, but it will also be a DC signal! This is because the Hall voltage polarity is dependent upon *both* the polarity of the magnetic field and the direction of current through the conductor. If both current direction and magnetic field polarity reverses – as it would ever half-cycle of the AC power – the output voltage polarity will stay the same.

If voltage and current in the power circuit are 90° out of phase (a power factor of zero, meaning *no* real power delivered to the load), the alternate peaks of Hall device current and magnetic field will never coincide with each other: when one is at its peak, the other will be zero. At those points in time, the Hall output voltage will likewise be zero, being the product (multiplication) of current and magnetic field strength. Between those points in time, the Hall output voltage will fluctuate equally between positive and negative, generating a signal corresponding to the instantaneous absorption and release of power through the reactive load. The net DC output voltage will be zero, indicating zero true power in the circuit.

Any phase shift between voltage and current in the power circuit less than 90° will result in

a Hall output voltage that oscillates between positive and negative, but spends more time positive than negative. Consequently there will be a net DC output voltage. Conditioned through a low-pass filter circuit, this net DC voltage can be separated from the AC mixed with it, the final output signal registered on a sensitive DC meter movement.

Often it is useful to have a meter to totalize power usage over a period of time rather than instantaneously. The output of such a meter can be set in units of Joules, or total energy consumed, since *power* is a measure of work being done *per* unit time. Or, more commonly, the output of the meter can be set in units of Watt-Hours.

Mechanical means for measuring Watt-Hours are usually centered around the concept of the motor: build an AC motor that spins at a rate of speed proportional to the instantaneous power in a circuit, then have that motor turn an "odometer" style counting mechanism to keep a running total of energy consumed. The "motor" used in these meters has a rotor made of a thin aluminum disk, with the rotating magnetic field established by sets of coils energized by line voltage and load current so that the rotational speed of the disk is dependent on both voltage and current.

12.4 Power quality measurement

It used to be with large AC power systems that "power quality" was an unheard-of concept, aside from power factor. Almost all loads were of the "linear" variety, meaning that they did not distort the shape of the voltage sine wave, or cause non-sinusoidal currents to flow in the circuit. This is not true anymore. Loads controlled by "nonlinear" electronic components are becoming more prevalent in both home and industry, meaning that the voltages and currents in the power system(s) feeding these loads are rich in harmonics: what should be nice, clean sine-wave voltages and currents are becoming highly distorted, which is equivalent to the presence of an infinite series of high-frequency sine waves at multiples of the fundamental power line frequency.

Excessive harmonics in an AC power system can overheat transformers, cause exceedingly high neutral conductor currents in three-phase systems, create electromagnetic "noise" in the form of radio emissions that can interfere with sensitive electronic equipment, reduce electric motor horsepower output, and can be difficult to pinpoint. With problems like these plaguing power systems, engineers and technicians require ways to precisely detect and measure these conditions.

Power Quality is the general term given to represent an AC power system's freedom from harmonic content. A "power quality" meter is one that gives some form of harmonic content indication.

A simple way for a technician to determine power quality in their system without sophisticated equipment is to compare voltage readings between two accurate voltmeters measuring the same system voltage: one meter being an "averaging" type of unit (such as an electromechanical movement meter) and the other being a "true-RMS" type of unit (such as a high-quality digital meter). Remember that "averaging" type meters are calibrated so that their scales indicate volts RMS, *based on the assumption that the AC voltage being measured is sinusoidal.* If the voltage is anything but sinewave-shaped, the averaging meter will *not* register the proper value, whereas the true-RMS meter always will, regardless of waveshape. The rule of thumb here is this: the greater the disparity between the two meters, the worse the power quality is, and the greater its harmonic content. A power system with good quality power should generate equal voltage readings between the two meters, to within the rated error tolerance of the two instruments.

Another qualitative measurement of power quality is the oscilloscope test: connect an oscilloscope (CRT) to the AC voltage and observe the shape of the wave. Anything other than a clean sine wave

could be an indication of trouble:

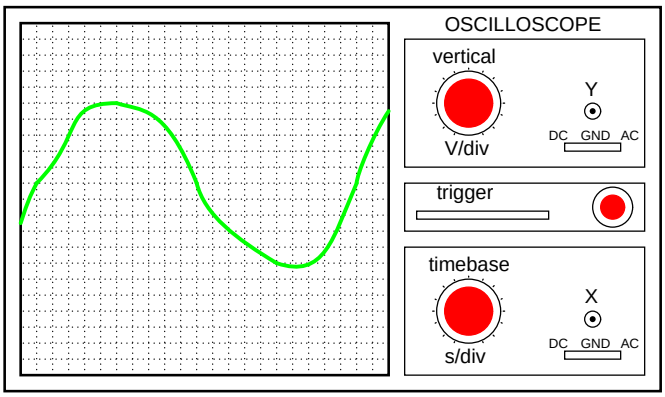

This is a moderately ugly "sine" wave. Definite harmonic content here!

Still, if quantitative analysis (definite, numerical figures) is necessary, there is no substitute for an instrument specifically designed for that purpose. Such an instrument is called a *power quality meter* and is sometimes better known in electronic circles as a low-frequency *spectrum analyzer*. What this instrument does is provide a graphical representation on a CRT or digital display screen of the AC voltage's frequency "spectrum." Just as a prism splits a beam of white light into its constituent color components (how much red, orange, yellow, green, and blue is in that light), the spectrum analyzer splits a mixed-frequency signal into its constituent frequencies, and displays the result in the form of a histogram:

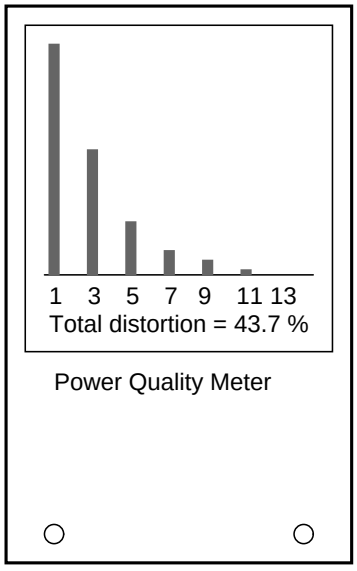

Each number on the horizontal scale of this meter represents a harmonic of the fundamental frequency. For American power systems, the "1" represents 60 Hz (the 1st harmonic, or *fundamental*), the "3" for 180 Hz (the 3rd harmonic), the "5" for 300 Hz (the 5th harmonic), and so on. The black rectangles represent the relative magnitudes of each of these harmonic components in the measured

AC voltage. A pure, 60 Hz sine wave would show only a tall black bar over the "1" with no black bars showing at all over the other frequency markers on the scale, because a pure sine wave has no harmonic content.

Power quality meters such as this might be better referred to as *overtone* meters, because they are designed to display only those frequencies known to be generated by the power system. In three-phase AC power systems (predominant for large power applications), even-numbered harmonics tend to be canceled out, and so only harmonics existing in significant measure are the odd-numbered.

Meters like these are very useful in the hands of a skilled technician, because different types of nonlinear loads tend to generate different spectrum "signatures" which can clue the troubleshooter to the source of the problem. These meters work by very quickly sampling the AC voltage at many different points along the waveform shape, digitizing those points of information, and using a microprocessor (small computer) to perform numerical Fourier analysis (the *Fast Fourier Transform* or "*FFT*" algorithm) on those data points to arrive at harmonic frequency magnitudes. The process is not much unlike what the SPICE program tells a computer to do when performing a Fourier analysis on a simulated circuit voltage or current waveform.

12.5 AC bridge circuits

As we saw with DC measurement circuits, the circuit configuration known as a *bridge* can be a very useful way to measure unknown values of resistance. This is true with AC as well, and we can apply the very same principle to the accurate measurement of unknown impedances.

To review, the bridge circuit works as a pair of two-component voltage dividers connected across the same source voltage, with a *null-detector* meter movement connected between them to indicate a condition of "balance" at zero volts:

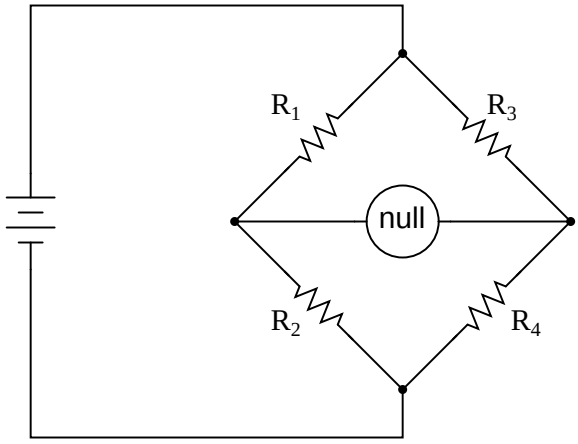

Any one of the four resistors in the above bridge can be the resistor of unknown value, and its value can be determined by a ratio of the other three, which are "calibrated," or whose resistances are known to a precise degree. When the bridge is in a balanced condition (zero voltage as indicated by the null detector meter), the ratio works out to be this:

*In a condition of **balance**:*

$$\frac{R_1}{R_2} = \frac{R_3}{R_4}$$

One of the advantages of using a bridge circuit to measure resistance is that the voltage of the power source is irrelevant. Practically speaking, the higher the supply voltage, the easier it is to detect a condition of imbalance between the four resistors with the null detector, and thus the more sensitive it will be. A greater supply voltage leads to the possibility of increased measurement precision. However, there will be no fundamental error introduced as a result of a lesser or greater power supply voltage unlike other types of resistance measurement schemes.

Impedance bridges work the same, only the balance equation is with *complex* quantities, as both magnitude and phase across the components of the two dividers must be equal in order for the null detector to indicate "zero." The null detector, of course, must be a device capable of detecting very small AC voltages. An sensitive oscilloscope is often used for this, although very sensitive electromechanical meter movements and even headphones (small speakers) have been used if the source frequency is within audio range.

General impedance bridge

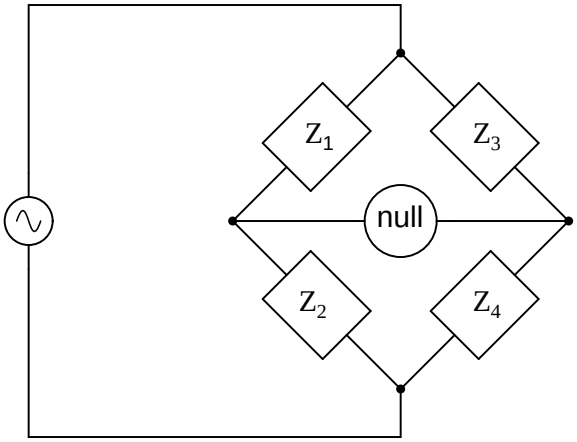

A box with a "Z" written inside is the symbol for any nonspecific impedance.

For this general form of AC bridge to balance, the impedance ratios of each branch must be equal:

$$\frac{Z_1}{Z_2} = \frac{Z_3}{Z_4}$$

Again, it must be stressed that the impedance quantities in the above equation *must* be complex, accounting for both magnitude and phase angle. It is not good enough that the impedance magnitudes alone be balanced; without phase angles in balance as well, there will still be voltage

across the terminals of the null detector and the bridge will not be balanced.

Bridge circuits can be constructed to measure just about any device value desired, be it capacitance, inductance, resistance, or even "Q." As always in bridge measurement circuits, the unknown quantity is always "balanced" against a known standard, obtained from a high-quality, calibrated component that can be adjusted in value until the null detector device indicates a condition of balance. Depending on how the bridge is set up, the unknown component's value may be determined directly from the setting of the calibrated standard, or derived from that standard through a mathematical formula.

A couple of simple bridge circuits are shown below, one for inductance and one for capacitance:

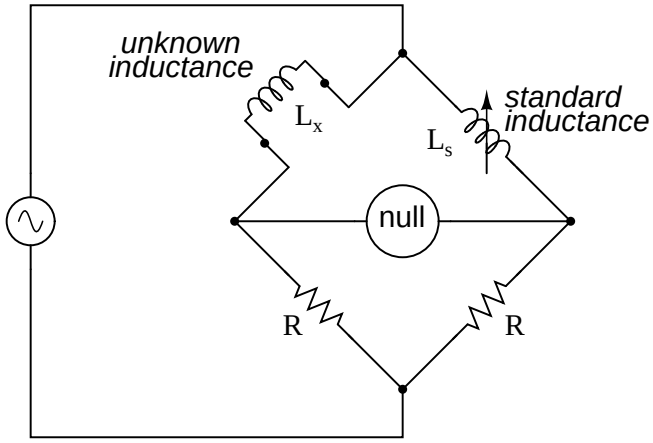

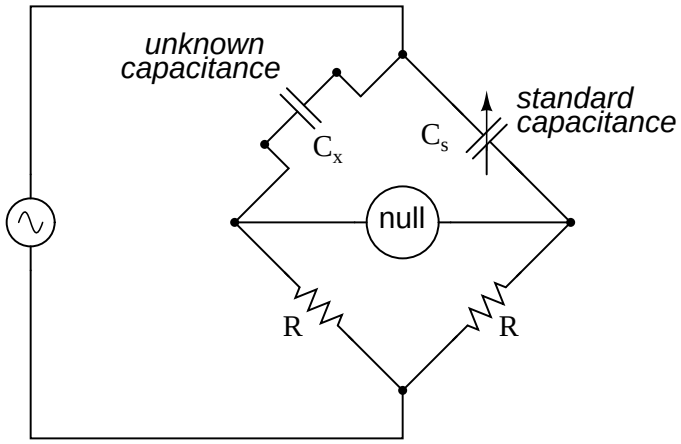

Simple "symmetrical" bridges such as these are so named because they exhibit symmetry (mirror-image similarity) from left to right. The two bridge circuits shown above are balanced by adjusting the calibrated reactive component (L_s or C_s). They are a bit simplified from their real-life counterparts, as practical symmetrical bridge circuits often have a calibrated, variable resistor in series or parallel with the reactive component to balance out stray resistance in the unknown component.

But, in the hypothetical world of perfect components, these simple bridge circuits do just fine to illustrate the basic concept.

An example of a little extra complexity added to compensate for real-world effects can be found in the so-called *Wien bridge*, which uses a parallel capacitor-resistor standard impedance to balance out an unknown series capacitor-resistor combination. All capacitors have some amount of internal resistance, be it literal or equivalent (in the form of dielectric heating losses) which tend to spoil their otherwise perfectly reactive natures. This internal resistance may be of interest to measure, and so the Wien bridge attempts to do so by providing a balancing impedance that isn't "pure" either:

The Wien bridge

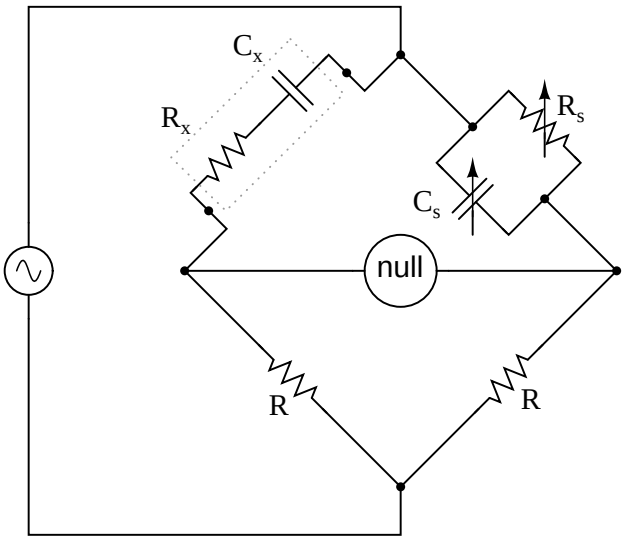

Being that there are two standard components to be adjusted (a resistor and a capacitor) this bridge will take a little more time to balance than the others we've seen so far. The combined effect of R_s and C_s is to alter the magnitude and phase angle until the bridge achieves a condition of balance. Once that balance is achieved, the settings of R_s and C_s can be read from their calibrated knobs, the parallel impedance of the two determined mathematically, and the unknown capacitance and resistance determined mathematically from the balance equation ($Z_1/Z_2 = Z_3/Z_4$).

It is assumed in the operation of the Wien bridge that the standard capacitor has negligible internal resistance, or at least that resistance is already known so that it can be factored into the balance equation. Wien bridges are useful for determining the values of "lossy" capacitor designs like electrolytics, where the internal resistance is relatively high. They are also used as frequency meters, because the balance of the bridge is frequency-dependent. When used in this fashion, the capacitors are made fixed (and usually of equal value) and the top two resistors are made variable and are adjusted by means of the same knob.

An interesting variation on this theme is found in the next bridge circuit, used to precisely measure inductances.

The Maxwell-Wien bridge

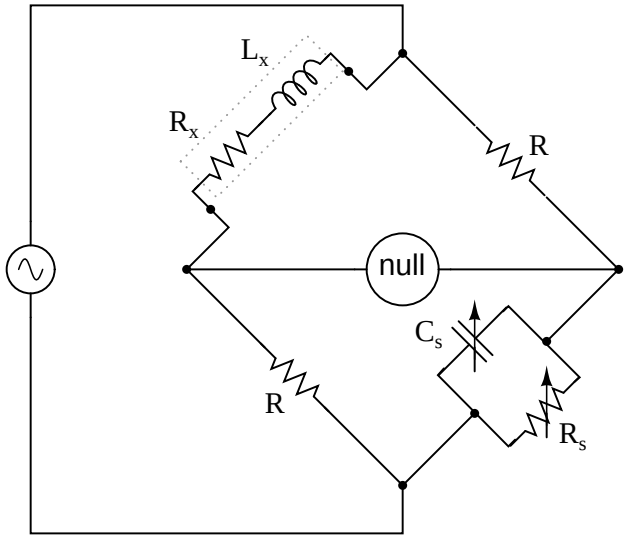

This ingenious bridge circuit is known as the *Maxwell-Wien bridge* (sometimes known plainly as the *Maxwell bridge*), and is used to measure unknown inductances in terms of calibrated resistance and capacitance. Calibration-grade inductors are more difficult to manufacture than capacitors of similar precision, and so the use of a simple "symmetrical" inductance bridge is not always practical. Because the phase shifts of inductors and capacitors are exactly opposite each other, a capacitive impedance can balance out an inductive impedance if they are located in opposite legs of a bridge, as they are here.

Another advantage of using a Maxwell bridge to measure inductance rather than a symmetrical inductance bridge is the elimination of measurement error due to mutual inductance between two inductors. Magnetic fields can be difficult to shield, and even a small amount of coupling between coils in a bridge can introduce substantial errors in certain conditions. With no second inductor to react with in the Maxwell bridge, this problem is eliminated.

For easiest operation, the standard capacitor (C_s) and the resistor in parallel with it (R_s) are made variable, and both must be adjusted to achieve balance. However, the bridge can be made to work if the capacitor is fixed (non-variable) and more than one resistor made variable (at least the resistor in parallel with the capacitor, and one of the other two). However, in the latter configuration it takes more trial-and-error adjustment to achieve balance, as the different variable resistors interact in balancing magnitude and phase.

Unlike the plain Wien bridge, the balance of the Maxwell-Wien bridge is independent of source frequency, and in some cases this bridge can be made to balance in the presence of mixed frequencies from the AC voltage source, the limiting factor being the inductor's stability over a wide frequency range.

There are more variations beyond these designs, but a full discussion is not warranted here. General-purpose impedance bridge circuits are manufactured which can be switched into more than one configuration for maximum flexibility of use.

- **REVIEW:**

- AC bridge circuits work on the same basic principle as DC bridge circuits: that a balanced ratio of impedances (rather than resistances) will result in a "balanced" condition as indicated by the null-detector device.
- Null detectors for AC bridges may be sensitive electromechanical meter movements, oscilloscopes (CRT's), headphones (amplified or unamplified), or any other device capable of registering very small AC voltage levels. Like DC null detectors, its only required point of calibration accuracy is at zero.
- AC bridge circuits can be of the "symmetrical" type where an unknown impedance is balanced by a standard impedance of similar type on the same side (top or bottom) of the bridge. Or, they can be "nonsymmetrical," using parallel impedances to balance series impedances, or even capacitances balancing out inductances.
- AC bridge circuits often have more than one adjustment, since both impedance magnitude AND phase angle must be properly matched to balance.
- Some impedance bridge circuits are frequency-sensitive while others are not. The frequency-sensitive types may be used as frequency measurement devices if all component values are accurately known.

12.6 AC instrumentation transducers

Just as devices have been made to measure certain physical quantities and repeat that information in the form of DC electrical signals (thermocouples, strain gauges, pH probes, etc.), special devices have been made that do the same with AC.

It is often necessary to be able to detect and transmit the physical position of mechanical parts via electrical signals. This is especially true in the fields of automated machine tool control and robotics. A simple and easy way to do this is with a potentiometer:

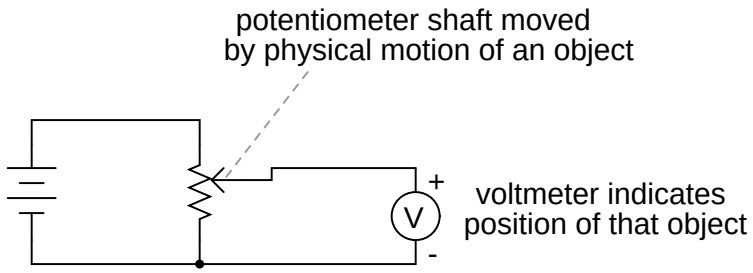

However, potentiometers have their own unique problems. For one, they rely on physical contact between the "wiper" and the resistance strip, which means they suffer the effects of physical wear over time. As potentiometers wear, their proportional output versus shaft position becomes less and less certain. You might have already experienced this effect when adjusting the volume control on an old radio: when twisting the knob, you might hear "scratching" sounds coming out of the speakers. Those noises are the result of poor wiper contact in the volume control potentiometer.

Also, this physical contact between wiper and strip creates the possibility of arcing (sparking) between the two as the wiper is moved. With most potentiometer circuits, the current is so low

that wiper arcing is negligible, but it is a possibility to be considered. If the potentiometer is to be operated in an environment where combustible vapor or dust is present, this potential for arcing translates into a potential for an explosion!

Using AC instead of DC, we are able to completely avoid sliding contact between parts if we use a *variable transformer* instead of a potentiometer. Devices made for this purpose are called LVDT's, which stands for **L**inear **V**ariable **D**ifferential **T**ransformers. The design of an LVDT looks like this:

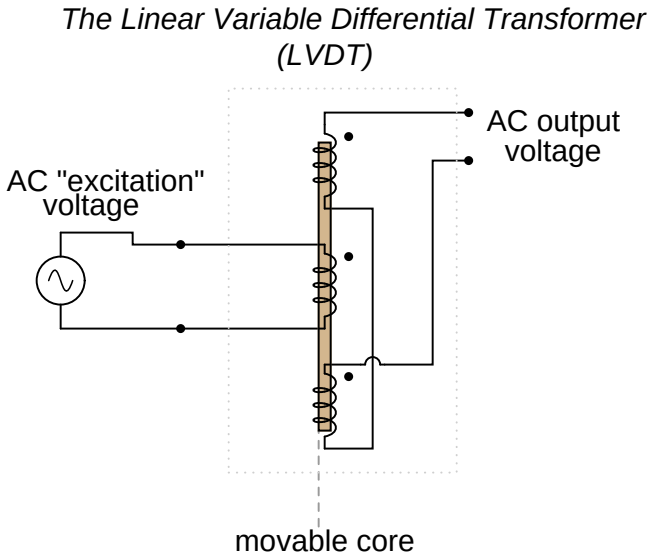

Obviously, this device is a *transformer*: it has a single primary winding powered by an external source of AC voltage, and two secondary windings connected in series-bucking fashion. It is *variable* because the core is free to move between the windings. It is *differential* because of the way the two secondary windings are connected. Being arranged to oppose each other (180° out of phase) means that the output of this device will be the *difference* between the voltage output of the two secondary windings. When the core is centered and both windings are outputting the same voltage, the net result at the output terminals will be zero volts. It is called *linear* because the core's freedom of motion is straight-line.

The AC voltage output by an LVDT indicates the position of the movable core. Zero volts means that the core is centered. The further away the core is from center position, the greater percentage of input ("excitation") voltage will be seen at the output. The phase of the output voltage relative to the excitation voltage indicates which direction from center the core is offset.

The primary advantage of an LVDT over a potentiometer for position sensing is the absence of physical contact between the moving and stationary parts. The core does not contact the wire windings, but slides in and out within a nonconducting tube. Thus, the LVDT does not "wear" like a potentiometer, nor is there the possibility of creating an arc.

Excitation of the LVDT is typically 10 volts RMS or less, at frequencies ranging from power line to the high audio (20 kHz) range. One potential disadvantage of the LVDT is its response time, which is mostly dependent on the frequency of the AC voltage source. If very quick response times are desired, the frequency must be higher to allow whatever voltage-sensing circuits enough cycles of AC to determine voltage level as the core is moved. To illustrate the potential problem here,

imagine this exaggerated scenario: an LVDT powered by a 60 Hz voltage source, with the core being moved in and out hundreds of times per second. The output of this LVDT wouldn't even look like a sine wave because the core would be moved throughout its range of motion before the AC source voltage could complete a single cycle! It would be almost impossible to determine instantaneous core position if it moves faster than the instantaneous source voltage does.

A variation on the LVDT is the RVDT, or **R**otary **V**ariable **D**ifferential **T**ransformer. This device works on almost the same principle, except that the core revolves on a shaft instead of moving in a straight line. RVDT's can be constructed for limited motion of 360° (full-circle) motion.

Continuing with this principle, we have what is known as a *Synchro* or *Selsyn*, which is a device constructed a lot like a wound-rotor polyphase AC motor or generator. The rotor is free to revolve a full 360°, just like a motor. On the rotor is a single winding connected to a source of AC voltage, much like the primary winding of an LVDT. The stator windings are usually in the form of a three-phase Y, although synchros with more than three phases have been built:

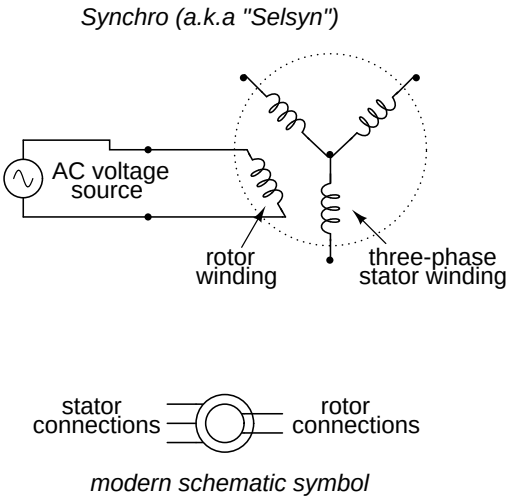

Voltages induced in the stator windings from the rotor's AC excitation are *not* phase-shifted by 120° as in a real three-phase generator. If the rotor were energized with DC current rather than AC and the shaft spun continuously, then the voltages would be true three-phase. But this is not how a synchro is designed to be operated. Rather, this is a *position-sensing* device much like an RVDT, except that its output signal is much more definite. With the rotor energized by AC, the stator winding voltages will be proportional in magnitude to the angular position of the rotor, phase either 0° or 180° shifted, like a regular LVDT or RVDT. You could think of it as a transformer with one primary winding and three secondary windings, each secondary winding oriented at a unique angle. As the rotor is slowly turned, each winding in turn will line up directly with the rotor, producing full voltage, while the other windings will produce something less than full voltage.

Synchros are often used in pairs. With their rotors connected in parallel and energized by the same AC voltage source, their shafts will match position to a high degree of accuracy:

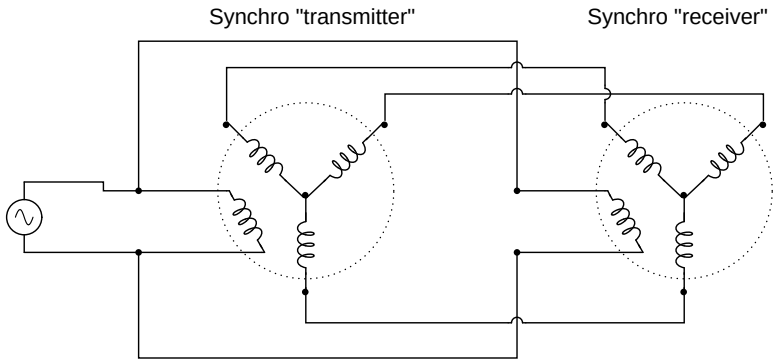

The receiver rotor will turn to match position with the transmitter rotor so long as the two rotors remain energized.

Such "transmitter/receiver" pairs have been used on ships to relay rudder position, or to relay navigational gyro position over fairly long distances. The only difference between the "transmitter" and the "receiver" is which one gets turned by an outside force. The "receiver" can just as easily be used as the "transmitter" by forcing its shaft to turn and letting the synchro on the left match position.

If the receiver's rotor is left unpowered, it will act as a position-error detector, generating an AC voltage at the rotor if the shaft is anything other than 90° or 270° shifted from the shaft position of the transmitter. The receiver rotor will no longer generate any torque and consequently will no longer automatically match position with the transmitter's:

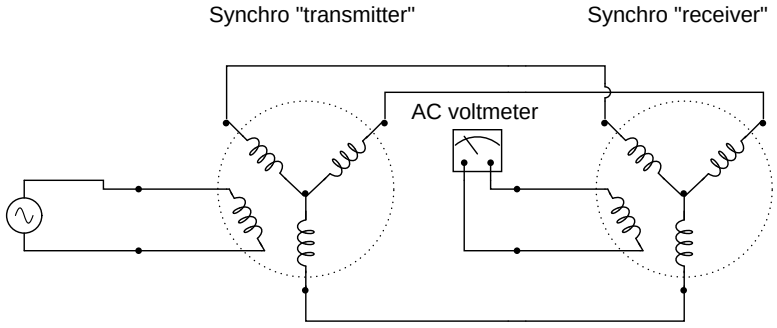

AC voltmeter registers a voltage if receiver rotor position isn't exactly 90 or 270 degrees shifted from the position of the transmitter rotor.

This can be thought of almost as a sort of bridge circuit that achieves balance only if the receiver shaft is brought to one of two (matching) positions with the transmitter shaft.

One rather ingenious application of the synchro is in the creation of a phase-shifting device, provided that the stator is energized by three-phase AC:

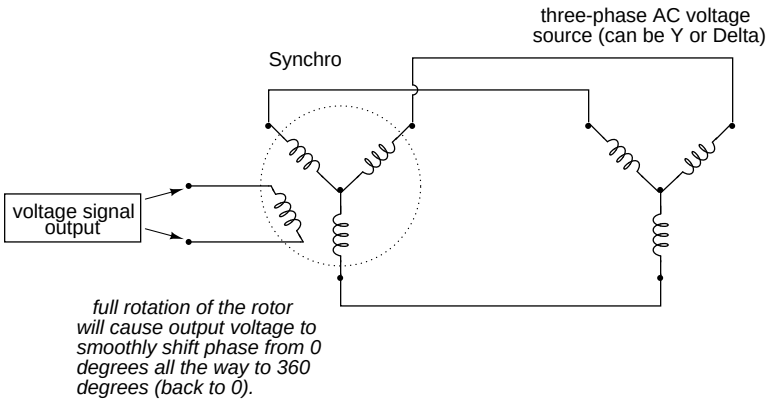

As the synchro's rotor is turned, the rotor coil will progressively align with each stator coil, their respective magnetic fields being 120° phase-shifted from one another. In between those positions, these phase-shifted fields will mix to produce a rotor voltage somewhere between 0°, 120°, or 240° shift. The practical result is a device capable of providing an infinitely variable-phase AC voltage with the twist of a knob (attached to the rotor shaft).

So far the transducers discussed have all been of the inductive variety. However, it is possible to make transducers which operate on variable capacitance as well, AC being used to sense the change in capacitance and generate a variable output voltage.

Remember that the capacitance between two conductive surfaces varies with three major factors: the overlapping area of those two surfaces, the distance between them, and the dielectric constant of the material in between the surfaces. If two out of three of these variables can be fixed (stabilized) and the third allowed to vary, then any measurement of capacitance between the surfaces will be solely indicative of changes in that third variable.

Medical researchers have long made use of capacitive sensing to detect physiological changes in living bodies. As early as 1907, a German researcher named H. Cremer placed two metal plates on either side of a beating frog heart and measured the capacitance changes resulting from the heart alternately filling and emptying itself of blood. Similar measurements have been performed on human beings with metal plates placed on the chest and back, recording respiratory and cardiac action by means of capacitance changes. For more precise capacitive measurements of organ activity, metal probes have been inserted into organs (especially the heart) on the tips of catheter tubes, capacitance being measured between the metal probe and the body of the subject. With a sufficiently high AC excitation frequency and sensitive enough voltage detector, not just the pumping action but also the *sounds* of the active heart can be readily interpreted.

Like inductive transducers, capacitive transducers can also be made to be self-contained units, unlike the direct physiological examples described above. Some transducers work by making one of the capacitor plates movable, either in such a way as to vary the overlapping area or the distance between the plates. Other transducers work by moving a dielectric material in and out between two fixed plates:

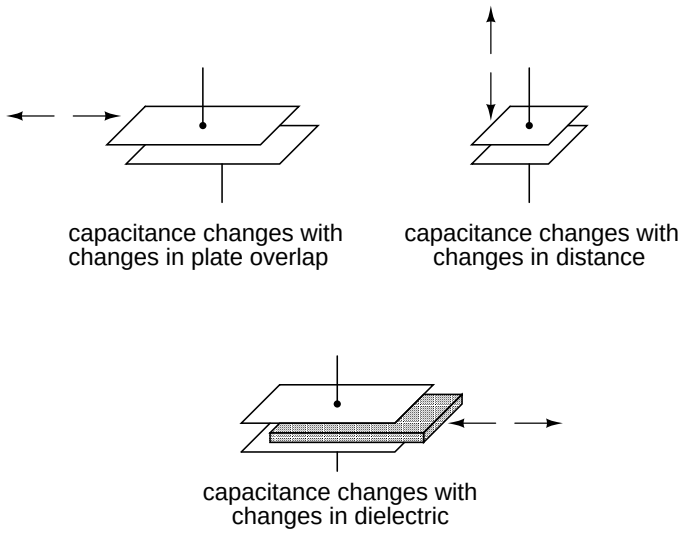

Transducers with greater sensitivity and immunity to changes in other variables can be obtained by way of differential design, much like the concept behind the LVDT (Linear Variable *Differential* Transformer). Here are a few examples of differential capacitive transducers:

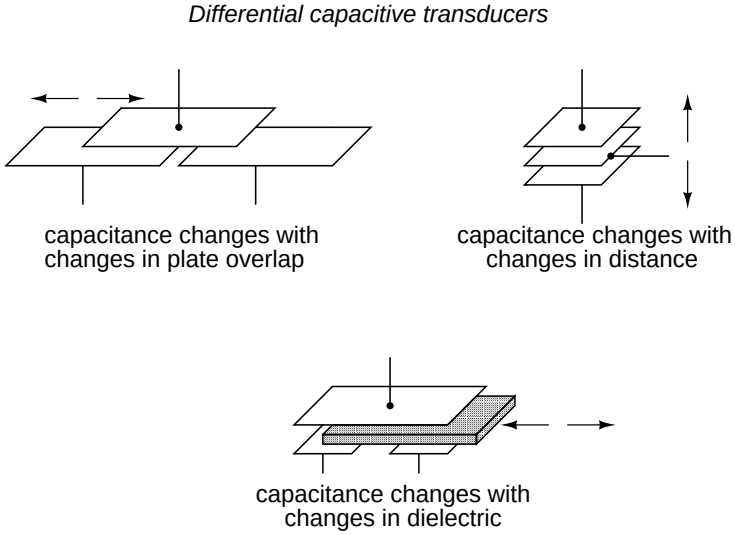

As you can see, all of the differential devices shown in the above illustration have *three* wire connections rather than two: one wire for each of the "end" plates and one for the "common" plate. As the capacitance between one of the "end" plates and the "common" plate changes, the capacitance between the other "end" plate and the "common" plate is such to change in the opposite direction. This kind of transducer lends itself very well to implementation in a bridge circuit:

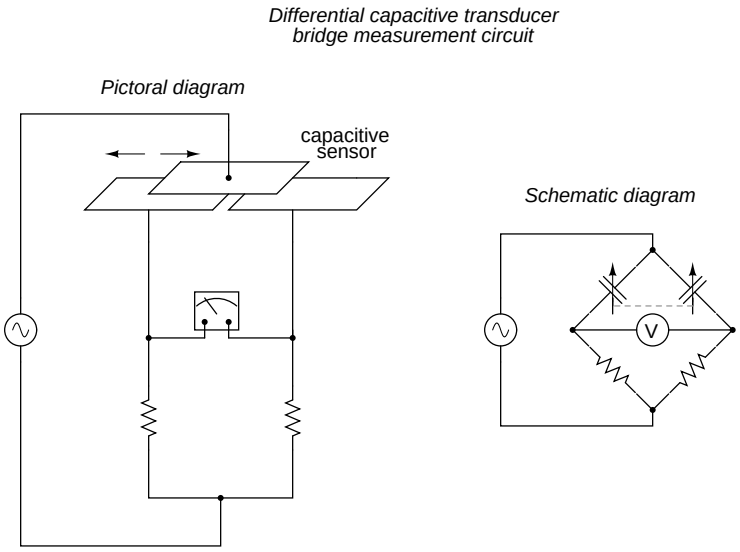

The bridge circuit is not the only way to effectively interpret the differential capacitance output of such a transducer, but it is one of the simplest to implement and understand. As with the LVDT, the voltage output of the bridge is proportional to the displacement of the transducer action from its center position, and the direction of offset will be indicated by phase shift. This kind of bridge circuit is similar in function to the kind used with strain gauges: it is not intended to be in a "balanced" condition all the time, but rather the degree of imbalance represents the magnitude of the quantity being measured.

Chapter 13

ABOUT THIS BOOK

13.1 Purpose

They say that necessity is the mother of invention. At least in the case of this book, that adage is true. As an industrial electronics instructor, I was forced to use a sub-standard textbook during my first year of teaching. My students were daily frustrated with the many typographical errors and obscure explanations in this book, having spent much time at home struggling to comprehend the material within. Worse yet were the many incorrect answers in the back of the book to selected problems. Adding insult to injury was the $100+ price.

Contacting the publisher proved to be an exercise in futility. Even though the particular text I was using had been in print and in popular use for a couple of years, they claimed my complaint was the first they'd ever heard. My request to review the draft for the next edition of their book was met with disinterest on their part, and I resolved to find an alternative text.

Finding a suitable alternative was more difficult than I had imagined. Sure, there were plenty of texts in print, but the really good books seemed a bit too heavy on the math and the less intimidating books omitted a lot of information I felt was important. Some of the best books were out of print, and those that were still being printed were quite expensive.

It was out of frustration that I compiled *Lessons in Electric Circuits* from notes and ideas I had been collecting for years. My primary goal was to put readable, high-quality information into the hands of my students, but a secondary goal was to make the book as affordable as possible. Over the years, I had experienced the benefit of receiving free instruction and encouragement in my pursuit of learning electronics from many people, including several teachers of mine in elementary and high school. Their selfless assistance played a key role in my own studies, paving the way for a rewarding career and fascinating hobby. If only I could extend the gift of their help by giving to other people what they gave to me . . .

So, I decided to make the book freely available. More than that, I decided to make it "open," following the same development model used in the making of free software (most notably the various UNIX utilities released by the Free Software Foundation, and the Linux operating system, whose fame is growing even as I write). The goal was to copyright the text – so as to protect my authorship – but expressly allow anyone to distribute and/or modify the text to suit their own needs with a minimum of legal encumbrance. This willful and formal revoking of standard distribution limitations

under copyright is whimsically termed *copyleft*. Anyone can "copyleft" their creative work simply by appending a notice to that effect on their work, but several Licenses already exist, covering the fine legal points in great detail.

The first such License I applied to my work was the GPL – General Public License – of the Free Software Foundation (GNU). The GPL, however, is intended to copyleft works of computer software, and although its introductory language is broad enough to cover works of text, its wording is not as clear as it could be for that application. When other, less specific copyleft Licenses began appearing within the free software community, I chose one of them (the Design Science License, or DSL) as the official notice for my project.

In "copylefting" this text, I guaranteed that no instructor would be limited by a text insufficient for their needs, as I had been with error-ridden textbooks from major publishers. I'm sure this book in its initial form will not satisfy everyone, but anyone has the freedom to change it, leveraging my efforts to suit variant and individual requirements. For the beginning student of electronics, learn what you can from this book, editing it as you feel necessary if you come across a useful piece of information. Then, if you pass it on to someone else, you will be giving them something better than what you received. For the instructor or electronics professional, feel free to use this as a reference manual, adding or editing to your heart's content. The only "catch" is this: if you plan to distribute your modified version of this text, you must give credit where credit is due (to me, the original author, and anyone else whose modifications are contained in your version), and you must ensure that whoever you give the text to is aware of their freedom to similarly share and edit the text. The next chapter covers this process in more detail.

It must be mentioned that although I strive to maintain technical accuracy in all of this book's content, the subject matter is broad and harbors many potential dangers. Electricity maims and kills without provocation, and deserves the utmost respect. I strongly encourage experimentation on the part of the reader, but only with circuits powered by small batteries where there is no risk of electric shock, fire, explosion, etc. High-power electric circuits should be left to the care of trained professionals! The Design Science License clearly states that neither I nor any contributors to this book bear any liability for what is done with its contents.

13.2 The use of SPICE

One of the best ways to learn how things work is to follow the inductive approach: to observe specific instances of things working and derive general conclusions from those observations. In science education, labwork is the traditionally accepted venue for this type of learning, although in many cases labs are designed by educators to reinforce principles previously learned through lecture or textbook reading, rather than to allow the student to learn on their own through a truly exploratory process.

Having taught myself most of the electronics that I know, I appreciate the sense of frustration students may have in teaching themselves from books. Although electronic components are typically inexpensive, not everyone has the means or opportunity to set up a laboratory in their own homes, and when things go wrong there's no one to ask for help. Most textbooks seem to approach the task of education from a deductive perspective: tell the student how things are supposed to work, then apply those principles to specific instances that the student may or may not be able to explore by themselves. The inductive approach, as useful as it is, is hard to find in the pages of a book.

However, textbooks don't have to be this way. I discovered this when I started to learn a

computer program called SPICE. It is a text-based piece of software intended to model circuits and provide analyses of voltage, current, frequency, etc. Although nothing is quite as good as building real circuits to gain knowledge in electronics, computer simulation is an excellent alternative. In learning how to use this powerful tool, I made a discovery: SPICE could be used within a textbook to present circuit simulations to allow students to "observe" the phenomena for themselves. This way, the readers could learn the concepts inductively (by interpreting SPICE's output) as well as deductively (by interpreting my explanations). Furthermore, in seeing SPICE used over and over again, they should be able to understand how to use it themselves, providing a perfectly safe means of experimentation on their own computers with circuit simulations of their own design.

Another advantage to including computer analyses in a textbook is the empirical verification it adds to the concepts presented. Without demonstrations, the reader is left to take the author's statements on faith, trusting that what has been written is indeed accurate. The problem with faith, of course, is that it is only as good as the authority in which it is placed and the accuracy of interpretation through which it is understood. Authors, like all human beings, are liable to err and/or communicate poorly. With demonstrations, however, the reader can immediately see for themselves that what the author describes is indeed true. Demonstrations also serve to clarify the meaning of the text with concrete examples.

SPICE is introduced in the book early on, and hopefully in a gentle enough way that it doesn't create confusion. For those wishing to learn more, a chapter in the Reference volume (volume V) contains an overview of SPICE with many example circuits. There may be more flashy (graphic) circuit simulation programs in existence, but SPICE is free, a virtue complementing the charitable philosophy of this book very nicely.

13.3 Acknowledgements

First, I wish to thank my wife, whose patience during those many and long evenings (and weekends!) of typing has been extraordinary.

I also wish to thank those whose open-source software development efforts have made this endeavor all the more affordable and pleasurable. The following is a list of various free computer software used to make this book, and the respective programmers:

- *GNU/Linux* Operating System – Linus Torvalds, Richard Stallman, and a host of others too numerous to mention.
- *Vim* text editor – Bram Moolenaar and others.
- *Xcircuit* drafting program – Tim Edwards.
- *SPICE* circuit simulation program – too many contributors to mention.
- TEX text processing system – Donald Knuth and others.
- *Texinfo* document formatting system – Free Software Foundation.
- LATEX document formatting system – Leslie Lamport and others.
- *Gimp* image manipulation program – too many contributors to mention.

Appreciation is also extended to Robert L. Boylestad, whose first edition of *Introductory Circuit Analysis* taught me more about electric circuits than any other book. Other important texts in my electronics studies include the 1939 edition of *The "Radio" Handbook*, Bernard Grob's second edition of *Introduction to Electronics I*, and Forrest Mims' *Engineer's Notebook*.

Thanks to the staff of the Bellingham Antique Radio Museum, who were generous enough to let me terrorize their establishment with my camera and flash unit.

I wish to specifically thank Jeffrey Elkner and all those at Yorktown High School for being willing to host my book as part of their Open Book Project, and to make the first effort in contributing to its form and content. Thanks also to David Sweet (`http://www.andamooka.org`) and Ben Crowell (`http://www.lightandmatter.com`) for providing encouragement, constructive criticism, and a wider audience for the online version of this book.

Thanks to Michael Stutz for drafting his Design Science License, and to Richard Stallman for pioneering the concept of copyleft.

Last but certainly not least, many thanks to my parents and those teachers of mine who saw in me a desire to learn about electricity, and who kindled that flame into a passion for discovery and intellectual adventure. I honor you by helping others as you have helped me.

Tony Kuphaldt, July 2001

Chapter 14

CONTRIBUTOR LIST

14.1 How to contribute to this book

As a copylefted work, this book is open to revision and expansion by any interested parties. The only "catch" is that credit must be given where credit is due. This *is* a copyrighted work: it is *not* in the public domain!

If you wish to cite portions of this book in a work of your own, you must follow the same guidelines as for any other copyrighted work. Here is a sample from the Design Science License:

```
The Work is copyright the Author.  All rights to the Work are reserved
by the Author, except as specifically described below. This License
describes the terms and conditions under which the Author permits you
to copy, distribute and modify copies of the Work.

In addition, you may refer to the Work, talk about it, and (as
dictated by "fair use") quote from it, just as you would any
copyrighted material under copyright law.

Your right to operate, perform, read or otherwise interpret and/or
execute the Work is unrestricted; however, you do so at your own risk,
because the Work comes WITHOUT ANY WARRANTY -- see Section 7 ("NO
WARRANTY") below.
```

If you wish to modify this book in any way, you must document the nature of those modifications in the "Credits" section along with your name, and ideally, information concerning how you may be contacted. Again, the Design Science License:

```
Permission is granted to modify or sample from a copy of the Work,
producing a derivative work, and to distribute the derivative work
under the terms described in the section for distribution above,
provided that the following terms are met:
```

```
(a) The new, derivative work is published under the terms of this
License.

(b) The derivative work is given a new name, so that its name or
title can not be confused with the Work, or with a version of
the Work, in any way.

(c) Appropriate authorship credit is given: for the differences
between the Work and the new derivative work, authorship is
attributed to you, while the material sampled or used from
the Work remains attributed to the original Author; appropriate
notice must be included with the new work indicating the nature
and the dates of any modifications of the Work made by you.
```

Given the complexities and security issues surrounding the maintenance of files comprising this book, it is recommended that you submit any revisions or expansions to the original author (Tony R. Kuphaldt). You are, of course, welcome to modify this book directly by editing your own personal copy, but we would all stand to benefit from your contributions if your ideas were incorporated into the online "master copy" where all the world can see it.

14.2 Credits

All entries arranged in alphabetical order of surname. Major contributions are listed by individual name with some detail on the nature of the contribution(s), date, contact info, etc. Minor contributions (typo corrections, etc.) are listed by name only for reasons of brevity. Please understand that when I classify a contribution as "minor," it is in no way inferior to the effort or value of a "major" contribution, just smaller in the sense of less text changed. Any and all contributions are gratefully accepted. I am indebted to all those who have given freely of their own knowledge, time, and resources to make this a better book!

14.2.1 Tony R. Kuphaldt

- **Date(s) of contribution(s):** 1996 to present
- **Nature of contribution:** Original author.
- **Contact at:** tonykuphaldt@mailcity.com

14.2.2 Jason Starck

- **Date(s) of contribution(s):** May-June 2000
- **Nature of contribution:** HTML formatting, some error corrections.
- **Contact at:** jstarck@yhslug.tux.org

14.2.3 Your name here

- **Date(s) of contribution(s):** Month and year of contribution
- **Nature of contribution:** Insert text here, describing how you contributed to the book.
- **Contact at:** `my_email@provider.net`

14.2.4 Typo corrections and other "minor" contributions

- *The students of Bellingham Technical College's Instrumentation program.*
- Jim Palmer (typo correction on complex number math)

Chapter 15

DESIGN SCIENCE LICENSE

Copyright © 1999-2000 Michael Stutz stutz@dsl.org
Verbatim copying of this document is permitted, in any medium.

15.1 0. Preamble

Copyright law gives certain exclusive rights to the author of a work, including the rights to copy, modify and distribute the work (the "reproductive," "adaptative," and "distribution" rights).

The idea of "copyleft" is to willfully revoke the exclusivity of those rights under certain terms and conditions, so that anyone can copy and distribute the work or properly attributed derivative works, while all copies remain under the same terms and conditions as the original.

The intent of this license is to be a general "copyleft" that can be applied to any kind of work that has protection under copyright. This license states those certain conditions under which a work published under its terms may be copied, distributed, and modified.

Whereas "design science" is a strategy for the development of artifacts as a way to reform the environment (not people) and subsequently improve the universal standard of living, this Design Science License was written and deployed as a strategy for promoting the progress of science and art through reform of the environment.

15.2 1. Definitions

"License" shall mean this Design Science License. The License applies to any work which contains a notice placed by the work's copyright holder stating that it is published under the terms of this Design Science License.

"Work" shall mean such an aforementioned work. The License also applies to the output of the Work, only if said output constitutes a "derivative work" of the licensed Work as defined by copyright law.

"Object Form" shall mean an executable or performable form of the Work, being an embodiment of the Work in some tangible medium.

"Source Data" shall mean the origin of the Object Form, being the entire, machine-readable, preferred form of the Work for copying and for human modification (usually the language, encoding

or format in which composed or recorded by the Author); plus any accompanying files, scripts or other data necessary for installation, configuration or compilation of the Work.

(Examples of "Source Data" include, but are not limited to, the following: if the Work is an image file composed and edited in 'PNG' format, then the original PNG source file is the Source Data; if the Work is an MPEG 1.0 layer 3 digital audio recording made from a 'WAV' format audio file recording of an analog source, then the original WAV file is the Source Data; if the Work was composed as an unformatted plaintext file, then that file is the the Source Data; if the Work was composed in LaTeX, the LaTeX file(s) and any image files and/or custom macros necessary for compilation constitute the Source Data.)

"Author" shall mean the copyright holder(s) of the Work.

The individual licensees are referred to as "you."

15.3 2. Rights and copyright

The Work is copyright the Author. All rights to the Work are reserved by the Author, except as specifically described below. This License describes the terms and conditions under which the Author permits you to copy, distribute and modify copies of the Work.

In addition, you may refer to the Work, talk about it, and (as dictated by "fair use") quote from it, just as you would any copyrighted material under copyright law.

Your right to operate, perform, read or otherwise interpret and/or execute the Work is unrestricted; however, you do so at your own risk, because the Work comes WITHOUT ANY WARRANTY – see Section 7 ("NO WARRANTY") below.

15.4 3. Copying and distribution

Permission is granted to distribute, publish or otherwise present verbatim copies of the entire Source Data of the Work, in any medium, provided that full copyright notice and disclaimer of warranty, where applicable, is conspicuously published on all copies, and a copy of this License is distributed along with the Work.

Permission is granted to distribute, publish or otherwise present copies of the Object Form of the Work, in any medium, under the terms for distribution of Source Data above and also provided that one of the following additional conditions are met:

(a) The Source Data is included in the same distribution, distributed under the terms of this License; or

(b) A written offer is included with the distribution, valid for at least three years or for as long as the distribution is in print (whichever is longer), with a publicly-accessible address (such as a URL on the Internet) where, for a charge not greater than transportation and media costs, anyone may receive a copy of the Source Data of the Work distributed according to the section above; or

(c) A third party's written offer for obtaining the Source Data at no cost, as described in paragraph (b) above, is included with the distribution. This option is valid only if you are a non-commercial party, and only if you received the Object Form of the Work along with such an offer.

You may copy and distribute the Work either gratis or for a fee, and if desired, you may offer warranty protection for the Work.

The aggregation of the Work with other works which are not based on the Work – such as but not limited to inclusion in a publication, broadcast, compilation, or other media – does not bring the other works in the scope of the License; nor does such aggregation void the terms of the License for the Work.

15.5 4. Modification

Permission is granted to modify or sample from a copy of the Work, producing a derivative work, and to distribute the derivative work under the terms described in the section for distribution above, provided that the following terms are met:

(a) The new, derivative work is published under the terms of this License.

(b) The derivative work is given a new name, so that its name or title can not be confused with the Work, or with a version of the Work, in any way.

(c) Appropriate authorship credit is given: for the differences between the Work and the new derivative work, authorship is attributed to you, while the material sampled or used from the Work remains attributed to the original Author; appropriate notice must be included with the new work indicating the nature and the dates of any modifications of the Work made by you.

15.6 5. No restrictions

You may not impose any further restrictions on the Work or any of its derivative works beyond those restrictions described in this License.

15.7 6. Acceptance

Copying, distributing or modifying the Work (including but not limited to sampling from the Work in a new work) indicates acceptance of these terms. If you do not follow the terms of this License, any rights granted to you by the License are null and void. The copying, distribution or modification of the Work outside of the terms described in this License is expressly prohibited by law.

If for any reason, conditions are imposed on you that forbid you to fulfill the conditions of this License, you may not copy, distribute or modify the Work at all.

If any part of this License is found to be in conflict with the law, that part shall be interpreted in its broadest meaning consistent with the law, and no other parts of the License shall be affected.

15.8 7. No warranty

THE WORK IS PROVIDED "AS IS," AND COMES WITH ABSOLUTELY NO WARRANTY, EXPRESS OR IMPLIED, TO THE EXTENT PERMITTED BY APPLICABLE LAW, INCLUDING BUT NOT LIMITED TO THE IMPLIED WARRANTIES OF MERCHANTABILITY OR FITNESS FOR A PARTICULAR PURPOSE.

15.9 8. Disclaimer of liability

IN NO EVENT SHALL THE AUTHOR OR CONTRIBUTORS BE LIABLE FOR ANY DIRECT, INDIRECT, INCIDENTAL, SPECIAL, EXEMPLARY, OR CONSEQUENTIAL DAMAGES (INCLUDING, BUT NOT LIMITED TO, PROCUREMENT OF SUBSTITUTE GOODS OR SERVICES; LOSS OF USE, DATA, OR PROFITS; OR BUSINESS INTERRUPTION) HOWEVER CAUSED AND ON ANY THEORY OF LIABILITY, WHETHER IN CONTRACT, STRICT LIABILITY, OR TORT (INCLUDING NEGLIGENCE OR OTHERWISE) ARISING IN ANY WAY OUT OF THE USE OF THIS WORK, EVEN IF ADVISED OF THE POSSIBILITY OF SUCH DAMAGE.

END OF TERMS AND CONDITIONS

```
[$Id:  dsl.txt,v 1.25 2000/03/14 13:14:14 m Exp m $]
```

Index

Absolute value, vector, 35
AC, 1
AC circuit analysis, 100
Alternating current, 1
Alternator, 2, 235
Ammeter, 275
Amplifier, 218
Amplifier, magnetic, 220
Amplitude, 11
Amplitude, average, 12
Amplitude, peak, 11
Amplitude, peak-to-peak, 11
Amplitude, RMS, 14
Amplitude, vector, 26
Analysis, AC circuit, 100
Analysis, Fourier, 134
Analysis, frequency domain, 137
Analysis, parallel, 88
Analysis, series, 83
Analysis, series-parallel, 92, 100
Analysis, time domain, 137
Analyzer, spectrum, 136
Angle, vector, 35
Antenna, 20, 67
Antiresonance, 121
Antiresonance, mechanical, 124
Arithmetic, with complex numbers, 40
Artifact, measurement, 145
Atomic clock, 284
Attenuation, 171
Autotransformer, 203
Average amplitude, AC, 12, 278

Band-elimination filter, 172
Band-pass filter, 169
Band-reject filter, 172
Band-stop filter, 172
Bode plot, 111, 137, 161
Boosting, AC voltage sources, 229
Boosting, transformer connection, 203
Bridge circuit, 292, 303
Bridge, Maxwell-Wien, 296
Bridge, symmetrical, 294
Bridge, Wheatstone, 282
Bridge, Wien, 295
Brush, generator, 2
Bucking, AC voltage sources, 229
Bucking, transformer connection, 203

C, symbol for capacitance, 70
Calculus, 50, 70
Capacitance, 70
Capacitive coupling, 125, 158
Capacitive reactance, 70, 72
Capacitor, 70
Capacitor, variable, 301
Cathode Ray Tube, 277
Chord, music, 126
Clock, atomic, 284
Coil, Tesla, 216
Color (musical), 127
Common-mode voltage, 197
Complex number, 19, 23, 263
Complex number arithmetic, 40
Conservation of Energy, Law of, 193
Core loss, 121
Counter, 282
Coupling, signal, 125, 158
CPS, unit, 8
Crest, 11
Crossover network, 161
CRT, 277
Crystal, 282
CT, 215, 279

Current transformer, 215, 279
Current, line, 248
Current, phase, 248
Cutoff frequency, 164, 168
Cycle, 7

D'Arsonval meter movement, 14, 275
DC, 1
DC equivalent, AC measurement, 14
Delta configuration, 247
Detector, 292
Dielectric heating, 81
Diode, 138, 139, 275
Dipole antenna, 21
Direct current, 1
Domain, frequency, 137
Domain, time, 137
Dot convention, transformer, 200

e, symbol for instantaneous voltage, 49, 50, 69
E, symbol for voltage, 55, 75
Eddy current, 64
Eddy current loss, 121, 222
Effective resistance, 65
Electric field, 20, 103
Electrolytic capacitor, 82
Electromagnetic induction, 2
Electromagnetic wave, 20
Electrostatic meter movement, 277
Energy, kinetic, 105
Energy, potential, 105
Equalizer, 161
Equalizer, graphic, 136
Equivalent, AC to DC, 14

f, symbol for frequency, 52, 72
Factor, power, 259
Farad, 70
Fast Fourier Transform, 136, 292
Ferrite, 65
Ferroresonant transformer, 207
FFT, 136, 292
Field, electric, 20, 103
Field, magnetic, 20, 103
Figure, Lissajous, 284
Filter, 115, 161
Filter, band-elimination, 172
Filter, band-pass, 169
Filter, band-reject, 172
Filter, band-stop, 172
Filter, high-pass, 166
Filter, low-pass, 162
Filter, notch, 172
Filter, resonant, 174
Fourier analysis, 134
Fourier Transform, 134
Frequency, 8, 280
Frequency meter, 281
Frequency, cutoff, 164, 168
Frequency, fundamental, 126
Full-wave rectification, 141
Function, sine, 6
Fundamental frequency, 126

Generator, 2, 235
Graphic equalizer, 136
Ground, 27

Half-wave rectification, 139
Hall effect, 288
Harmonic, 126
Heating, dielectric, 81
Heating, inductive, 64
Henry, 50
Hertz, unit, 8
High-pass filter, 166
Hot conductor, 228
Hyperbolic function, trigonometry, 41
Hysteresis, 222

I, symbol for current, 55, 75
i, symbol for instantaneous current, 49, 69, 70
Imaginary number, 37
Impedance, 23, 54, 74, 84
Impedance matching, 209, 211
Inductance, 50
Inductance, leakage, 223
Inductance, mutual, 185
Induction, electromagnetic, 2
Induction, mutual, 3
Inductive coupling, 125, 158
Inductive heating, 64

Inductive reactance, 50, 52
Inductor, 50
Instantaneous value, 49, 69
Iron-vane meter movement, 14, 277
Isolation transformer, 197
Isolation, transformer, 196

Joule, 290

KCL, 17, 84
Keyboard, piano, 9
Kirchhoff's Current Law, 17, 84
Kirchhoff's Voltage Law, 17, 42, 84
KVL, 17, 42, 84

L, symbol for inductance, 50
Lagging phase shift, 19, 51, 71, 269
Laminated iron core, 222
Leading phase shift, 19, 51, 71, 269
Leakage inductance, 223
Lenz's Law, 50
Line, polyphase system, 248
Lissajous figure, 284
Litz wire, 65
Load, nonlinear, 290
Loop antenna, 21
Low-pass filter, 162
LVDT, 298

Magnetic amplifier, 220
Magnetic field, 20, 103
Magnetic field, rotating, 244
Maximum Power Transfer Theorem, 210
Maxwell-Wien bridge circuit, 296
Meter, power factor, 270
Modulus. vector, 35
Motor, 241
Motor, induction, 243
Motor, synchronous, 243
Motor/generator set, 193
Mutual inductance, 185
Mutual induction, 3

Neutral conductor, 228
Non-sinusoidal, 10
Nonlinear components, 139, 290
Nonsinusoidal, 125
Norton's Theorem, 210
Notation, polar, 35
Notation, rectangular, 35
Notch filter, 172
Null meter, 292
Number, complex, 19, 23, 263
Number, imaginary, 37
Number, real, 37
Number, scalar, 23, 263

Octave, 9
Ohm's Law, 17, 74, 84
Ohm's Law , 55
Oscillation, 105
Oscillator, 115
Oscilloscope, 8
Overtone, 127, 292

p, symbol for instantaneous power, 50, 70
P, symbol for true power, 263
Parallel analysis, 88
Parallel circuit rules, 84
Parallel LC resonance, 109
Peak, 11
Peak-to-peak, 11
Pendulum, 103
Period, 8
Phase, 18
Phase rotation, 237
Phase sequence, 238
Phase shift , 18
Phase shift, vector, 26
Phase, transformer, 198
Piano, 9
Piezoelectricity, 282
Pitch (musical), 8
Polar notation, 35
Polarity, AC, 30, 47, 228
Pole, alternator, 236
Polyphase, 231, 234
Potential transformer, 214, 279
Potentiometer, 297
Powdered iron core, 222
Power factor, 259
Power factor meter, 270
Power quality, 290

Power quality meter, 291
Power triangle, 265
Power, apparent, 263
Power, negative, 52
Power, reactive, 263
Power, true, 263
Primary transformer coil, 4
PT, 214, 279
Pythagorean Theorem, 39

Q, quality factor, 283
Q, symbol for quality factor, 65
Q, symbol for reactive power, 263
Quality factor, 65
Quartz crystal, 282

R, symbol for resistance, 55, 74
Radio, 20, 67
Radio wave, 20
Ratio, transformer, 192
Reactance, capacitive, 70, 72
Reactance, inductive, 50, 52
Real number, 37
Rectangular notation, 35
Rectification, full-wave, 141
Rectification, half-wave, 139
Rectifier, 275
Rectifier, silicon-controlled, 138
Resistance, AC, 66
Resistance, DC, 66
Resistance, effective, 65
Resistor, multiplier, 279
Resistor, shunt, 279
Resonance, 106
Resonance, mechanical, 124, 280
Resonance, parallel, 107
Resonance, parallel LC, 109
Resonance, series LC, 111
Resonance, series-parallel, 116
Resonance, transformer and inductor, 223
Resonant filter, 174
Resonant frequency formula, 107
Resonant frequency meter, 282
Resonate, 106
Resultant vector, 46
RMS, 14, 277
Root-Mean-Square, 14, 277
Rotating magnetic field, 244
Rules, parallel circuits, 84
Rules, series circuits, 84
RVDT, 299

S, symbol for apparent power, 263
Saturable reactor, 218
Sawtooth wave, 10
Sawtooth wave , 152
Scalar number, 23, 263
SCR, 138
Secondary transformer coil, 4
Selectivity, 175
Selsyn, 299
Sequence, phase, 238
Series analysis, 83
Series circuit rules, 84
Series LC resonance, 111
Series-parallel analysis, 92, 100
SHM, 106
Silicon-controlled rectifier, 138
Simple Harmonic Motion, 106
Sine function, 6
Sine wave, 6
Single-phase, 225, 230
Sinusoidal, 10, 125
Skin effect, 64, 66, 121, 216
Sound waves, 8
Spectrum analyzer, 136, 291
Spectrum, frequency, 291
SPICE, 44
Split-phase, 229
Square wave, 10, 128
Standard, measurement, 282
Star configuration, 236, 247
Superposition Theorem, 156, 233
Switch, tap, 203
Synchro, 299

Tank circuit, 106, 207
Tap switch, 203
Tesla Coil, 216
Theorem, Maximum Power Transfer, 210
Theorem, Norton's, 210
Theorem, Pythagorean, 39

Theorem, Superposition, 156, 233
Theorem, Thevenin's, 210
Thevenin's Theorem, 210
Three-phase, 231, 234
Three-wire DC system, 231
Timbre, 127
Transducer, 297
Transductor, 220
Transform, Fourier, 134
Transformer, 3, 185
Transformer coils, primary and secondary, 4
Transformer core, laminated, 222
Transformer core, powdered iron, 222
Transformer isolation, 196
Transformer ratio, 192
Transformer, ferroresonant, 207
Transformer, step-down, 192
Transformer, step-up, 192
Transformer, variable, 202, 298
Transistor, 138
Triangle wave, 10
Triangle wave , 151
Triangle, power, 265
True-RMS meter, 14
Tube, vacuum, 201
Tuner circuit, radio, 115, 177

Unit, CPS, 8
Unit, farad, 70
Unit, henry, 50
Unit, Hertz, 8
Unit, joule, 290
Unit, volt-amp, 221, 263
Unit, volt-amp-reactive, 263
Unit, watt, 263

VA, 263
Vacuum tube, 201
Value, instantaneous, 49, 69
VAR, 263
Variable capacitor, 301
Variable transformer, 202, 298
Variac, 204
Vector, 23, 263
Vector amplitude, 26
Vector angle, 35
Vector length, 35
Vector magnitude, 35
Vector modulus, 35
Vector phase shift, 26
Vector sum, 46
Vector, absolute value, 35
Vibrating reed frequency meter, 281
Volt-amp, 221, 263
Volt-amp-reactive, 263
Voltage polarity, AC, 30, 47, 228
Voltage regulation, 205
Voltage, common-mode, 197
Voltage, line, 248
Voltage, phase, 248
Voltmeter, 275

Watt, 263
Wave, electromagnetic, 20
Wave, sawtooth, 10, 152
Wave, sine, 6
Wave, square, 10, 128
Wave, triangle, 10, 151
Waveform, nonsinusoidal, 125
Waveform, sinusoidal, 125
Weston meter movement, 14
Wheatstone bridge, 282
Wien bridge circuit, 295
Winding, primary, 187
Winding, secondary, 187
Wire, Litz , 65

X, symbol for reactance, 52, 55, 72, 74
Xtal, 283

Y configuration, 236, 247

Z, symbol for impedance, 54, 55, 74, 75