FM 34-10

NOVEMBER
1986

DIVISION INTELLIGENCE AND ELECTRONIC WARFARE OPERATIONS

HEADQUARTERS DEPARTMENT OF THE ARMY

DISTRIBUTION RESTRICTION: "Approved for public release; distribution is unlimited."

FIELD MANUAL
NO. 34-10

HEADQUARTERS
DEPARTMENT OF THE ARMY
Washington, DC, 25 November 1986

DIVISION INTELLIGENCE AND ELECTRONIC WARFARE OPERATIONS

Table of Contents

PAGE

Preface iv

Chapter 1. **The Intelligence and Electronic Warfare Mission** 1-1

Intelligence and Electronic Warfare System 1-1
Electronic Warfare and Counterintelligence Operations 1-4

Chapter 2. **Organizations and Intelligence Resources** 2-0

Combat Aviation Brigade 2-2
Division Artillery 2-3
Air Defense Artillery Battalion 2-4
Combat Engineer Battalion 2-4
Military Police Company 2-4
Division Support Command 2-5
Signal Battalion 2-5
Military Intelligence Battalion (CEWI) (Heavy Division) 2-5
Military Intelligence Battalion (Airborne/Air Assault Divisions) 2-13
Military Intelligence Battalion (Light Division) 2-19
Echelons Above Division Military Intelligence Support 2-23

Chapter 3. **Command and Control** 3-0

Planning and Management 3-0
Division C^2 Organizations and Facilities 3-1
MI Battalion C^2 Organizations and Facilities 3-14
Command and Control Communications 3-30
Command and Control Differences in the Light, Airborne, and Air Assault Divisions 3-45

DISTRIBUTION RESTRICTION: 'Approved for public release; distribution is unlimited.'

*This publication supersedes FM 34-10 (HTF), 3 July 1981; FM 34-11, 24 July 1981; FM 34-12, 30 September 1982; and TC 100-33, 28 September 1979.

Chapter 4. **Preparation for Combat** 4-1

Intelligence and Electronic Warfare Planning 4-1
Intelligence and Electronic Warfare Management 4-7

Chapter 5. **Combat Operations** 5-0

Intelligence and Electronic Warfare Support During Deployment 5-1
Intelligence and Electronic Warfare Support to Combat Operations 5-1
Intelligence and Electronic Warfare Support to Offensive Operations 5-9
Intelligence and Electronic Warfare Support to Defensive Operations 5-16
Intelligence and Electronic Warfare Support to Retrograde Operations 5-25
Intelligence and Electronic Warfare Support to Combined Arms Operations 5-26

Chapter 6. **Combat Service Support** 6-1

Command and Control 6-1
Coordination 6-4
Food Service 6-4
Supply 6-5
Maintenance, Repair, and Recovery 6-8
Other Combat Service Support 6-11

Chapter 7. **Training** 7-1

Battle Focus 7-1
Training Areas 7-1

Appendix A. **Intelligence and Electronic Warfare Report Formats** A-1

Communications Intelligence Advisory Tasking Message A-1
Daily Intelligence Summary A-2
Electronic Intelligence Requirement Tasking Message A-3
Electronic Warfare Approval Message A-4
Electronic Warfare Employment Message A-5
Electronic Warfare Mission Summary A-6
Electronic Warfare Requesting/Tasking Message A-8
Intelligence Report A-10
Intelligence Summary A-12
Meaconing, Intrusion, Jamming, and Interference Feeder A-14
NBC-1 Report A-15
Request for Information A-16
Response to Request for Information A-17

Signals Intelligence/Electronic Countermeasures Planning/Coodination Message A-18
Sensitive Information Summary A-19
Situation Report A-21
Tactical Report A-23
Intelligence Estimate A-23
Intelligence Annex A-38
Analysis of the Battlefield Area A-41

Appendix B. **Published Under Separate Cover**

Appendix C. **Briefing Techniques** C-0

Information Briefing C-0
Decision Briefing C-1
Staff Briefing C-2
Mission Briefing C-3
Briefing Pointers C-4

Appendix D. **Special Operations and Environments** D-1

Intelligence and Electronic Warfare Operations in the Mountains D-1
Intelligence and Electronic Warfare Operations in the Desert D-3
Intelligence and Electronic Warfare Operations in the Jungle D-5
Intelligence and Electronic Warfare Operations in the Winter D-6
Intelligence and Electronic Warfare Operations on Urbanized Terrain D-7
Intelligence and Electronic Warfare Operations at Night D-9
Intelligence and Electronic Warfare Operations in a Nuclear, Biological, and Chemical Environment D-10

Glossary Glossary-1

References References-1

Index Index-1

Preface

Intelligence and electronic warfare (IEW) operations enable the division commander to ght the air-land battle. Intelligence helps him to see the battlefield and the enemy—and mploy division resources when and where they can achieve decisive results. Counterintelli- ence (CI) protects the division from the enemy multidisciplined intelligence collection threat nd from subversion, sabotage, and terrorism. Electronic warfare (EW) degrades the enemy's apability to control and coordinate combat resources and reduces the effectiveness of enemy ombat power at the critical time and place on the battlefield. Division operations are de- cribed in FM 100-5.

This manual defines doctrine for division IEW operations. It describes how the IEW sys- em is structured, and how it operates to support division combined arms operations. It ddresses the role of division commanders and staff officers and officers, warrant officers, nd noncommissioned officers (NCOs) in functional IEW positions within the division.

The proponent of this publication is HQ TRADOC. Submit changes to this publication on A Form 2028 (Recommended Changes to Publications and Blank Forms) and forward it to ommander, US Army Intelligence Center and School, ATTN: ATSI-TD-PAL, Fort luachuca, Arizona 85613-7000.

Unless otherwise stated, whenever the masculine gender is used, both men and women are ncluded.

CHAPTER 1

The Intelligence and Electronic Warfare Mission

The division commander directs, coordinates, and supports subordinate unit operations against enemy first-echelon regiments in support of the division's close operations. Simultaneously, he attacks enemy forces, supporting or sustaining enemy forces engaged in close operations, and interdicts enemy second-echelon and follow-on forces to prevent them from closing on and influencing the close operations. He takes actions necessary to secure his rear and sustain his combat capabilities by conducting rear operations as required. To successfully conduct all operations of the air-land battle, it is imperative that the IEW system provide accurate information in sufficient time to allow the commander to reach a decision, prepare orders, and execute his plan. Additionally, EW represents another element of combat power which must be incorporated with fire and maneuver plans. Finally, CI protects the force and its operations by denying the enemy the information he needs to effectively conduct his operations.

The IEW system produces both intelligence and combat information required to support operations. The definition of these terms are as follows:

- Intelligence: the product resulting from the collection, evaluation, analysis, integration, and interpretation of all available information which concerns one or more aspects of foreign nations or of areas of operations and which is immediately or potentially significant to military planning and operations.
- Combat Information: unevaluated data, gathered by or provided directly to the tactical commander which, due to its highly perishable nature or the criticality of the situation, cannot be processed into tactical intelligence in time to satisfy the user's tactical intelligence requirements.

INTELLIGENCE AND ELECTRONIC WARFARE SYSTEM

The IEW system supports the commander by accomplishing four major tasks: situation development, target development, EW, and CI. These tasks are shown in the following illustration.

The first major task is situation development (sometimes referred to as predictive intelligence). In the situation development process, the intelligence analyst takes information collected from all sources under differing circumstances and concludes the enemy's most probable courses of action. Who, what, when, where, and in what strength are the questions the analyst is trying to answer as he accomplishes the situation development task. To assist the analyst, a method of integrating information concerning the enemy, weather, and terrain to draw a reasonable conclusion has been developed called intelligence preparation of the battlefield (IPB). IPB procedures are covered in Chapter 4 of FM 34-3.

IEW MAJOR SUPPORT TASKS

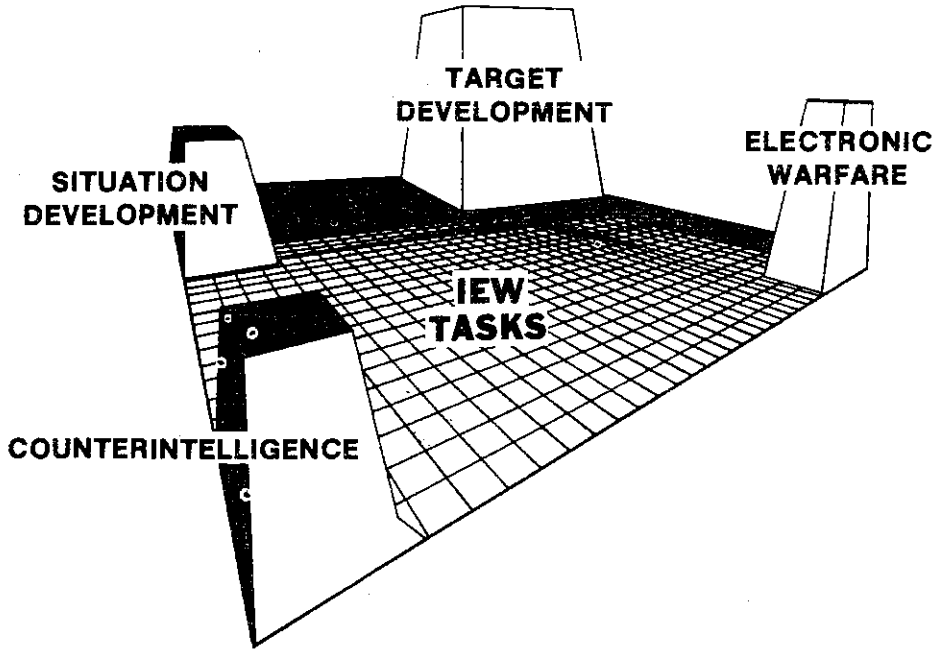

The second major task is target development. A significant problem on the air-land battlefield is selecting targets for attack with either lethal (artillery, air, maneuver) or nonlethal (EW or deception) measures. The target development process is employed to provide target locations and to cope with the dilemma of having too many targets with too few attack assets. Target development segregates targets by their potential in terms of hindering the enemy's intended course of action and assisting the friendly course. High value targets (HVTs) are directly related to forces or facilities critical to the enemy commander and his desired course of action. They are not necessarily targeted for destruction. HVTs are developed by the G2 intelligence staff and are refined in conjunction with the intelligence estimate as HVT lists associated with each possible enemy course of action. HVT lists are used by the G3 and fire support element (FSE) in developing friendly courses of action and associated fire support plans and in selecting high payoff targets (HPTs) from HVT lists through weaponeering or weapons pairing functions. HPTs, ultimately approved by the commander, are used to focus both the G2's collection effort and the maneuver and attack efforts of the G3 and fire support coordinator (FSCOORD). Target development procedures are outlined in detail in FM 34-3.

The third major task is EW, consisting of EW support measures (ESM), electronic countermeasures (ECM), and electronic counter-countermeasures (ECCM). ESM and ECM are sometimes referred to as offensive EW. ESM are actions taken to search for, intercept, locate, and identify sources of radiated electromagnetic energy (tactical radios, radars, and so forth) for immediate use on the battlefield. ESM produces combat information and can be used with little systematic analysis. ECM are actions taken to prevent or reduce effective use of the electromagnetic spectrum by the enemy. ECM includes both jamming and electronic deception. ECCM are actions taken to retain friendly use of the electronic spectrum. Some of these actions are emission control, operator training, and frequency control. Further details on EW can be found in FM 34-40.

DISRUPT

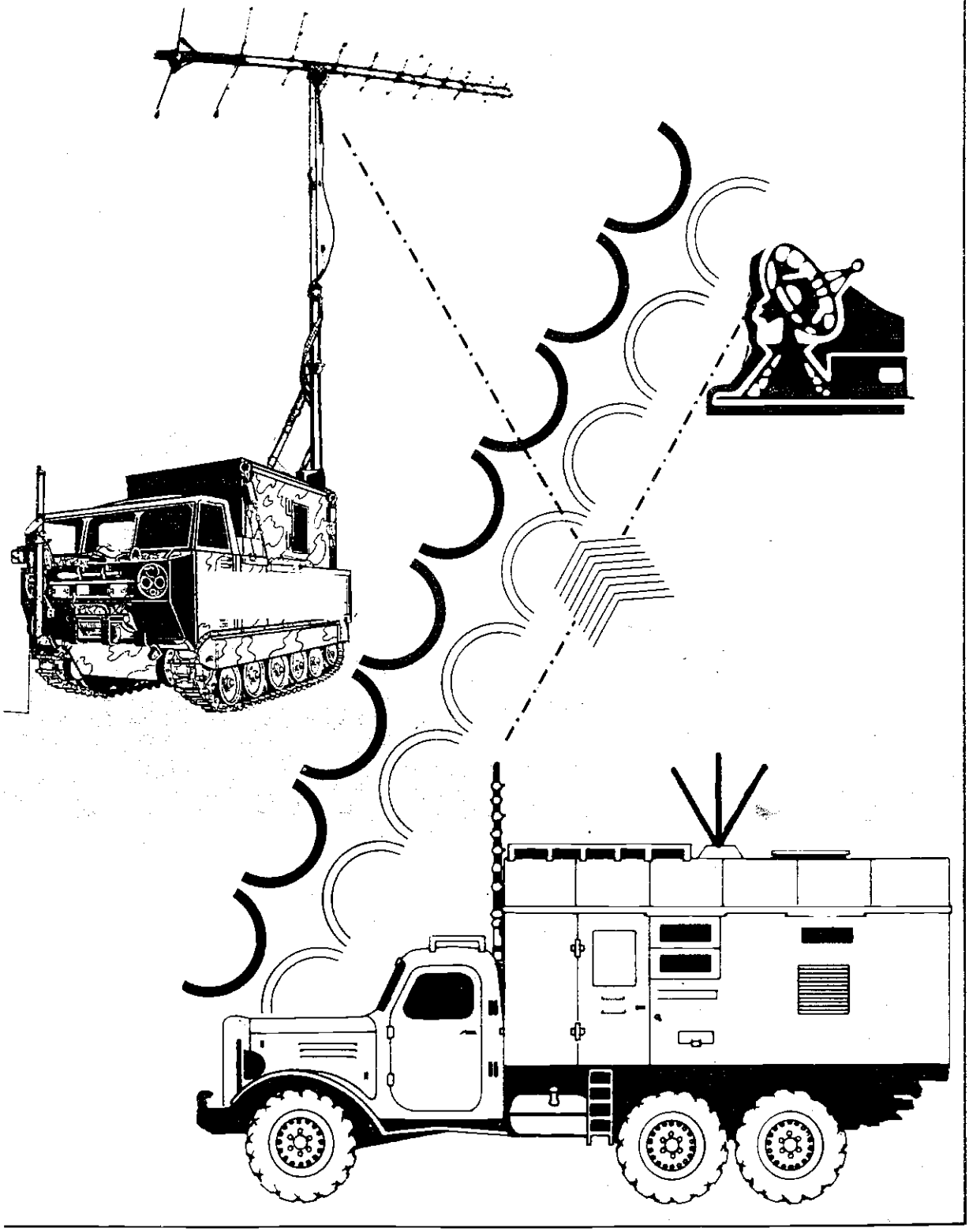

Deception contributes to surprise which acts as a powerful combat multiplier. Battlefield deception leads the enemy to make decisions or take actions which are not in their best interest. Electronic deception includes simulative electronic deception (SED), manipulative electronic deception (MED), and imitative electronic deception (IED). Greater detail on electronic deception can be found in FM 34-1 and FM 34-40. The deceive component of the C^3CM strategy may include electronic deception as part of the overall deception effort. Deception portrays the false, by denial of information to the enemy. Defend protects the real (see the following illustration).

DECEIVE

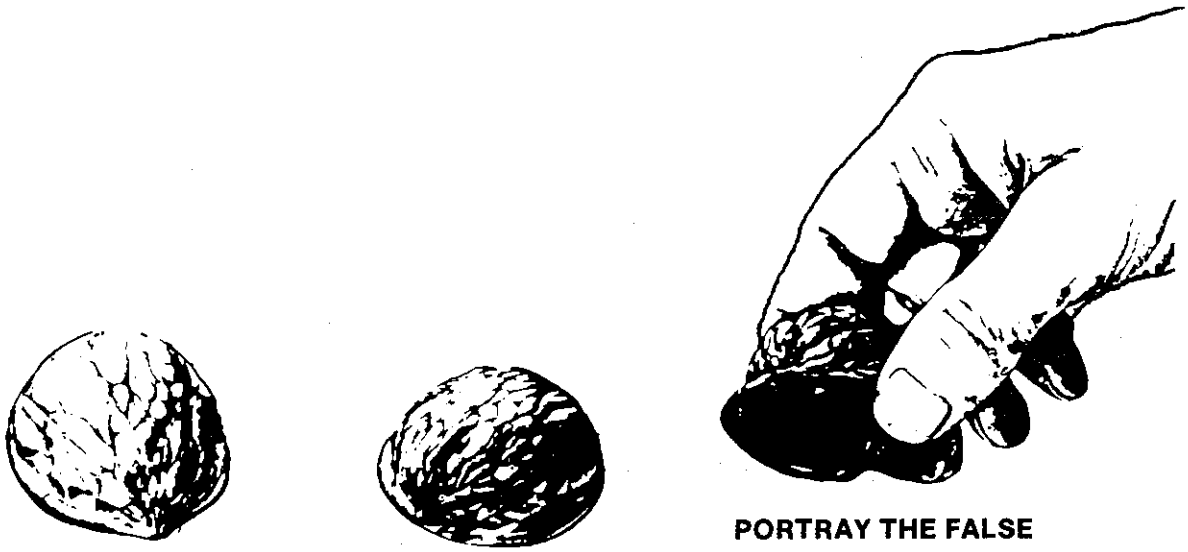

Defend protects friendly C^3 and denies the enemy vital information he needs to destroy, disrupt, or deceive. This is accomplished through OPSEC programs and through CI activities such as counter-HUMINT, counter-SIGINT, counter-IMINT, and counter-MASINT.

DEFEND

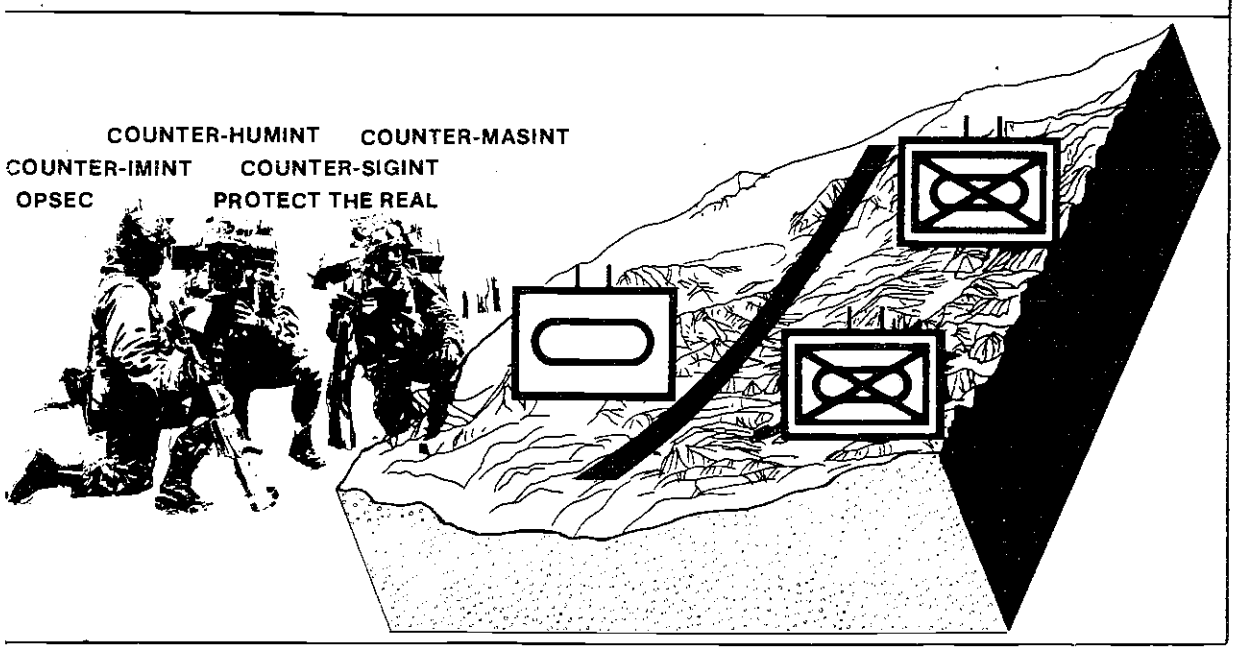

An effective C³CM strategy is entirely dependent on accurate and timely intelligence support. Situation and target development support the planning and direction of C³CM. EW can be a major contributor in degrading enemy C³, and CI is the cornerstone of deception and denying the enemy a C³CM capability. C³CM can now easily be equated with the four military mission areas supported by intelligence (see the following illustration).

MILITARY MISSION AREAS

FUNCTION	MISSION
DESTROY	PHYSICAL DESTRUCTION
DISRUPT	JAMMING
DECEIVE	MILITARY DECEPTION
DEFEND	OPSEC

C³CM is not a new mission area, rather, C³CM activities are accomplished as part of the strategy and tactics of normal military operations.

The division's organic intelligence assets are pulled together to collect, process, and produce all-source intelligence. This intelligence, in addition to normal combat information reporting, is used to satisfy the commander's informational and operational requirements. Brigades and battalions may have IEW assets supporting them, but for the most part, they depend on processed information from division to support their conduct of deep and rear operations. The division's deep operations prevent second-echelon divisions and regiments from closing with friendly forces in the main battle area (MBA) to achieve mass and influence close operations. In addition to information on second-echelon division locations and intentions, information on regimental locations, strengths, capabilities, activities, movement, and intentions are examples of division informational needs. To support close operations, the division's deep operations focus on enemy second-echelon regiments of the first-echelon divisions and second-echelon or follow-on divisions. IEW supports the commander throughout all four dimensions of the battlefield: width, depth, airspace (height), and time. The air-land battlefield has distinct geographical areas used as friendly control measures which consider the four dimensions of the battlefield and aid in accomplishing the IEW mission. These areas are the area of operations (AO) and area of interest, and are defined as follows:

- The AO is that portion of an area of conflict necessary for military operations. It is assigned to a maneuver commander by the next higher commander.
- The area of interest is that area of concern to the commander, including the area of operations, areas adjacent thereto, and extending into enemy territory beyond the objectives of current and planned operations. This area also includes areas occupied by enemy forces who could jeopardize the accomplishment of the mission.

CHAPTER 2

Organizations and Intelligence Resources

Every unit in the division has an implied ıission to report information about the ıemy and terrain. Additionally, divisional nits are assigned collection missions based n their primary mission, capabilities, and ıcation on the battlefield. While military ıtelligence (MI) units are structured spe- ifically to provide IEW support, non-MI nits provide a great deal of targeting and ;her combat information.

Frontline troops and reconnaissance atrols of maneuver brigades collect infor- ıation on enemy units which they are in ontact with. The cavalry squadron of the ombat aviation brigade (CAB) also per- ›rms ground reconnaissance, while avia- on elements of the CAB collect informa- on on the battlefield as they fly their ıissions. Through countermortar and ounterbattery radar which track the trajec- ›ry of enemy artillery rounds, division rtillery (DIVARTY) assets locate enemy rtillery. Division artillery forward bservers also report combat information as ıey observe the battlefield.

Air defense units observe and report con- ;ntrations of enemy aircraft, and air corri- ors in use. Engineer units collect informa- tion on the terrain and on the terrain effects on the movement of enemy and friendly forces.

In the division's rear area, the military police company and elements of the division support command (DISCOM) observe and report enemy activity, whether low level sabotage or terrorism, or larger enemy combat elements. The signal battalion reports enemy jamming efforts, also contributing to the intelligence data base.

The division's MI battalion performs multidisciplined intelligence collection throughout the division area. It performs HUMINT collection through interrogation of captured enemy soldiers and through deployment of long-range surveillance teams. Other assets intercept signals from enemy emitters to develop intelligence, and ground surveillance systems search the battlefield for moving targets.

This chapter describes the IEW resources available to support the division with emphasis on the MI battalion (see the following illustration). For a detailed review of individual sensors found within all units of the division, see FM 34-80.

DIVISION RESOURCES

RESOURCE	NOMINAL RANGE[1] (10km 20km 30km 40km 50km 60km)
BRIGADES/BATTALIONS	
Frontline Troops	
Recon Patrols	
COMBAT AVIATION BRIGADE	
Ground Recon	
Aerial Recon	
COMINT[2]	
DIVARTY	
Visual Observation	
MTI Radar	
CM/CB Radar	
FA Aerial Observers	
ADA BATTALION	
Visual Observation	
Radar	
ENGINEER BATTALION	Within visual LOS of assigned elements
MP COMPANY	Within visual LOS of assigned elements
DISCOM	Within visual LOS of assigned elements
MI BATTALION	
Interrogation[3]	
CI[3]	
LRS Detachment	
COMINT	
ELINT	
Ground Surv Radar	
-Vehicles	
-Personnel	

1 Range for planning purposes. Actual range depends on terrain, weather, enemy deployment, and location of friendly sensor.
2 Employed under OPCON of MI battalion.
3 Range indefinite; based on information obtained through exploitation of HUMINT sources.

COMBAT AVIATION BRIGADE

The combat aviation brigade (CAB) provides all aviation support to the division. It assists in conducting sustained combat operations throughout the depth of the division's AO. The CAB is a maneuver brigade and controls either air or air and ground maneuver forces. It also provides combat support aviation forces to other divisional units such as the QUICKFIX flight platoon deployed under the operational control (OPCON) of the MI battalion (combat electronic warfare and intelligence (CEWI).

The CAB of the mechanized and armor divisions is organized as shown in the following illustration.

CAB ORGANIZATION

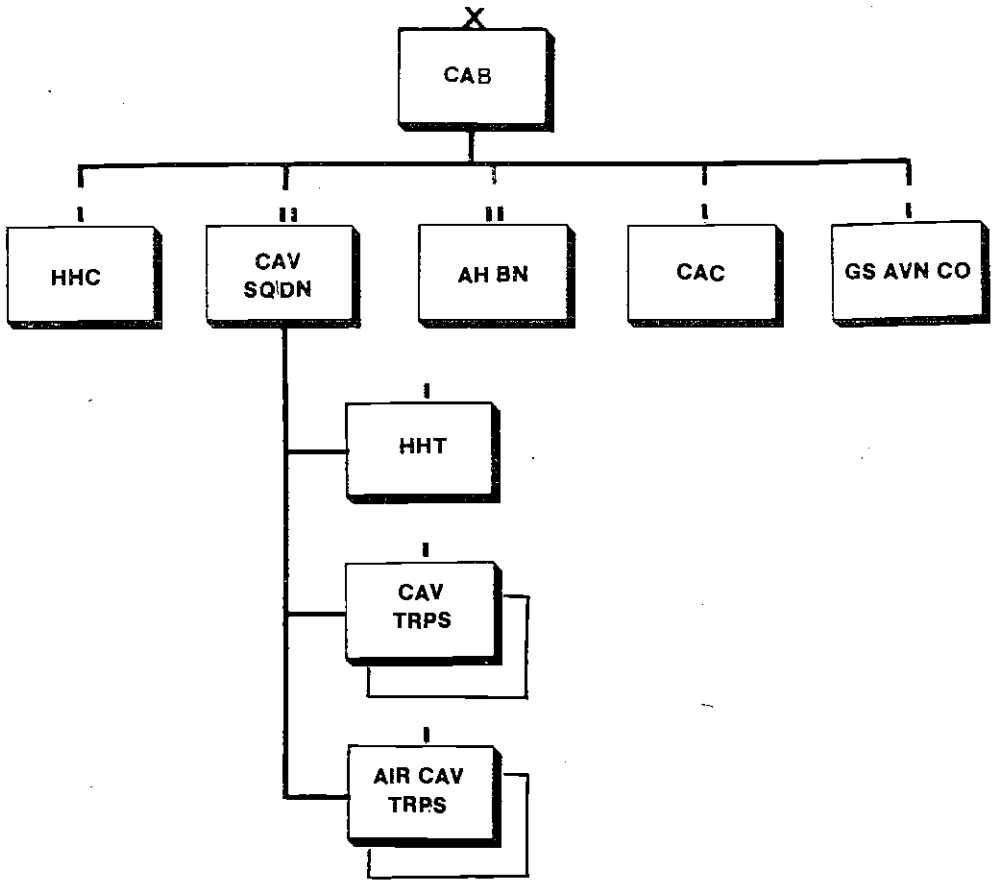

The CAB finds, fixes, and destroys enemy armored and mechanized forces by observation, fire, and maneuver. As a result of its ground and air capabilities, the CAB performs ground and air reconnaissance, aerial visual surveillance, air assault, and air mobile missions. Additionally, aviation assets assigned to the general support (GS) aviation company provide command, control, liaison, aerial observation, and airborne communications intercept, DF, and ECM capabilities to divisional units.

CAVALRY SQUADRON

The cavalry squadron performs ground and air reconnaissance, surveillance, and security or screening missions.

ATTACK HELICOPTER BATTALION

The attack helicopter battalion provides aerial escort, air observation and attack, and suppressive fires to support air assault operations. Air attack missions include those directed against key enemy C^3 facilities, logistics centers, and enemy formations engaged as part of the division's close operations. Attack helicopters are capable of cross-FLOT, deep operations with coordination for the suppression of enemy air defense weapon systems, and joint air attack team (JAAT) operations with close-air support aircraft against critical targets.

GENERAL SUPPORT AVIATION COMPANY

The GS aviation company provides OH-58C observation aircraft to the division artillery (DIVARTY) for use by the field artillery aerial observers (FAAO) in directing indirect fires against enemy targets. Additionally, the GS aviation company provides the QUICKFIX flight platoon with airborne communications intercept, DF, and ECM aircraft deployed under the OPCON of the MI battalion.

When CAB units are deployed in GS of the division, combat information received from the ground and airborne reconnaissance and surveillance missions is introduced into the CAB tactical intelligence system through normal operations and intelligence reporting channels within the CAB. When CAB subordinate units are deployed in support of other divisional units, combat information and intelligence derived from their operations are reported directly to the supported unit. As the QUICKFIX flight platoon is deployed under the OPCON of the MI battalion, operational intelligence reports transmitted from QUICKFIX collection missions are reported directly to the technical control and analysis element (TCAE) of the MI battalion for SIGINT analysis and dissemination within the division.

The CAB's extensive ground and airborne surveillance capabilities represent a substantial portion of the division's combat information collection capability. Intelligence planning, to include a thorough collection plan which includes detailed reconnaissance and surveillance planning, must focus on and identify the critical PIR and IR which the CAB may be best capable of satisfying.

DIVISION ARTILLERY

DIVARTY is uniquely suited to acquire combat targeting information through fire support coordinating agencies. It acquires targets using—

- ☐ Visual observation.
- ☐ Moving-target radars.
- ☐ Weapon-locating radars.

DIVARTY primarily collects targeting information for its own use. Its elements also provide information to maneuver and other units of the division and feed information into the division IEW system at all echelons from company to the division FSE. Fire support teams (FIST) and field artillery (FA) aerial observers pass target information via fire support channels to the maneuver unit it supports which, in turn, passes it up through intelligence and fire support channels. Target information developed through intelligence operations that reaches the DIVARTY tactical operations center (TOC) is fed into the tactical fire direction system (TACFIRE).

'he division FSCOORD, G2, and G3 form team which plans the division's overall geting effort. The all-source production tion (ASPS) supports targeting through get value analysis (TVA), target develnent, and IPB.

AIR DEFENSE ARTILLERY BATTALION

'he air defense artillery (ADA) battalion quipped with air defense target acquisi- ı radars that allow early warning of my air activity to the division. The batson also provides information about air tes into the division AO and enemy air ivity in the division sector, as well as tistical data about the destruction of my aircraft.

'he ADA battalion receives information l intelligence from Army intelligence ts, Air Force elements, Army theater and ps ADA units, and subordinate ADA ts. An air defense coordination section n the division ADA battalion acts as son for coordination with the nearest rce of high-to-medium air defense MAD) or Air Force information center. s center screens the information for the ision ADA battalion. At the ADA battal-, this information goes into the Manual ort-Range Air Defense Control System SCS). From there it is transmitted to the ward area alerting radar (FAAR) that ports air defense firing units. When one he FAAR firing units gathers early ning information and statistical data, it orts the information to its battery CP. battery CP then reports to the supted brigade S2 and the division ADA talion S2 and S3.

he ADA battalion uses the IEW system xtract current terrain and weather rmation that pertains to friendly and my air and air defense effectiveness. y also use the system for current enemy ations and order of battle (OB) data for nning and operational purposes.

COMBAT ENGINEER BATTALION

The divisional combat engineer battalion conducts reconnaissance missions to support mobility, countermobility, and general engineering tasks. Mobility tasks are hasty and deliberate route, bridge, aerial, and special reconnaissance. The battalion also reconnoiters assault bridge crossing sites and conducts river reconnaissance. The countermobility task is primarily a reconnaissance for obstacle locations. General engineering tasks include construction site reconnaissance, construction surveying, and bridge site reconnaissance.

Combat engineer companies can provide DS to, be attached to, or under OPCON of the maneuver brigades or task forces, and in each case, the companies report terrain information directly to the supported maneuver unit. Combat information is forwarded to the division through intelligence channels. At division, the assistant division engineer (ADE) compiles and forwards the information to the combat engineer battalion TOC, other engineers operating in the division area, and the G2. In some cases, the information may be passed directly to the battalion TOC if the communication channel is available.

MILITARY POLICE COMPANY

The military police (MP) company is responsible for order and discipline; the collection, movement, and control of enemy prisoners of war (EPW); and traffic control throughout the division AO. They establish and ensure physical security at the division EPW cage. Information on prisoner behavior, rear operational activities, and terrorism is collected by military police during tactical operations.

The MP company plans rear operations against level I and II enemy forces in coordination with the rear area operations center (RAOC). Military police are a major contributor and user of intelligence concerning the division rear area.

DIVISION SUPPORT COMMAND

Division support command (DISCOM) elements operating in the division rear include its main support battalion, material management center (MMC), and tactical aircraft maintenance company (TAMC). These elements make extensive use of road networks within the division rear. They provide valuable information about lines of communication (LOC), guerrilla activity, and weather and terrain conditions. DISCOM elements report information via the normal chain of command back to the DISCOM S2 over the DISCOM intelligence net.

DISCOM exchanges information and intelligence with other elements operating in the division rear area. The military police exchange information gained from their traffic control points (TCP) directly with DISCOM S2 in the RAOC. In addition, the DISCOM's intelligence interests are evaluated by the DTOC G2. As the DTOC receives information and intelligence of special interest to the DISCOM, it passes it via operations and intelligence channels to DISCOM. The DISCOM elements in the division rear are critical as they may be the first units to observe and report enemy activity that impacts significantly on the division's rear operations.

DISCOM also has three forward support battalions which operate in the brigade rear areas. These battalions provide information on enemy activity, weather, and terrain within the brigade rear areas. They frequently are the first elements to identify level I and II threats to the brigades.

SIGNAL BATTALION

The division signal battalion is responsible for establishing and maintaining communications with the division CPs, brigade CPs, and major subordinate elements of the division. Communication is provided to as low as the brigade level of command. The division signal battalion also coordinates with the division G2 on the evaluation of enemy signal equipment and receives meaconing, intrusion, jamming, and interference (MIJI) reports from subordinate elements, and after friendly, inadvertent interference has been ruled out as the source of interference, forwards them to the G2 or MI battalion for processing.

Elements of the signal battalion that are collocated with major subordinate headquarters such as a brigade, report information of an intelligence nature to the brigade S2 and the signal battalion S2/S3. Signal battalion elements report combat information to the signal battalion S2 or S3.

MILITARY INTELLIGENCE BATTALION (CEWI) (HEAVY DIVISION)

The MI battalion provides dedicated IEW support to the division. It is organic to the division and operates under the command and direction of the division commander and his staff. It responds to missions assigned by the G2 and G3.

The MI battalion at division level is a four-company organization, with the exception of the MI battalion light infantry division, which has three companies. The internal structure of the MI battalion varies according to the division type. The MI battalion (CEWI) heavy division is organized as shown in the following illustration. Organizations of the airborne, air assault, and light infantry divisions' MI battalion are provided after the discussion of the MI battalion (CEWI) heavy division.

MILITARY INTELLIGENCE BATTALION (CEWI) (HEAVY DIVISION) ORGANIZATION

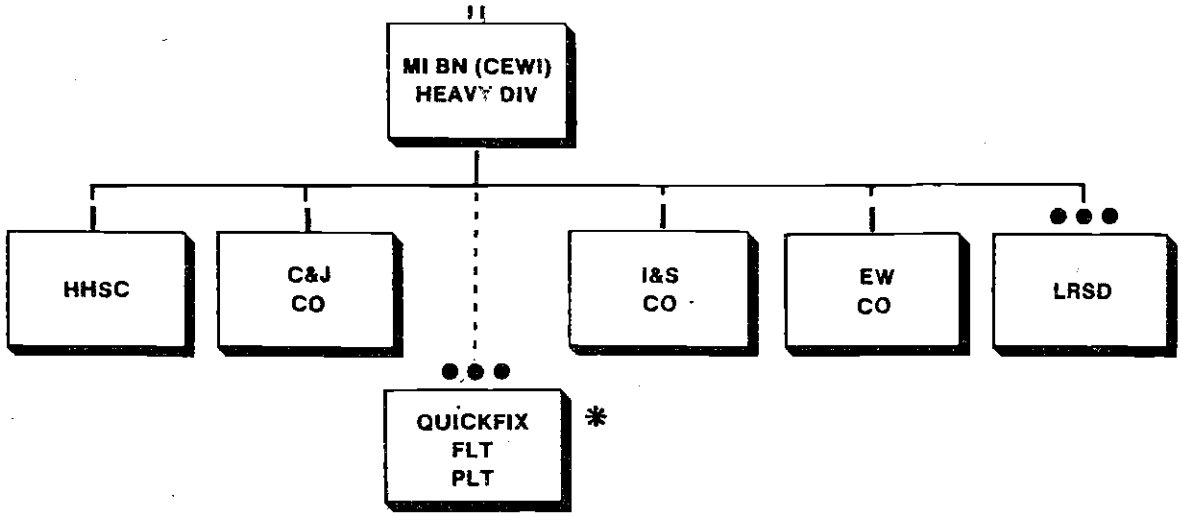

* Assigned to combat aviation brigade, OPCON to MI battalion.

HEADQUARTERS, HEADQUARTERS AND SERVICE COMPANY (HEAVY DIVISION)

The headquarters, headquarters and service company (HHSC) provides C^2 for headquarters elements of the battalion and elements under OPCON of the battalion. It also contains the elements which provide asset management for IEW operations and supplies technical control and analysis for EW operations (see the following illustration).

The company headquarters and service section provides C^2 and administrative support for the company. The command and staff sections provide C^2 for assigned and supporting elements, staff planning, and management of assets. Service support elements provide communications, Communications-Electronics (C-E) and mechanical maintenance, and food service support to the battalion. The communications platoon provides both radio teletypewriter (RATT) and landline record traffic capabilities. The communications center (COMMCEN) section provides a terminal in the division multichannel communications

HHSC ORGANIZATION

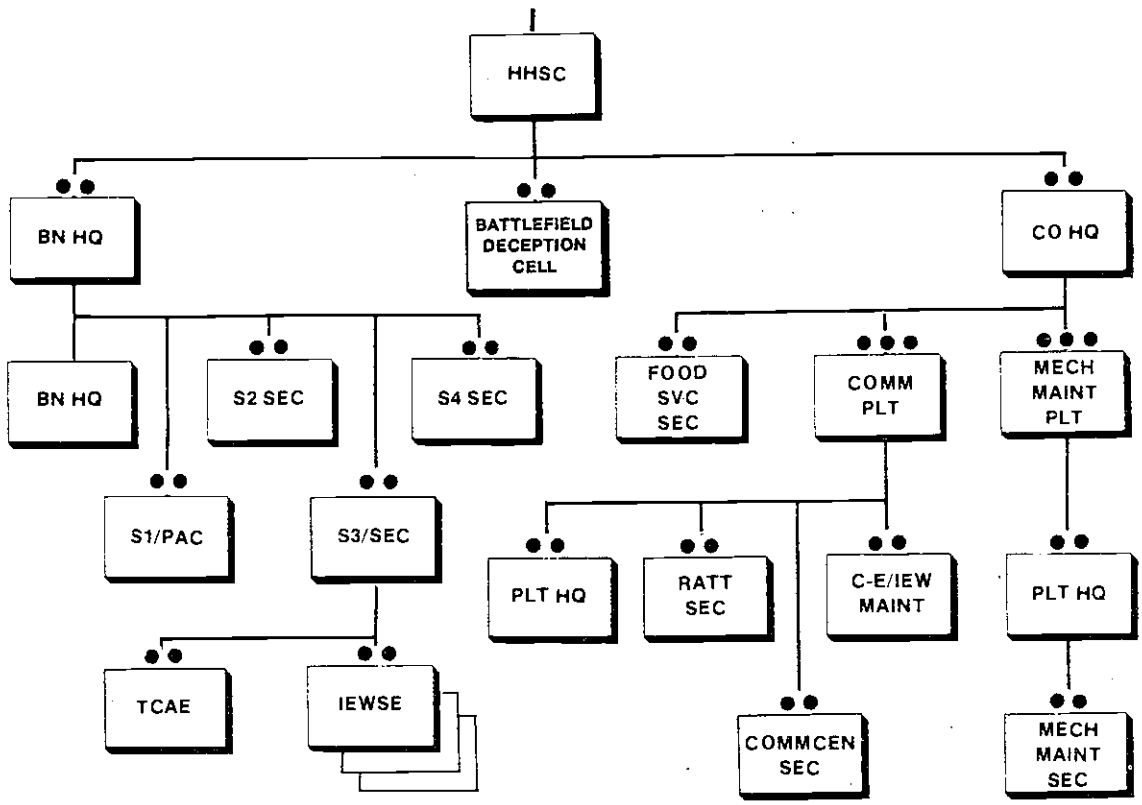

system. The C-E and IEW maintenance section services SIGINT, EW, and other C-E equipment. The mechanical maintenance platoon provides vehicle maintenance, tank and pump, and recovery support for the battalion. As the battalion task organizes into IEW company teams, assets of the IEW maintenance section and mechanical maintenance platoon are organized into teams attached to each company.

The MI battalion section includes three IEW support elements (IEWSEs) to support each brigade. These elements advise the brigade commander and staff on the integration and use of MI assets to support the brigade's battles. The IEWSEs are described in detail in Chapter 3.

Part of the battlefield deception cell operates at the DTOC, supporting the G3. It assists in the planning of deception operations. The balance of this cell is deployed to assist in execution of deception activities.

COLLECTION AND JAMMING COMPANY (HEAVY DIVISION)

The collection and jamming (C&J) com-
ny provides SIGINT and EW support to
e division. It is organized as shown in the
lowing illustration.

The C&J company provides communica-
ns intelligence (COMINT) collection, low-
el analysis, and communications jam-
ing. It also has organic RATT

Collection and Jamming Platoon Headquarters

The C&J platoon headquarters provides asset management for the platoon's collection, analysis, and jamming teams. It is the focal point for the tasking and reporting associated with platoon operations. It provides the interface between the TCAE and the C&J company as well as teams assigned to the platoon.

C&J COMPANY ORGANIZATION

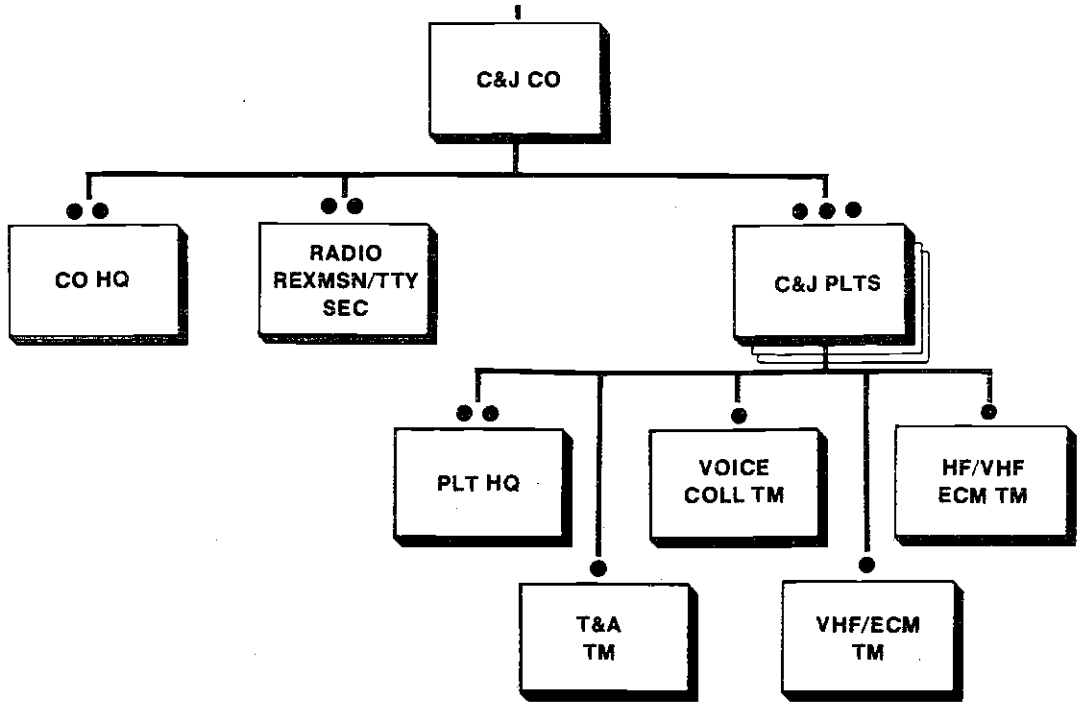

mmunications and frequency modulated
M) radio retransmission. The three C&J
atoons may be attached or detached by
e MI battalion to task organize the com-
ny to best accomplish the battalion mis-
on. C-E and mechanical maintenance
sets may be attached from HHSC when
e company is deployed.

Transcription and Analysis Team

The transcription and analysis (T&A) team is deployed as part of the C&J platoon headquarters. It performs selective scanning and gisting of voice intercepts recorded by collection teams. When necessary, extracts or complete translations of voice intercepts may be made. The team performs limited analysis. It reports acquired combat information to the TCAE via the C&J tasking and reporting net (FM-secure), which is monitored by the brigade

IEWSE for combat information. Technical data is also passed to the MI battalion TCAE via RATT.

Voice Collection Team

The voice collection team intercepts and gists HF and very high frequency (VHF) voice communications. It also has a limited capability to provide LOB information for intercepted transmission. Recordings, gists, and LOB data are sent to the T&A team for further processing and dissemination. The team has both vehicle-mounted and manpack collection receivers. The vehicle-mounted and manpack systems each provide HF, VHF, or a combination of the two. The team, however, is manned only for continuous operation of the two collection positions within the vehicle-mounted intercept system. The manpack system is deployed for short periods of time when a surge capability is required or the vehicle-mounted system is moving.

Electronic Countermeasures Teams

ECM teams are capable of jamming HF and VHF communications in support of close and rear operations and to a limited extent, the division's deep operations. They also perform ESM tasks when not tasked for ECM operations. Under extraordinary circumstances, the mission of team operations may be switched from attacking enemy communications to assisting friendly communications by providing voice message traffic with its high-powered transmitter.

INTELLIGENCE AND SURVEILLANCE COMPANY (HEAVY DIVISION)

The intelligence and surveillance (I&S) company provides the division ground surveillance, EPW interrogation, and limited CI capabilities. The I&S company is organized as shown below. C-E and mechanical maintenance assets may be attached to the company when it is deployed.

I&S COMPANY ORGANIZATION

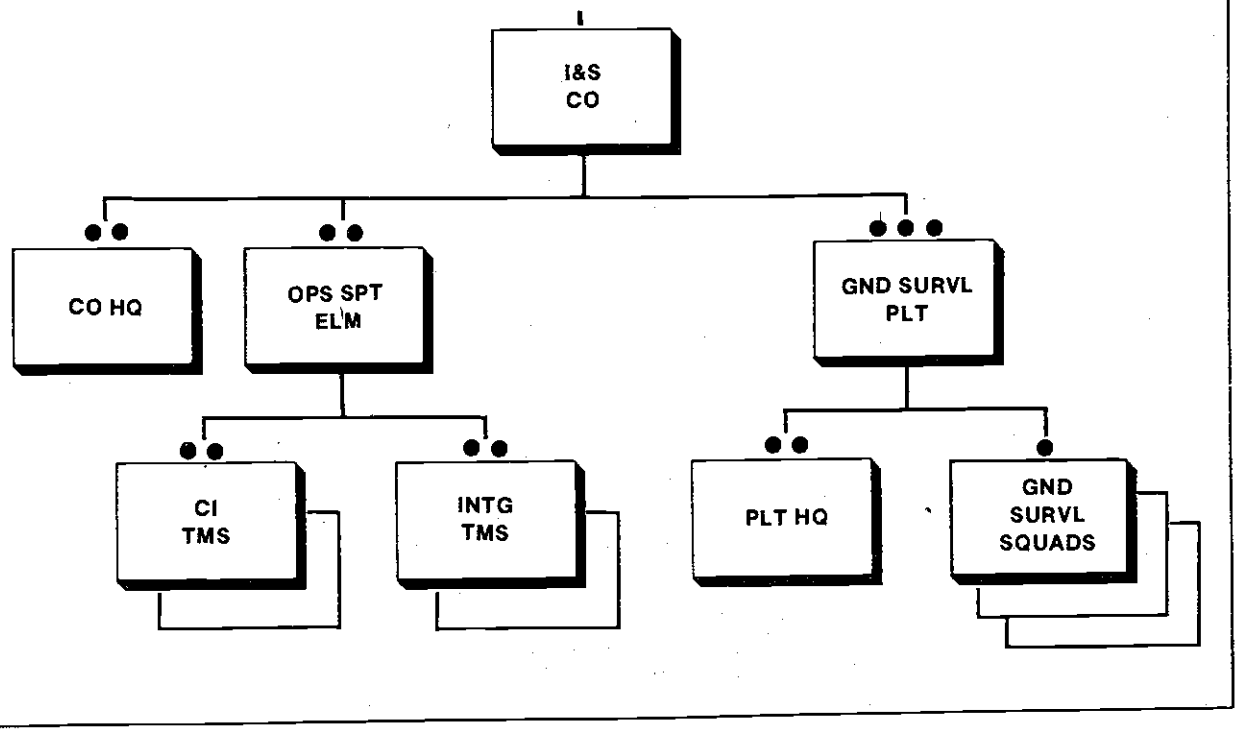

Company Headquarters

Headquarters provides command and ontrol for I&S company assets and may erve as a company team headquarters vhen so designated.

Operations Support Section

The operations support section provides nterrogation and CI operational teams vhich are tasked to process EPW and coun- er hostile intelligence collection, sabotage, ubversion, and terrorists threats. The CI eams also provide support to the division's)PSEC program as well as advice and ıssistance to security managers. The inter- ogation teams serve as the nucleus around vhich the division cage is formed and can ırovide limited prisoner of war interroga- ion (IPW) support at the brigade level. Corps augmentation is required to simul- aneously sustain division cage operations ınd to provide continued IPW exploitation ıt the brigade level. The division is heavily lependent on corps and echelons above orps (EAC) MI support for additional CI, ignals security (SIGSEC), and interroga- ion operations. These assets will normally ıe deployed in GS unless sufficient aug- ıentation is received from corps to place CI ınd interrogation teams in direct support DS) of brigades.

Ground Surveillance Platoon

The ground surveillance platoon is organ- zed into three ground surveillance radar GSR) squads, each with four AN/PPS-5 ISR teams. Ground surveillance assets ıay be attached to a brigade and further ttached to the battalion task force (BTF) ınd maneuver company teams. GSR assets ıay also be attached to the DISCOM or ear area elements for rear area surveil- ance. All support for GSR teams is pro- ided by the unit to which attached, less adar-unique maintenance, which is pro- ided by the MI battalion.

ELECTRONIC WARFARE COMPANY (HEAVY DIVISION)

The EW company provides SIGINT/ESM support to the division and subordinate elements. The company is capable of COMINT collection and DF. It also has noncommunications collection and manual DF capabilities. RATT communications support is organized within the company. The EW company is organized as shown in the following illustration.

The company headquarters provides overall C^2 of assigned and attached assets. It may also act as a company team headquarters when task organized.

The SIGINT processing platoon is equipped with the AN/TSQ-114 (TRAILBLAZER) COMINT collection/DF system and three TEAMPACK noncommunications collection and DF systems. The TRAILBLAZER system consists of two master control stations (MCSs) and three outstations. Variants of TRAILBLAZER may have five MCSs and no outstations. An analysis section is also organized within the platoon which provides for communications and noncommunications analysis.

Communications DF Teams

The platoon headquarters, with the analysis team, collocates with one of the MCSs, which then becomes the primary MCS. The primary MCS interfaces with the other MCSs and outstations via a system internal ultra high frequency (UHF) data link and reports intercepted traffic with DF locations to the MI battalion TCAE via a RATT interface with the primary MCS. The analysis section conducts preliminary analysis of intercepted traffic and reports to the TCAE by RATT or FM. It reports combat information to the TCAE for exploitation by fire or maneuver elements. The TCAE establishes the collection, DF, and reporting criteria. When the primary MCS reaches its storage capacity, primary control of the DF baseline may be transferred to the other MCS, thereby permitting continuous operations.

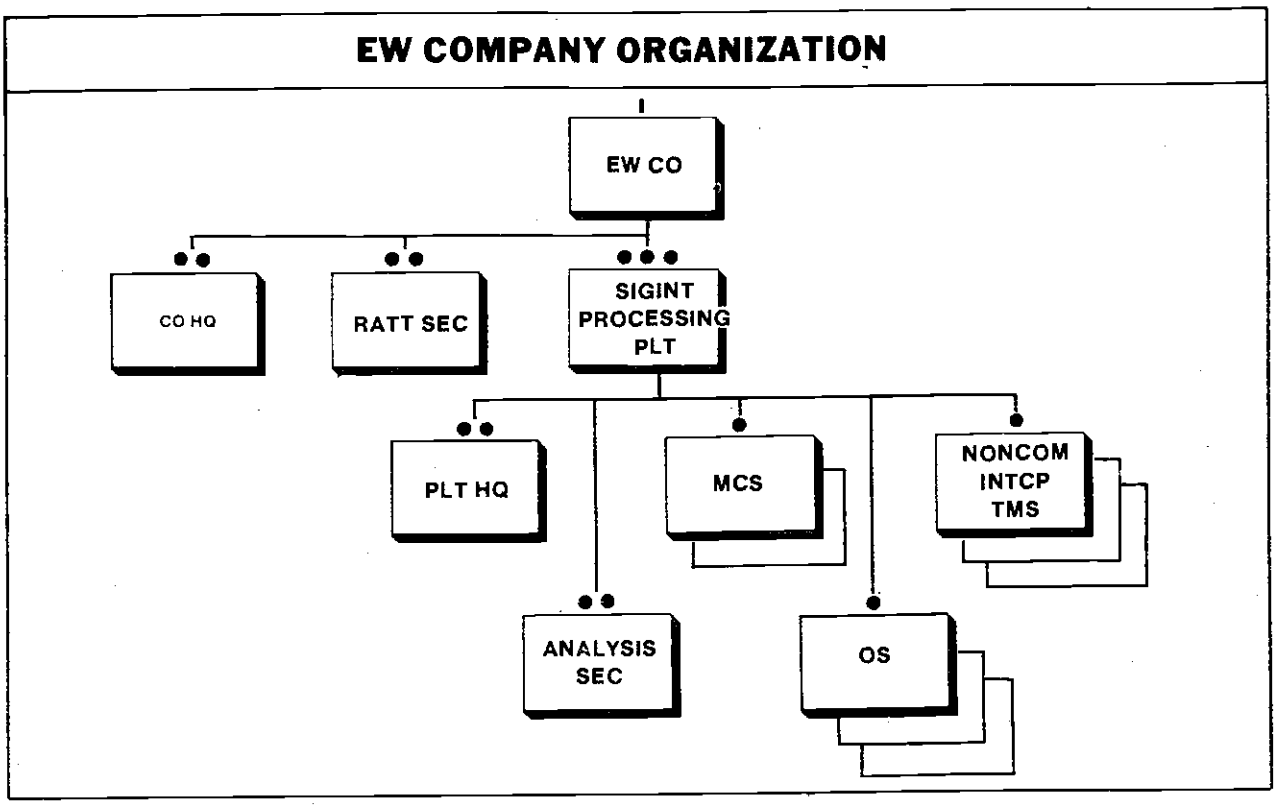

Noncommunications Intercept Teams

The noncommunications intercept teams are equipped with the AN/MSQ-103 (TEAMPACK) system capable of collecting intercept and LOB data from enemy noncommunications emitters. The systems must be located well forward near the FLOT due to line of sight (LOS) restrictions. The three teams may be dispersed throughout the division AO or be concentrated in a particular high-threat area according to mission requirements. A fix capability can be obtained if manual tasking of the three TEAMPACK systems is accomplished via FM radio. Noncommunications intercept operations are concerned primarily with enemy fire direction and target acquisition radars associated with FA and air defense weapons.

The TCAE may direct the manual coordination of this electronic intelligence (ELINT) system to locate enemy high-value radars. In this operation, the platoon headquarters coordinates the operation, receiving tasking and technical data from the TCAE and passing it to the intercept teams. It consolidates LOB data and forwards it to the TCAE. The TCAE analyzes the data to determine radar locations and reports combat information to the collection management and dissemination (CM&D) section within the G2 DTOC or the appropriate brigade IEWSE. The TCAE also correlates the data with intercept data from other sources, particularly COMINT, to template the battlefield from the standpoint of enemy electronic order of battle (EOB) parameters.

The SIGINT processing platoon normally supports the entire division as a GS asset. The platoon deploys its systems within brigade areas to ensure range and LOS to target emitters. Their operations must be coordinated closely with the brigades in whose AOs they are deployed.

LONG-RANGE SURVEILLANCE DETACHMENT

The formation of long-range surveillance ganizations within the division and corps ructure under the Army of Excellence .OE) represents the most significant ange in IEW support to forward maneu- r forces. The long-range surveillance de- chment (LRSD), division, provides collec- n by HUMINT means within the vision's areas of operations and interest, r planning purposes to a depth of 50 km yond the FLOT. It observes and reports emy dispositions, facilities, activities, d terrain and weather conditions. Specifi- lly, the LRSD—

- ☐ Conducts long-range collection through surveillance and reconnaissance operations.
- ☐ Determines and reports the location, strength, equipment, disposition, organization, and movement of enemy forces and determines the location of HPTs, to include nuclear, biological, and chemical (NBC) weapon delivery systems; nuclear weapon storage sites; reserves; C^3 facilities; and other key facilities such as airfields and ammunition supply points.
- ☐ Conducts damage assessment and NBC monitoring.
- ☐ Emplaces and employs unattended sensors and electronic intelligence and target acquisition and designation equipment.
- ☐ Employs photographic and night image enhancement devices.
- ☐ Obtains information on possible drop and landing zones for airborne and airmobile or air assault operations.
- ☐ Provides information on terrain and weather conditions.
- ☐ Provides an assessment of indigenous communication facilities for possible future allied use.

The LRSD is organized as shown in the following chart.

LRSD ORGANIZATION

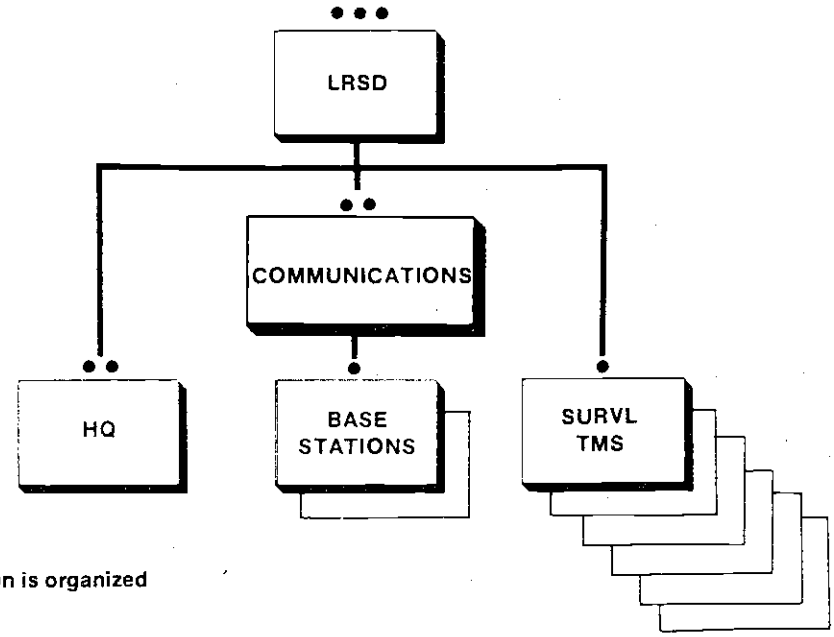

NOTE: The LRSD light division is organized with four surveillance teams.

The headquarters includes the LRSD command and operations center. It directs the functions and activities of the LRSD from the operations center which is located at the division main CP and wired for communications into the division tactical operations center (DTOC) G2 section. The base station communication teams provide high frequency (HF) burst communications between the detachment operations center and deployed surveillance teams, and forward surveillance team reports by secure communications immediately to the DTOC support element (DTOCSE) within the G2. The surveillance teams operate independently obtaining and reporting information about enemy forces, activities, terrain, and weather within their assigned areas of surveillance. For timely receipt of combat information from corps long-range surveillance teams deployed beyond the range of surveillance provided by LRSD teams, the LRSD may be augmented by an additional base station from the corps long-range surveillance company (LRSC). Divisions and corps coordinate long-range surveillance plans to ensure complementary surveillance coverage.

The LRSD is organic to the MI battalion, division. The LRSD conducts long-range surveillance missions for the division to supplement the intelligence collection and surveillance provided by the MI battalion and other IEW sources. Long-range surveillance operations significantly enhance the IEW system in providing current intelligence to tactical commanders as to threat formations within their respective areas of operations and interest (for more detail, see FM 7-93).

QUICKFIX FLIGHT PLATOON

The QUICKFIX flight platoon, with three QUICKFIX systems, provides aerial COMINT, DF, and jamming support to the division. Deployed under the OPCON of the MI battalion, it is employed by the MI battalion as a GS resource to complement ground-based systems capabilities. Close coordination is maintained with the CAB to ensure maintenance support, flight readiness, and pilot training.

In the heavy division CAB, the platoon is assigned to the GS aviation company. With this subordination, constant coordination must be effected between the CAB and the MI battalion to ensure operational readiness of the SIGINT and EW subsystems and the QUICKFIX system as a whole. The platoon operates under the OPCON of the MI battalion with tasking and control coming from the TCAE. The QUICKFIX flight platoon remains organic to the MI battalion of the air assault division located in the headquarters, headquarters and operations company (HHOC).

Under either situation, SIGINT and EW tasking flows from the TCAE to the QUICKFIX flight platoon headquarters which then tasks the individual QUICKFIX systems. However, in-flight tasking from the TCAE to the aircraft may be accomplished when necessary via UHF and FM secure radio. The QUICKFIX system reports collected data directly to the TCAE. Resulting combat information is reported by the TCAE to the IEWSE at brigade for use by fire and maneuver units and to the G2 or DTOCSE at the DTOC.

A detailed description of the QUICKFIX system, its capabilities, and information on all of the SIGINT and EW systems of the division is located in Appendix B (classified) published separately.

MILITARY INTELLIGENCE BATTALION (AIRBORNE/AIR ASSAULT DIVISIONS)

The MI battalion (airborne division) and MI battalion (air assault division) are organized into four companies. The battalions are identical except the MI battalion (airborne) has added Remotely Monitored Battlefield Sensor System (REMBASS) assets. The battalion organization is shown in the following illustration.

MI BATTALION (AIRBORNE/AIR ASSAULT DIVISIONS) ORGANIZATION

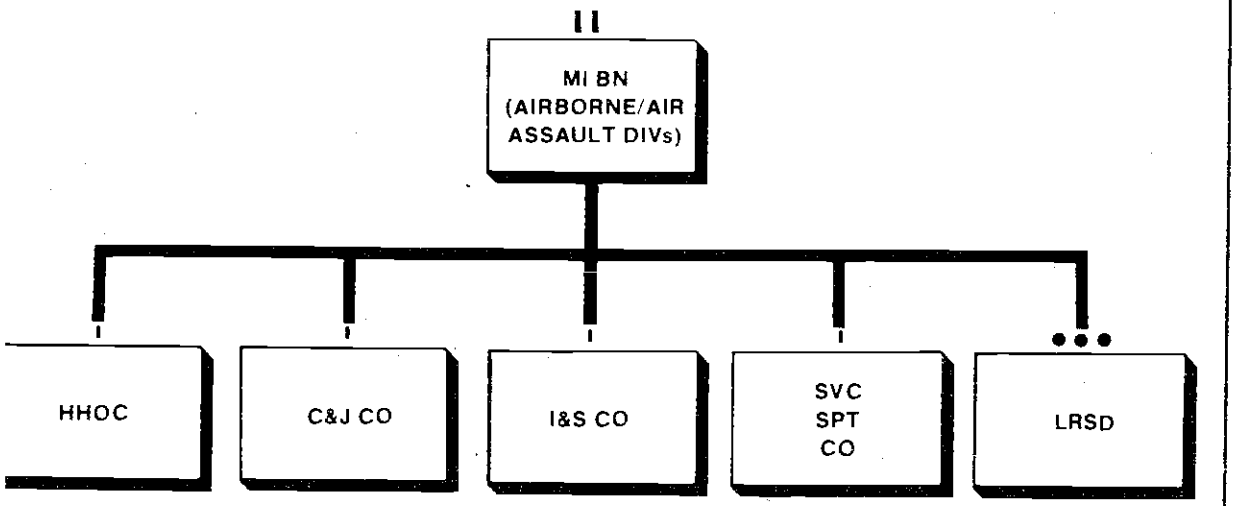

The MI battalion provides support to both division and its subordinate brigades. e MI companies may be task organized o multidisciplined company teams to ovide IEW capabilities to division units a DS or GS basis. The differences ween the MI battalion (heavy) and the battalion (airborne and air assault) are cussed in the following paragraphs. SU detachment operations in the light, borne, and air assault divisions are the ne as described earlier under the heavy ision. Within these divisions, however, r LRS teams are assigned to the detach- nt rather than six as is the case in the SD of the heavy division.

EADQUARTERS, HEADQUARTERS AND OPERATIONS COMPANY (AIRBORNE/AIR ASSAULT DIVISIONS)

The HHOC provides command and con- l for elements of the battalion and sup- ting units. It also provides elements ich manage IEW operations and perform hnical control and analysis for SIGINT/ / operations. It is organized as shown in following illustration.

The company headquarters provides C^2 and administrative support for the company. The battalion headquarters section provides C^2 of battalion assigned and supporting elements, staff planning, management, and coordination of battalion operations including the employment of battalion assets.

The QUICKFIX flight platoon is organic to the MI battalion in the air assault division, rather than to the CAB as in the heavy, airborne, and light divisions. Its personnel, equipment, functions, and operations are identical to those of the QUICKFIX flight platoon in the heavy division.

The imagery analysis section has a two-fold mission:

- ☐ To analyze imagery to identify suitable drop/landing zones for airborne operations.
- ☐ To provide limited imagery analysis support for contingency planning and operations.

Additionally, the imagery analysts can exploit hand-held imagery in support of

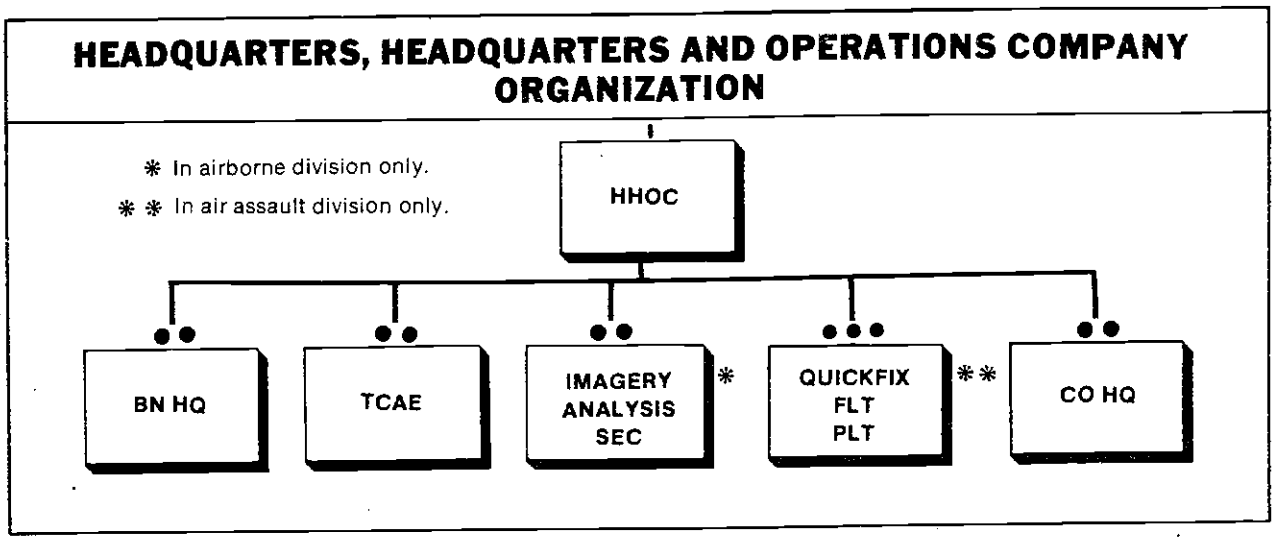

OPSEC and for general intelligence purposes.

COLLECTION AND JAMMING COMPANY (AIRBORNE/AIR ASSAULT DIVISIONS

The C&J company provides SIGINT and ESM collection and ECM support to the division and its subordinate units. The company is organized into three platoons which provide COMINT collection, LOB and ECM support, plus one platoon designed to provide ELINT noncommunications collection and LOB information.

The heavy jammers (AN/GLQ-3B and AN/MLQ-34) are not assigned to the MI battalion of the airborne and air assault divisions due to the weight of these systems and the nature of airborne/air assault deployments. Heavy VHF jamming teams are assigned to the MI battalion tactical exploitation (TE) of the airborne corps to augment airborne and air assault division ECM operations once these units are deployed in the theater of operations.

The C&J companies of the MI battalion airborne/air assault divisions are organized as shown in the following illustration.

Collection and Jamming Platoon

The three C&J platoons differ from those found in the heavy division in that they have only one ECM team and three low-level voice intercept (LLVI) teams per platoon. The LLVI teams are separately resourced and manned from the voice collection team, and they are capable of operating independently and full time.

The LLVI teams may be deployed near the FLOT to support a battalion task force or retained under the IEW company team's control. They provide combat information to the platoon T&A team for forwarding to the TCAE on the C&J tasking and reporting net (FM). Normally, a C&J platoon will directly support each brigade while the noncommunications intercept platoon will be tasked to provide GS to the division. C&J company assets are normally task organized into IEW company teams to satisfy mission requirements and to support their deployment in brigade support packages.

COLLECTION AND JAMMING COMPANY (AIRBORNE/AIR ASSAULT DIVISIONS)

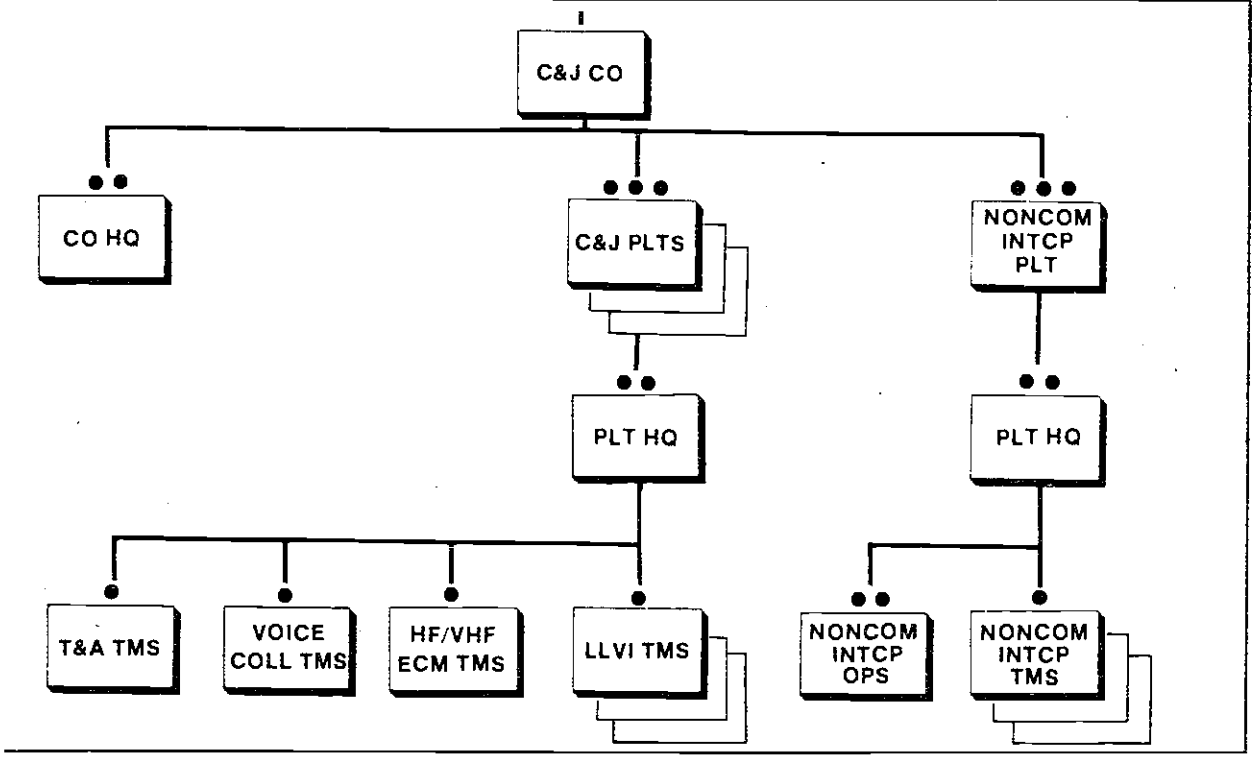

Noncommunications Intercept Platoon

The noncommunications intercept platoon of the C&J company provides collection and LOB information on radars and other noncommunications emitters.

The noncommunications intercept operations section directs the coordinated employment of the three noncommunications intercept teams, receiving tasking and technical data from the TCAE and passing it to the intercept teams. It consolidates LOB data and forwards it to the TCAE. The TCAE analyzes the data to determine emitter locations. The TCAE then reports combat information to the CM&D section at the TOC and forward maneuver brigades through the IEWSE. It also correlates the data with information from other sources, particularly COMINT.

Each of three noncommunications intercept teams is equipped with a TEAMPACK system, capable of collecting intercept and LOB data against enemy radars. This system must be located well forward, near the FLOT, to overcome ground-based LOS restrictions. The three teams may operate independently throughout the division AO, subordinated individually to C&J platoons, or be concentrated in a particular high-threat area according to mission requirements.

INTELLIGENCE AND SURVEILLANCE COMPANY (AIRBORNE/AIR ASSAULT DIVISIONS)

The I&S company provides the division's ground surveillance, interrogation, and CI support. The airborne division's I&S company also contains REMBASS assets. The I&S company is organized as shown in the following illustration.

The company headquarters is responsible for providing C^2 and administrative support for the unit.

INTELLIGENCE AND SURVEILLANCE COMPANY ORGANIZATION

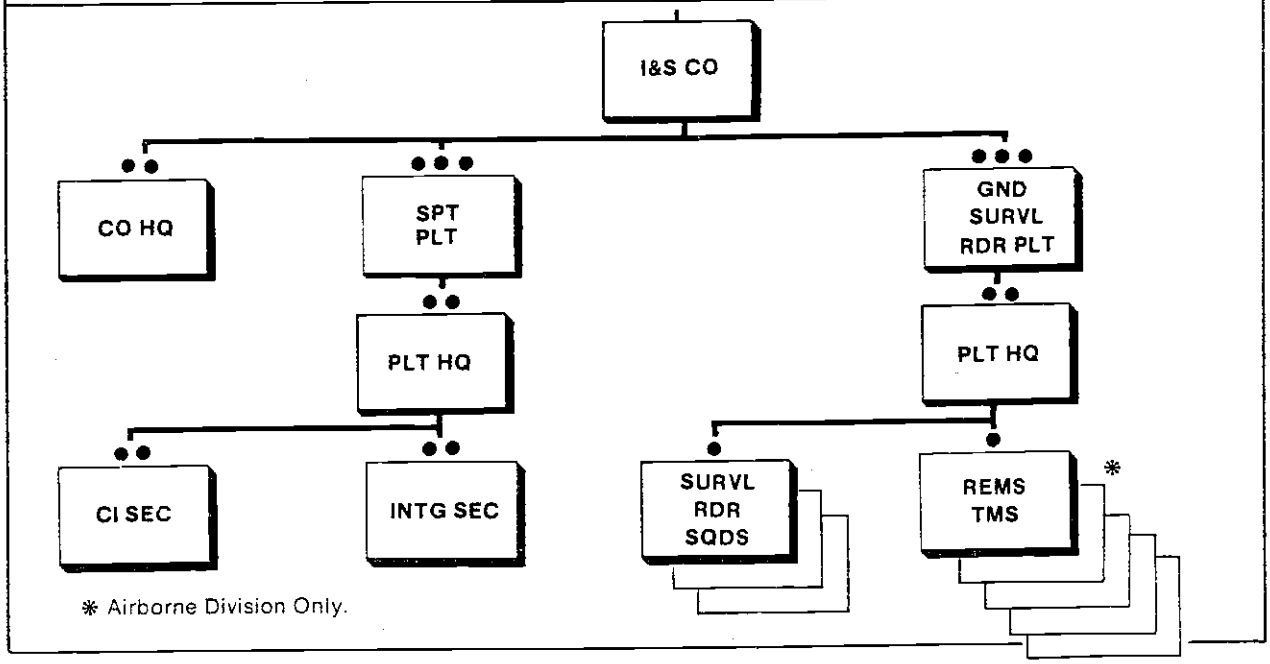

Support Platoon

The support platoon provides CI and interrogation support to the division and its subordinate brigades. CI teams normally deploy as five separate CI teams which support major subordinate commands (MSCs) within the division by countering hostile intelligence collection, sabotage, subversion, and terrorist threats. They provide GS to the division and DS, on a limited basis, to the brigades. GS and designated DS teams support units that are deployed in the division rear, especially DISCOM, in the division's rear operations mission. The interrogation section normally deploys to the division EPW collection point. The MI battalion TOC tasks the IPW section based on collection missions assigned by the CM&D section. The IPW section reports collected information directly to the G2 and CM&D section using normal division communication systems such as the multichannel communications system and general purpose RATT. Elements of the interrogation section may be employed in DS of division subordinate units. When employed in DS of the brigade, the S2 tasks and receives reports from the team through operations and intelligence communications channels internal to the brigade.

Ground Surveillance Radar Platoon

The GSR platoon is organized into three GSR squads. They differ from the GSR squads of the heavy division in that each has one AN/PPS-5 and three AN/PPS-15 GSR teams.

REMBASS

The REMBASS assets, presently found only in the MI battalion of the airborne division, provide additional ground surveillance capabilities. The GSR platoon includes five 3-man remotely employed sensors (REMS) teams who hand emplace and remotely monitor the sensors when activated. These teams may be employed with GSR assets, independently under the control of an IEW company team, or attached to brigades and BTFs. Remotely monitored sensors can be used for surveillance of general or specific areas, along unit flanks to enhance security, and in a rear area surveillance role. The REMBASS is comprised of three components:

- Sensors (magnetic, seismic, acoustic, and infrared).
- Radio repeaters.
- Sensor monitoring equipment.

Unattended ground sensors, with interpretation by sensor personnel, are capable of providing target classification (personnel, wheeled, tracked vehicles), location, number, direction and rate of movement, length of column, and time of sensor activation.

SERVICE SUPPORT COMPANY (AIRBORNE/AIR ASSAULT DIVISIONS)

The service support company provides maintenance, food service, and communications support to the battalion. The company is organized as shown in the following illustration.

Company Headquarters

The company headquarters provides C^2 for the company and its assigned and attached assets. It also has a food service section which operates the battalion dining facility.

Communications Platoon

The communications platoon operates a telecommunications facility at the MI battalion TOC and provides a RATT section which terminates communications to the MI battalion's operational platoons. The radio retransmission section operates three FM voice retransmission stations for battalion internal communication nets to extend range when necessary.

Communications-Electronics Maintenance Platoon

The C-E maintenance platoon consists of the C-E maintenance section and the EW or intercept equipment repair section. It provides unit maintenance support for most battalion C-E and EW intercept systems and intermediate DS maintenance on SIGINT and EW systems.

Mechanical Maintenance Platoon

The mechanical maintenance platoon consists of the platoon headquarters and a mechanical maintenance section. The platoon headquarters has a decontamination

SERVICE SUPPORT COMPANY ORGANIZATION

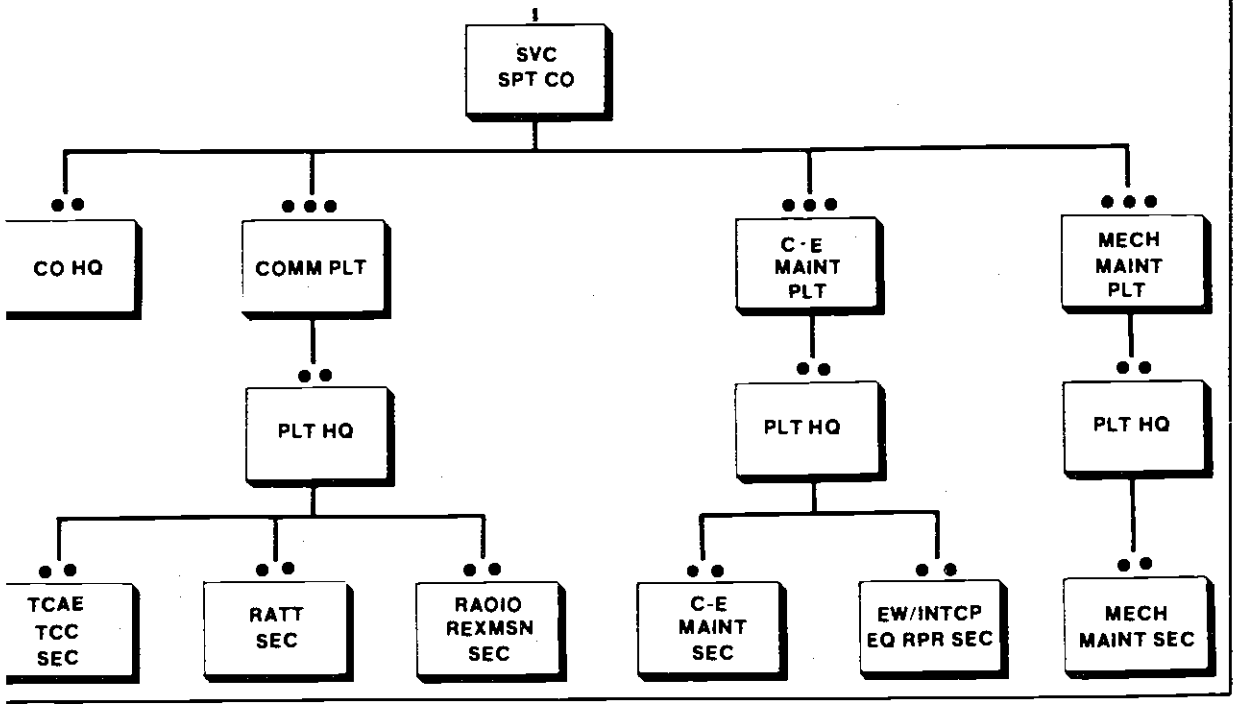

specialist and decontamination equipment for battalion use. The mechanical maintenance section performs required unit maintenance on organic vehicles, generators, and air conditioners.

MILITARY INTELLIGENCE BATTALION (LIGHT DIVISION)

The MI battalion supporting the light division is organized with the same philosophy as its parent division. It is light, easy to transport, and relies on additional assets from higher echelons for support during combat operations. The MI battalion, light division, relies on augmentation from corps for ground-based jamming and ELINT support. When the division is employed in a low intensity conflict (LIC) environment, additional CI and IPW augmentation from corps and EAC is required. The battalion is organized into three companies. Company assets may be task organized into multidisciplined company teams to support divisional unit or specific missions. The MI battalion, light division, is organized as shown in the following illustration.

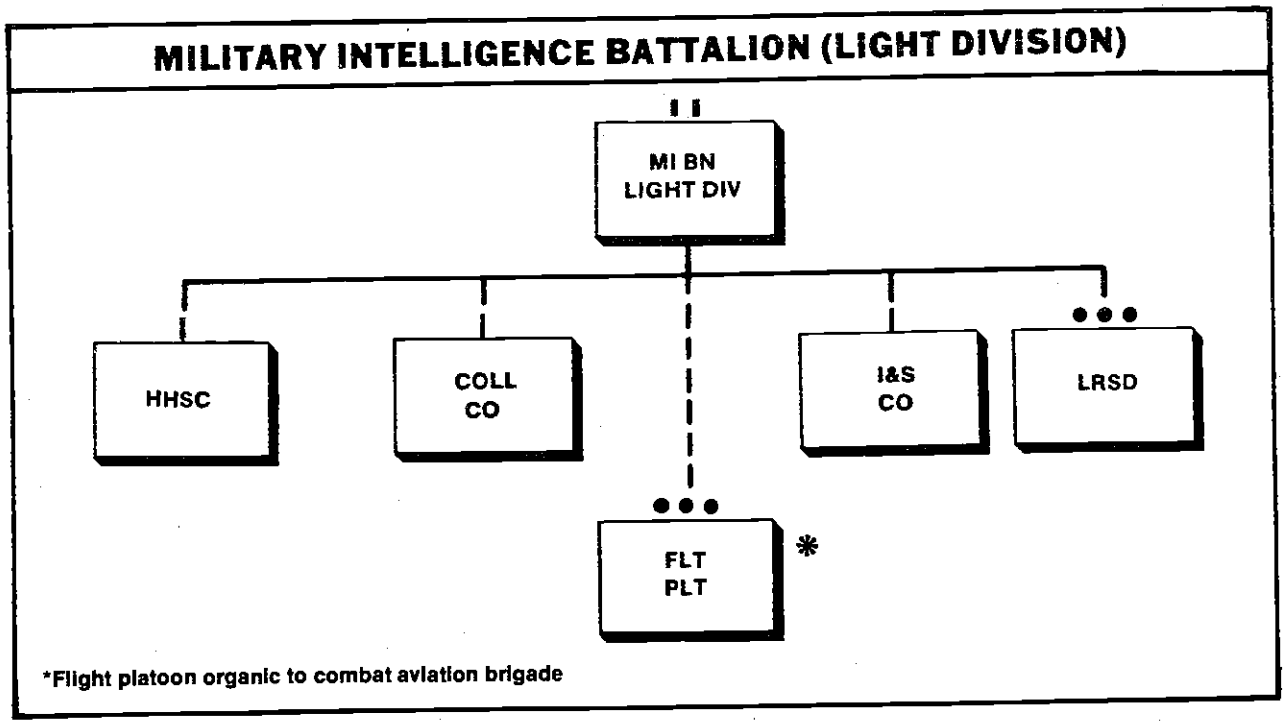

160-850 O - 94 - 2

HEADQUARTERS, HEADQUARTERS AND SERVICE COMPANY (LIGHT DIVISION)

The HHSC provides C^2 for elements of the battalion and supporting units. It contains the elements which provide asset management for IEW operations and performs technical analysis for SIGINT and EW activities. The HHSC is organized as shown in the following illustration.

The battalion command staff elements are all contained in the battalion headquarters section. The company headquarters section provides C^2 for the elements assigned and attached to the company.

The battlefield deception cell deploys elements to the DTOC, assisting the G3 in planning multidisciplined deception activities.

HEADQUARTERS, HEADQUARTERS AND SERVICE COMPANY ORGANIZATION

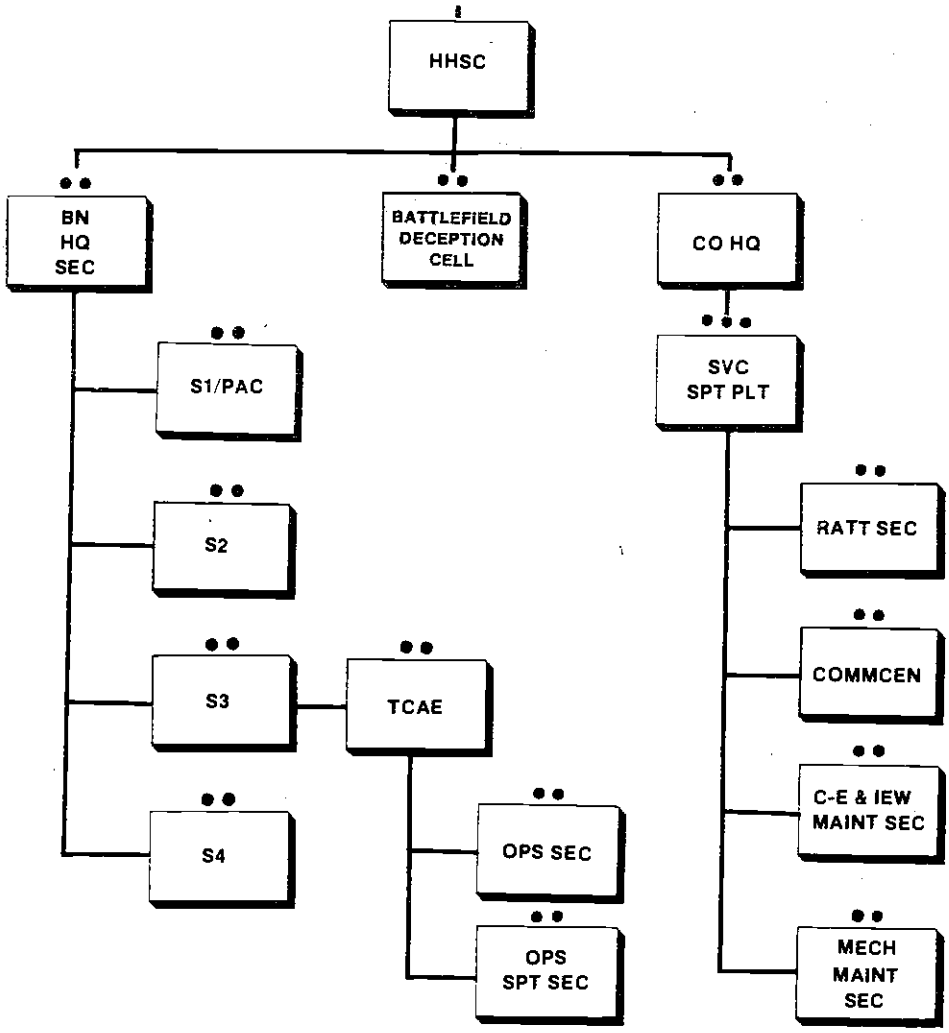

The TCAE, while reduced in strength from that found in the heavy division, provides for the same control and analysis of SIGINT and EW operations. The operations section is concerned primarily with control and reporting, while the operations support section provides analysis and technical data base maintenance.

The service support platoon provides both communications and maintenance support to the battalion's elements. The RATT and communications center sections provide record copies of message traffic for internal nets as well as a terminal for multichannel communications linking the MI battalion with the division's CPs and other divisional units. The C-E and IEW maintenance section provides maintenance support for electronic equipment found in the battalion. The mechanical maintenance section is organized to provide maintenance on battalion vehicles and generators. Elements of this platoon are included in company teams as the battalion task organizes.

COLLECTION COMPANY (LIGHT DIVISION)

The collection company contains the SIGINT and EW collection assets of the MI battalion. The company provides voice collection, LOB information, and limited analysis. It is organized into three voice collection platoons and a communications section (see the following illustration).

COLLECTION COMPANY (LIGHT DIVISION) ORGANIZATION

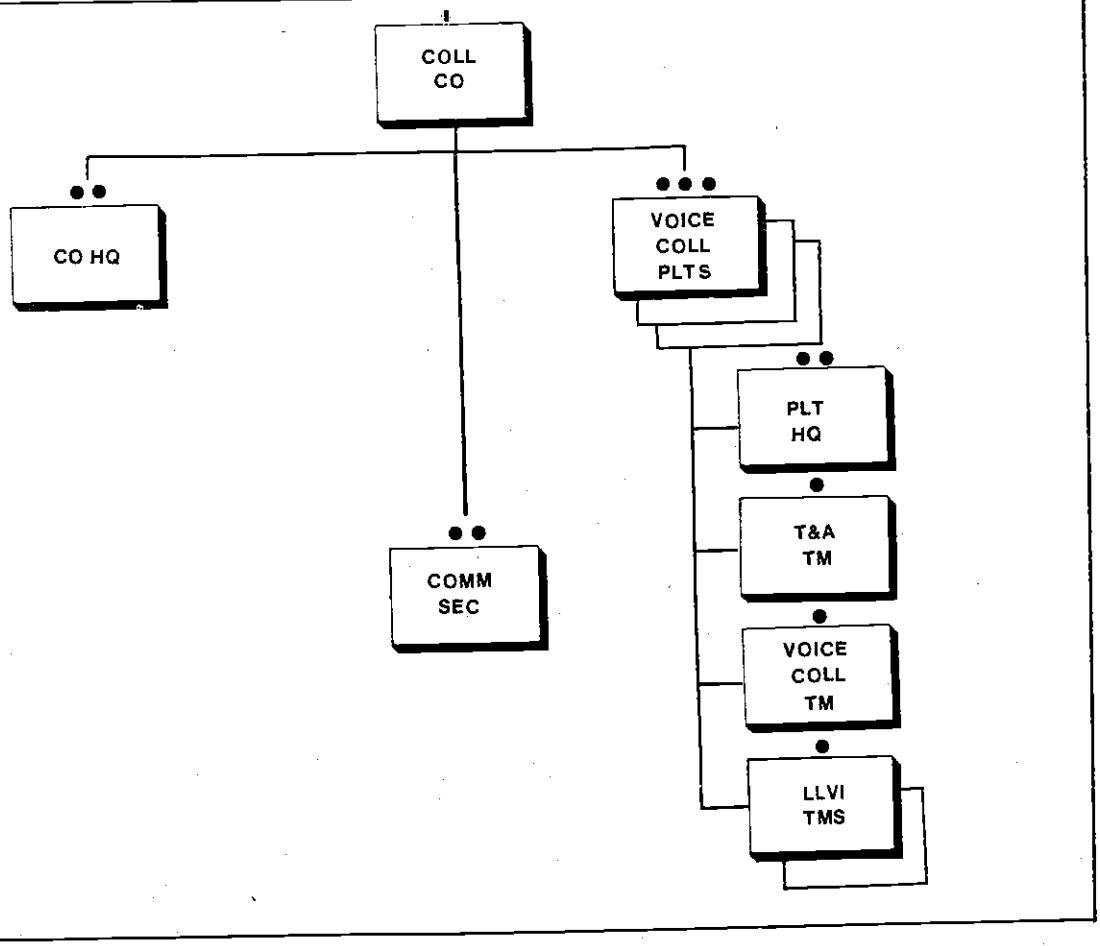

Company Headquarters

The company headquarters exercises C^2 over all personnel and equipment assigned or attached to the unit.

Communications Section

This section provides communications support to the company. It has both RATT and FM voice retransmission capabilities in the communications section. These assets link the voice collection platoons to the TCAE.

Voice Collection Platoon

The three voice collection platoons are similar to the C&J platoons discussed in the airborne/air assault divisions, except that they have no ECM team. Their voice collection and LLVI teams operate as described earlier, tasked by the T&A team based on COMINT tasking from the TCAE.

INTELLIGENCE AND SURVEILLANCE COMPANY (LIGHT DIVISION)

The I&S company contains the MI battalion's CI, IPW, and ground surveillance assets. It is organized as shown in the following illustration.

The company headquarters provides C^2 and administrative support for the unit.

I&S COMPANY ORGANIZATION (LIGHT DIVISION)

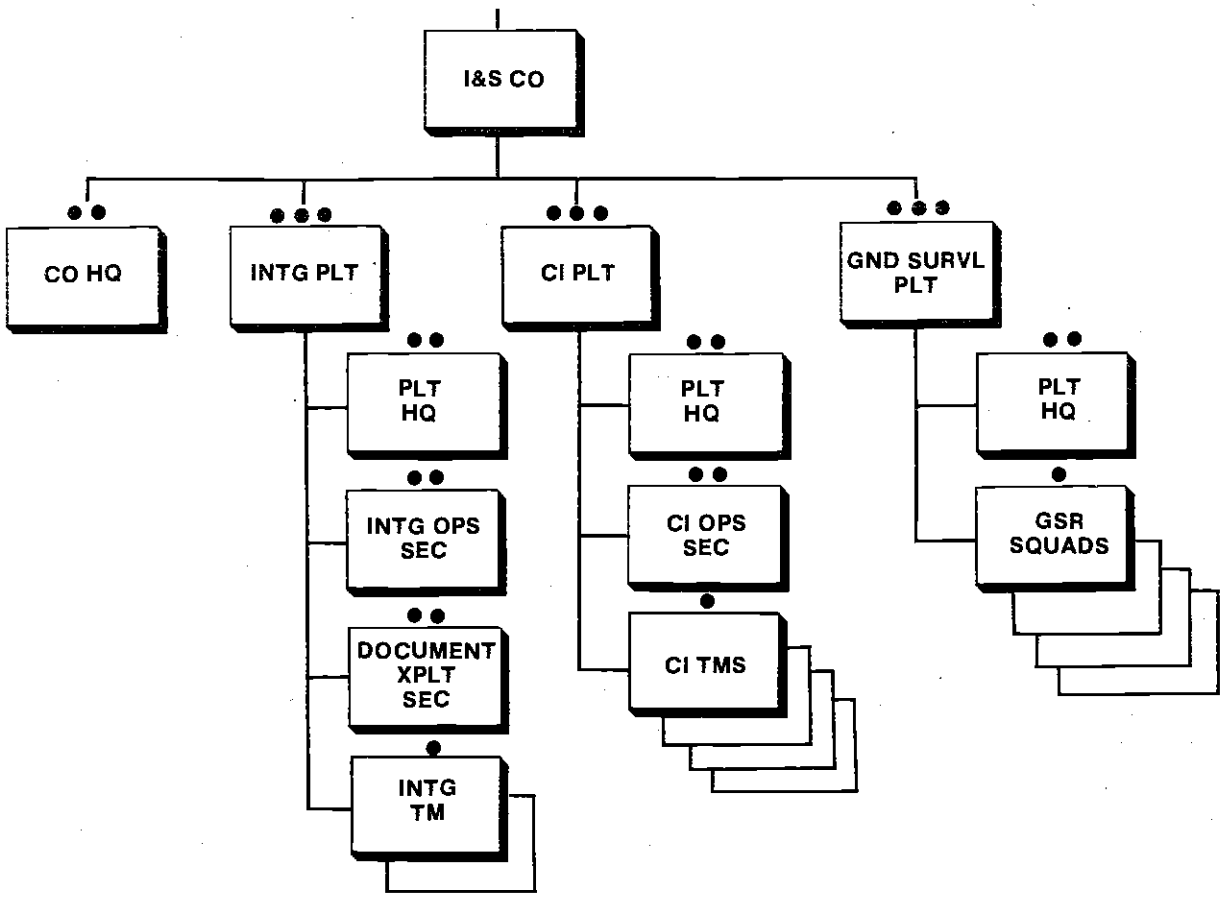

Interrogation Platoon

The interrogation platoon is organized to provide IPW and document exploitation support to the division and its subordinate units. The interrogation operations section is responsible for screening and interrogation of EPW and detainees at the division's central collection point. They function in GS of the division. The two interrogation teams can be used at the division's forward collection points or to augment the interrogation operations section. When used at the forward collection points, they are employed in DS of the brigades. When in a DS role, the brigade S2 tasks and receives reports from the team through the brigade internal operations and intelligence reporting network. The document exploitation section is tasked to review enemy documents and provide reports and translations required to support current intelligence operations.

Counterintelligence Platoon

The CI platoon provides CI support to the division and subordinate unit. The CI operations section assists the platoon leader in managing the platoon's CI teams. Additionally, its personnel augment the CI teams when necessary. The four CI teams provide support by countering hostile intelligence collection, sabotage, subversion, and terrorist threat.

Ground Surveillance Platoon

The GSR platoon differs from other GSR platoons in that it is organized into four GSR squads with three AN/PPS-15 GSR systems each.

ECHELONS ABOVE DIVISION MILITARY INTELLIGENCE SUPPORT

The MI battalion organic to a division requires support from corps and EAC MI assets. Primary support received from corps is in the areas of CI, IPW, and SIGINT and EW. EAC provides communications security (COMSEC) support for all subordinate organizations.

The added MI support is designed to cover gaps in coverage and to extend the division commander's ability to see deeper into the enemy's rear area. Division MI assets generally cover the division's AO and portions of the divisions area of interest. The division is largely dependent on the corps and higher echelons for intelligence concerning threats within distant portions of the division's area of interest.

The MI brigade at corps provides both DS and GS IEW capabilities to the division. Short-range assets (ground-based SIGINT systems and jammers) must be moved into the division's forward area in order to be effective. These assets are allocated by corps to forward deployed divisions and the armored cavalry regiment (ACR) to weight the intelligence or jamming effort. Corps CI and interrogation teams can be sent to augment the forward divisions, and LRSC operations may be conducted within or beyond the divisions' area of interest under division or corps control. Such augmentation depends on the missions assigned to the corps and the divisions and the priority given to interrogation, CI, and LRSC operations at each of these echelons. The longer-ranged airborne collection systems provide coverage from the corps area spread across the entire corps front. The GUARDRAIL and QUICKLOOK SIGINT and EW systems are good examples of this type of support.

Corps is also the main interface between the national intelligence system and tactical operations. It is a two-way communication path as tactical information is fed to support the national intelligence effort, and national-level systems provide data needed by the corps and division.

EAC SIGSEC and HF SIGINT and EW assets support theater, corps, and division operations since these organizations have no SIGSEC or HF DF and HF ECM assets. The theater TCAE (formerly called primary control and analysis center (PCAC)) for SIGINT and EW operations is also found at EAC in the MI brigade (EAC). The PCAC functions in a manner similar to the TCAEs of the corps and divisions by providing technical control and management of MI brigade (EAC) SIGINT resources and interfacing with national systems for analysis of technical SIGINT data received from such systems.

CHAPTER 3

Command and Control

The division commander places demands
ı the IEW system and uses the products of
ıe system to plan and direct all phases of
ıe air-land battle. His staff employs the
:W system and ensures that it is inte-
:ated with division combined arms
)erations.

The MI battalion commander and his
aff organize and task the MI battalion
ements discussed in Chapter 2 based upon
ission requirements provided by the G2
ıd G3. This includes initial task organiza-
on with assignment of standard tactical
issions (DS, GS, reinforcing, or GS rein-
rcing as described later in this chapter),
ıgoing management of specific missions
ırough provision of technical data, and the
:ocess of redirecting and moving assets on
ıe changing battlefield.

This chapter will describe the principles
ıat guide the MI commander and staff in
'ganizing to meet IEW mission require-
ents. It describes command and support
lationships and offers methods of task
'ganizing an MI unit. It also describes the
)mmunications that are vital in organiz-
g the MI unit for combat and ensuring the
nely flow of information and intelligence
hich affects the outcome of the air-land
ıttle.

PLANNING AND MANAGEMENT

The division initiates IEW planning
ıen it receives a mission from the corps or
sumes a mission on its own initiative.

IEW requirements for these missions are forecast and updated during the mission. The status and capabilities of divisional IEW resources must be closely monitored to ensure effective use of these resources.

MANAGEMENT

The management and command and control of the IEW system are closely interrelated. The responsibilities of management are split between the various command and control facilities described in this chapter (for more detail, see FC 101-55). The three levels of management are—

- Requirements management, which is the translation of the division commander's guidance and concept of the operation into intelligence, EW, and CI requirements.
- Mission management, which is the specific planning, direction, and control of operations required to satisfy the commander's needs for intelligence, EW, and CI.
- Asset management, which is the planning, direction, and control of individual collection, EW, and CI resources necessary to accomplish the IEW mission.

Requirements and mission management are conducted by the G2 and G3 staff, augmented by the DTOCSE. The headquarters of each divisional unit manages the IEW mission asset that the unit is capable of performing. The MI battalion S3 within the MI battalion TOC manages MI battalion element assets for the commander. These levels of management are described in detail in Chapter 4.

SUPPORT

The IEW missions described in Chapter 1 and the IEW functions, capabilities, and limitations described in Chapter 2 and Appendix B provide the basis for the principles of IEW support to both offensive and defensive combat operations. These IEW principles are directly keyed to division and brigade requirements. The principles of IEW support are—

- ☐ Knowing the battlefield—multidisciplined reconnaissance, surveillance and target acquisition (RSTA) assets to provide essential information about the enemy, terrain, and weather.
- ☐ Denying the enemy intelligence—EW and COMSEC resources to protect C^3 and CI resources to counter the enemy's multidisciplined intelligence collection efforts.
- ☐ Disrupting and destroying enemy C^3I facilities—communications jamming (COMJAM) resources to disrupt HPT C^3 facilities and ESM resources to target fire support systems.
- ☐ Maintaining the integrity of IEW operations—task organizing to satisfy aggregate mission requirements and the full integration of IEW to maintain the integrity of the force as a whole.

DIVISION C^2 ORGANIZATIONS AND FACILITIES

The division's CPs consist of the facilities from which the commander and his staff plan and direct battles on the air-land battlefield. The division commander commands his forces from the most advantageous place on the battlefield. He is not fixed to any of the division CPs in the execution of his command responsibilities. CPs exist to support the commander in performing the following critical functions:

- ☐ Command the force.
- ☐ Know the situation.
- ☐ Make decisions.
- ☐ Assign missions.
- ☐ Allocate means.
- ☐ Direct forces.
- ☐ Sustain the force.
- ☐ Motivate subordinates.
- ☐ See the battlefield.
- ☐ Win the battle.

The commander personally controls the battles in which the division is engaged. As the commander, he must clearly establish and communicate his intent to coordinate forces and synchronize combat power through concentration in time and space at decisive points on the battlefield. Thus, the tenets of air-land battle doctrine: initiative, agility, synchronization, and depth are exercised through the precise execution of command at all levels. Division CPs support the commander in the exercise of his command requirements. The division staff—

- ☐ Obtains and provides information.
- ☐ Estimates and anticipates the situation.
- ☐ Supervises execution.
- ☐ Recommends courses of action.
- ☐ Prepares plans and orders.
- ☐ Coordinates operations.

CPs accomplish three principal tasks to support the division's overall C^2 system. These tasks include—

- ☐ Planning the battle.
- ☐ Conducting the battle.
- ☐ Sustaining the battle.

The amount of effort dedicated to each of these functions varies by echelon and within each of the division's CPs.

DIVISION COMMAND POSTS

The imperatives each division CP must meet to achieve their purpose are shown in the following illustration.

If the CP does not survive, it fails to accomplish its assigned tasks. CP operations must be continuous 24 hours a day, with a qualified and integrated staff to accomplish their operational functions.

COMMAND POST IMPERATIVES

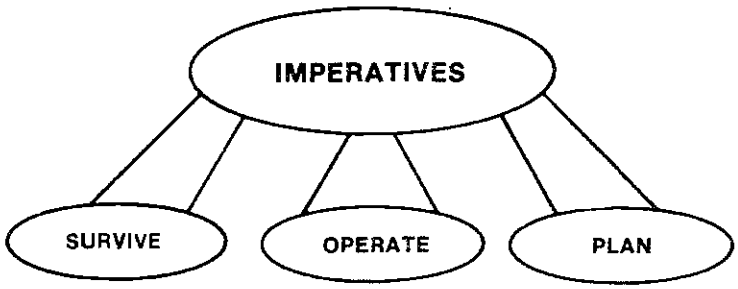

- •MOBILITY
- •AUSTERITY
- •DISPERSION
- •REDUNDANCY
- •MINIMUM SIGNATURE

- •PROCESS INFORMATION
- •COMMUNICATE
- •ISSUE ORDERS
- •SUPERVISE
- •INTEGRATE

- •THINK AHEAD
- •GET INSIDE ENEMY DECISION CYCLE

ch CP staff must plan for future operations by assimilating current information d developing estimates and plans for the nduct and support of these operations. fective C^2 can be exercised only when erational planning and execution support e rapid, changing battle. This allows the endly commander to act and the enemy ce to react. Effective CP operations allow e commander to choose the time and ace to fight and synchronize the use of all ans of combat power to decisively win e battle.

There are three major CPs used at the vision level: the division's main CP, tactical CP, and rear CP.

Main CP

The primary functions of the main CP are —

Synchronize the battle.

Conduct deep operations.

Plan future battles.

The secondary function of the main CP is coordinate combat service support (CSS). e main CP staff monitors the close and r operations to synchronize the division's deep, close, and rear operations and recommend reallocation of combat power within the division's AO. The DTOC is the operational hub of the main CP and is normally supervised by the division's chief of staff. At the DTOC, the division's in-depth planning for and conduct of IEW operations take place, requirements and mission management of IEW activities are performed, and IEW elements throughout the division are tasked.

The main CP staff includes—

- ☐ Staff resources of the G2.
- ☐ DTOCSE.
- ☐ G3.
- ☐ FSE.
- ☐ Division chemical section.
- ☐ Tactical air control party (TACP).
- ☐ C-E staff element.
- ☐ Other special staff sections.

The G2, as the intelligence manager, provides perishable combat information and intelligence to support the planned use of fire, maneuver, EW, and other operations to be executed by the division. The DTOCSE and all other principal and special staff

elements support the G2 in receiving combat information dealing with enemy, weather, terrain, and intelligence derived from all other sources.

The DTOC maintains communications with the—

- ☐ Tactical CP.
- ☐ Rear CP.
- ☐ Subordinate CPs within the division.
- ☐ Corps TOC and corps tactical CPs.
- ☐ Adjacent unit CPs.

The Tactical CP

The primary function of the tactical CP is to conduct the division's close operations. Its secondary function is to monitor the division's deep and rear operations for their impact on FLOT operations and to plan future close operations. The tactical CP operates continuously and is of small physical size and electronic signature. It is positioned forward on the battlefield and has great mobility.

The tactical CP staff elements include representatives from the—

- ☐ G2.
- ☐ G3.
- ☐ FSE.
- ☐ TACP.
- ☐ ADA.
- ☐ Engineer.
- ☐ CSS/units.

As the orientation of the tactical CP is forward in the MBA with a principal focus on the division's close operations, the tactical CP is a principal user of intelligence produced by the G2 section at the DTOC and combat information reported by friendly units in contact. Planning, accomplished within the tactical CP, is narrower in scope than that accomplished at the main CP. It has a shorter time line towards its execution—normally only 24 hours. All staff elements located at the tactical CP contribute to the intelligence process through the input of combat information received from their parent unit, in the case of special staff officers such as the ADA, engineer, and FSE (DIVARTY), or through operations and intelligence reports received at the tactical CP from divisional units at large. So that detailed intelligence collection operations can be focused on the follow-on enemy forces, combat information received and analyzed by the tactical CP G2 assists the division main CP G2 staff determine the identification, disposition, and strength of enemy units in contact. Operation of the tactical CP is normally the responsibility of either the assistant division commander or the G3.

The Rear CP

The primary functions of the rear CP are to sustain the battle and the conduct of division rear operations. Its secondary functions include serving as the back-up or alternate CP for the main CP and planning future rear operations. Rear operations planning includes IPB of the division rear area, terrain management in the division rear area, traffic control, battle management of the rear area, and overall C^2 for administrative and logistic support that takes place in the rear. The rear CP consists of the RAOC and support personnel from the division's coordinating and special staff. Support personnel are—

- ☐ Personnel who have expertise in general intelligence and CI operational areas.
- ☐ G1, G3, G4, and adjutant general personnel.
- ☐ Administrative/logistics operators.

The assistant commander or the DISCOM commander is responsibile for operation of the rear CP. The RAOC includes an operations staff representing the maneuver (operations), intelligence, chemical, and fire support functional areas and designated rear area combat operations and area damage control officers. IEW support to the division's rear operations is planned concurrently with intelligence operations supporting the division's deep and close operations. IPB of the rear area focuses on the types and degrees of IEW support dedicated to rear operations. CI

)perations designed to provide I&W infor-
nation and security to division rear ele-
nents will be planned in detail. The posi-
ioning of the division's EPW interrogation
collection point will also be integrated into
he rear operations plan for security as well
is intelligence exploitation purposes. Other
EW support to include GSR, COMINT, and
ECM will be integrated into the rear opera-
ions plan as dedicated support, or on-call
n the event of contingencies, based on mis-
ion, enemy, terrain, time and troops avail-
ible (METT-T) and detailed intelligence
)lanning.

DIVISION STAFF

The G2, G3, FSCOORD, and the C-E fficer coordinate and direct division IEW perations. They obtain the information equired to answer the commander's equirements concerning both enemy forces nd friendly vulnerabilities. They integrate CM with maneuver and fire and plan and oordinate OPSEC measures and defensive W measures to protect the division from nemy intelligence collection operations.

G2

The G2, the senior intelligence officer in ie division, is the division commander's rincipal advisor concerning the enemy, errain, and weather. He directs and coor-inates division intelligence, CI, and secu-ity operations.

The G2—

- Recommends intelligence requirements.
- Directs intelligence collection and all-source analysis for the production of intelligence.
- Ensures the timely dissemination of intelligence and combat information.
- Plans, directs, and supervises CI operations throughout the division area to counter enemy multidisciplined intelligence collection, espionage, subversion, and sabotage.
- Directs support to OPSEC.
- Provides the ESM and intelligence necessary to plan and execute EW operations.
- Establishes and enforces division policy for personnel and document security.
- Supervises the division special security officer (SSO).
- Ensures that division policies and procedures are compatible with those established by the Departments of Army (DA) and Defense (DOD).
- Provides staff supervision for branches within the G2 and those sections of the DTOCSE that support G2 intelligence and CI responsibilities.
- Recommends and satisfies the commander's PIR and IR.
- Plans and manages the command's multidiscipline intelligence collection (IMINT, HUMINT, and SIGINT) and processing resources. This includes identifying requirements for RSTA assets available within and in support of the division.
- Coordinates with the G3 and assigns IEW missions to units of the division.
- Recommends and satisfies the division's CI requirements.
- Performs situation and target development; for example, recommends targets in support of the division maneuver, fire support, and EW systems.
- Provides predictions of fallout from enemy employed nuclear and chemical weapons

FM 101-5 and FM 34-1 provide additional information concerning the responsibilities and functions of the division G2.

There is no standard organization for the G2 section. The specific organization is dictated by the division mission, nature of the threat and AO, resources, and the desires of the division commander, chief of staff, or G2. Like all other principal division staff elements, the G2 provides manning at all division operational facilities to include the tactical, main, and rear CPs. A type of organization for the division's intelligence staff is shown in the following illustration.

DIVISION INTELLIGENCE STAFF ORGANIZATION

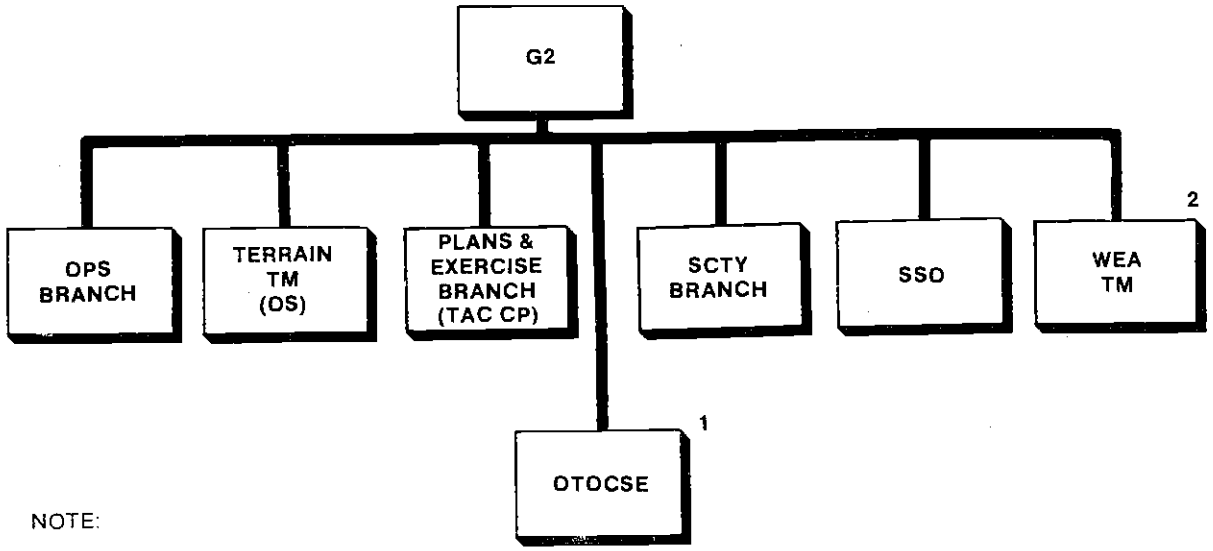

NOTE:

1. DTOC SUPPORT ELEMENT PERSONNEL PERFORM DUTY IN G2 AND G3 STAFF BRANCHES.

2. SPECIAL STAFF ELEMENT UNDER STAFF SUPERVISION OF THE ACofS, G2.

The G2 operations branch, based on G2 guidance, directs and coordinates intelligence, CI, division SSO, staff weather team, and the engineer terrain team operations. It coordinates the daily operations of the G2 staff within the DTOC, providing intelligence to the division commander, the coordinating staff, and the special staff. It ensures that intelligence requirements to support current operations are satisfied, to include the dissemination of intelligence and combat information. It coordinates closely with the G3 operations branch and FSE to ensure that intelligence and CI operations are integrated with and support the commander's scheme of maneuver and the fire support targeting effort.

The tactical surveillance officer (TSO), a member of the G2 staff, monitors the current and planned deployment of reconnaissance and surveillance (R&S) assets assigned and attached to the division and divisional units. In coordination with the CM&D section, the TSO maintains the current status of R&S resource availability and plans for their employment to support future operations. The TSO, trained in collection management and R&S operations, serves as the principal G2 interface between the CM&D section who executes R&S planning, requesting, and tasking and the plans section of the G3, the air liaison officer and division aviation, and fire support and target acquisition experts in the FSE.

The G2 plans and exercise branch formulates and coordinates intelligence and CI plans and requirements for future and contingency operations by close coordination with intelligence personnel assigned to the G3 plans branch. The G2 directs the DTOCSE to ensure that IPB and TVA support is provided.

The security branch develops division security policies and assesses the security status of the command. It coordinates with the DTOCSE CI analysis section for security assistance.

The G2 DTOC and tactical and rear CP elements may be staffed as separate branches or the necessary resources may be drawn from other G2 branches. The G2 element at the tactical CP provides the division commander and staff with the intelligence support required to conduct close operations. The element must be small and

capable of continuous operations. The G2 tactical CP element coordinates closely with the G2 operations branch and DTOCSE at the division main CP to ensure that it is aware of the division's current deep and rear operations as well as intelligence plans for future operations.

The division SSO is a G2 asset assigned to the division headquarters, headquarters company (HHC). The SSO section will consist of the SSO, one enlisted clerk, and may be augmented as required. The division SSO—

- ☐ Ensures that SCI operations within the division conform to national-level directives and regulations.
- ☐ Supervises the establishment of sensitive compartmented information facilities (SCIFs) in tactical field environments.
- ☐ Provides guidance to the G2 regarding the commander's SCI requirements balanced against the parameters and constraints levied by national-level agencies.
- ☐ In-place communications architecture that supports the electrical, voice, radio, and facsimile transmission of SCI material within the division AO.

DTOCSE

The division HHC has organic to it, a DTOCSE which is designed to reinforce the G2 and G3 in the management of IEW operations. The sections of the DTOCSE are functionally integrated with the G2 and G3 sections. They may also be integrated physically. The individual sections work as extensions of and act in the name of the G2, G3, or commander. The DTOCSE is organized as shown in the following chart.

CM&D Section. The CM&D section, under the staff supervision of the G2, performs mission management for intelligence collection and is the focal point for the rapid dissemination of combat information and intelligence. Mission management includes collection planning, tasking, and coordination. Collection planning converts PIR and IR into collection missions. Requirements include those developed by the commander, G2 and G3, division subordinate units, and higher and adjacent commands. Requirements are also generated from the identification of gaps in the division intelligence data base as identified by the ASPS of the DTOCSE. The CM&D section receives, analyzes, consolidates, and assigns priorities to IEW requirements and ensures that combat information and intelligence are

DTOCSE ORGANIZATION

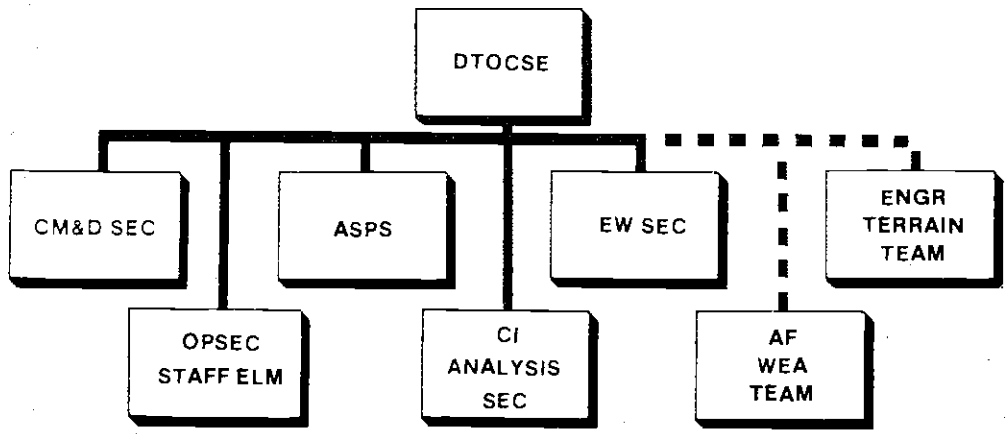

He must be familiar with the—

- ☐ Routine garrison duties that are common to SSOs at all echelons of command.
- ☐ SIGINT organization of his division and how SIGINT tactical operations and procedures impact on the administration of SCI.

disseminated to the right user at the right time.

ASPS Section. The ASPS, under the staff supervision of the G2, provides intelligence analysis and production support to the division. It is staffed to provide continuous, all-source analysis support. It is located within a SCIF in the DTOC. It is a terminus for SCI communications links which it uses for analyst-to-analyst communications with other analytical elements within the division, corps, and adjacent units. These SCI communication links provide the ASPS access to national intelligence products and support. The ASPS, supported by the terrain and Air Force weather teams, performs IPB. The ASPS uses the IPB data base for situation and target development. The following illustration is a list of the support provided by the ASPS.

screens and segregates combat information and intelligence received by the DTOC for its application to targeting requirements. The FAIO also coordinates cuing of MI collection systems from information developed by artillery target acquisition systems.

The ASPS interfaces with other analytical elements to exchange information and intelligence, to reconcile processing efforts and to resolve discrepancies. Close and continuous interface between intelligence producers is vital to the intelligence production effort.

INTELLIGENCE ANALYSIS AND PRODUCTION SUPPORT PROVIDED BY THE ASPS

Processes information from all sources—organic and external—to produce intelligence in response to the division commander's needs.

Develops and maintains the intelligence data base to include EOB information.

Identifies gaps in the data base and refers them to the CM&D section for inclusion in the collection plan.

Provides IPB products to the division commander and staff, subordinate units, and other elements that require them to plan, execute, and support combat operations.

Identifies enemy HVTs and, in coordination with the FSE and G3, recommends HPTs to the commander.

Through target development, the ASPS plays a key role in the division targeting effort. Through IPB and TVA, it identifies enemy HVT. It also supports targeting through target correlation.

The field artillery intelligence officer (FAIO), assigned to the FSE, operates within the ASPS in the DTOC. The FAIO helps identify targeting and target development requirements, evaluates incoming reports to identify pertinent targeting data, and once the target has been developed sufficiently by the ASPS, expedites its reporting to the FSE. He informs the DTOCSE of current targeting requirements. The FAIO

EW Section. The EW section assists the G3 in carrying out his EW staff responsibilities. It provides mission management for EW operations and recommends the allocation of EW resources. It assists the G3 in integrating EW with combat operations and identifying EW requirements. It converts EW requirements to specific ECM missions and tasks the MI battalion S3 through the CM&D section. The illustration on page 3-8 is a list of the support provided by the EW section.

ELECTRONIC WARFARE SUPPORT PROVIDED BY THE EW SECTION

Monitors the enemy electronic order of battle (EEOB) technical data base which is maintained by the TCAE.

Evaluates the vulnerability of enemy emitters.

Recommends enemy targets for ECM to support planned and ongoing operations.

Identifies asset capabilities, formulates mission tasking, and monitors results.

Evaluates the brigade and division schemes of maneuver and recommends the integration of EW.

Develops and maintains EW target lists and jamming schedules and other planning and coordination mechanisms to ensure engagement of key electronic targets with ECM systems at critical times.

Recommends to the G3, priority of effort for jamming after considering the enemy, terrain, scheme of maneuver, and expected jamming effectiveness.

Prepares the EW portions of estimates, plans, orders, and requests for ESM in coordination with the G3 EW staff officer.

Coordinates jamming ON-OFF control measures, and in the case of ON-OFF controlled jamming, provides mission initiation and termination orders using existing communications from the DTOC to the MI battalion TOC. This ON-OFF control is seldom instantaneous and usually requires planned cues to time the start and stop of jamming.

Assists the G3 in evaluating the effectiveness of EW activities in support of combat operations and recommends changes in unit task organization to achieve improved efficiency and effectiveness.

Reviews reports and evaluates hostile EW efforts, and in coordination with the C-E officer, recommends appropriate ECCM.

Assists in the evaluation of friendly EW operations to determine their effects on friendly C-E activities.

Assists in the preparation of emergency, contingency, and other plans, ensuring that EW capabilities and vulnerabilities are adequately considered.

Assists in the review of resource status reports (RSRs) for determination of the readiness of intercept and communications jamming assets assigned and under OPCON of the command.

Assists in integrating EW into programs of instruction, lesson plans, training exercises, and scenarios.

CI Analysis Section. The CI analysis section, under the staff supervision of the G2, provides CI analysis support to OPSEC, rear operations, and deception. The following illustration is a list of the support provided by the CI analysis section.

CI ANALYSIS SUPPORT PROVIDED BY THE CI ANALYSIS SECTION

Supports the command's OPSEC program by analyzing hostile intelligence collection capabilities, and working with the OPSEC staff element, compares enemy collection capabilities with divisional profiles to identify friendly vulnerabilities and OPSEC measures.

Supports the division's rear operations mission by identifying and recommending actions to neutralize level I and II threats.

Supports deception planning by recommending deception techniques as an OPSEC measure or in support of tactical deception operations. Its personnel are experts in counter-SIGINT, -HUMINT, and -IMINT.

OPSEC Staff Element. The OPSEC staff element assists the G3 in fulfilling command OPSEC responsibilities. Working closely with the CI analysis section, it performs the OPSEC management functions necessary for the development and implementation of the command's OPSEC program. In addition to these management tasks, the following illustration lists the OPSEC staff element's specific duties.

OPSEC SUPPORT PROVIDED BY THE OPSEC STAFF ELEMENT

Assists the G3 in developing essential elements of friendly information (EEFI).

Prepares the command's OPSEC plans and annexes.

Provides input to and reviews deception plans and related publications and documents.

Prepares and maintains the command OPSEC standing operating procedure (SOP).

Develops, implements, and supervises command OPSEC training and education programs.

Develops OPSEC evaluation requirements and missions and tasks them to the MI battalion through the CM&D section.

Terrain Team. The terrain team is a five-man team from the EAC engineer topographic battalion which deploys and works with the ASPS. Its working relationship with the USAF weather team and DTOC ensures rapid integration of terrain information with enemy and weather data to produce intelligence. Operating in DS of the division, it is under the staff supervision of the division G2. The team is composed of a terrain intelligence technician, two terrain analysts, a cartographic draftsman, and a clerk. The terrain team—

- ☐ Provides terrain analysis and maintains a terrain data base for the division areas of operation and interest.
- ☐ Assists the ASPS in its IPB functions by performing general and detailed terrain analysis and producing terrain factor overlays.
- ☐ Provides map evaluation support to the division and coordinates cartographic support through the corps terrain team and cartographic company.

The terrain team gathers terrain data from all-source intelligence reports such as postattack assessments, aerial imagery, reconnaissance patrol debriefings, and EPW interrogation and engineer reconnaissance reports. It correlates and analyzes this data with other terrain data on enemy LOC and facilities. It updates maps using all available environmental and weather data. The team maintains a close interface with its parent battalion at EAC and the corps terrain team for terrain analysis, map evaluation support, and terrain products that are beyond its own capability. FM 34-3 provides a detailed description of how the terrain team supports IPB.

Weather Team. A weather team from the supporting Air Force Air Weather Service (AWS) unit provides weather support for the division. The team consists of the SWO, a forecast element, and weather observing teams. The SWO is a member of the division special staff, operating under the staff supervision of the G2. The team has a 24-hour capability to observe and forecast weather.

Normally, the team forecasts weather for the division TOC, one airfield/helipad, and the maneuver brigades. It is capable of direct forecasting support to a brigade or airfield for limited periods.

The forecast element provides weather forecasting and climatic support to the division. It maintains the weather and climatic data base. It normally locates with the terrain team at the division main CP and provides climatic and weather products to support IPB. It receives weather data from the

orps weather team, weather observations rom its forward weather observation eams, and meteorological data from)IVARTY.

The division HHC provides the weather eam with its tactical equipment and nsures unit maintenance of common quipment, such as vehicles, generators, nd communications gear used by the /eather team. Weather team personnel perate and perform operator-level mainte- ance on its assigned equipment. The AWS rovides specialized equipment.

G3

The G3 is responsible to the commander or operations, plans, and training. He has taff responsibility for planning all division perations and directing the OPSEC, decep- on, and EW operations of the division. The W section of the DTOCSE reinforces the 3 in the management of division EW perations. As such, it operates closely with ne operations and plans branches of the 2, G3, FSE, and division C-E officer to nsure that EW is integrated with and sup- orts all division operations. The G3 inte- rates jamming with fire and maneuver, nd electronic deception with other forms of eception and OPSEC measures. He coor- inates ECM with the G2 and, in turn, eceives the intelligence and ESM needed to lan and execute ECM and ECCM. He oordinates ECM operations with the C-E fficer to ensure ECM does not adversely ffect division communications or the com- unications of other units operating in or ear the division AO. Additionally, the G3 oordinates with the C-E officer regarding CCM aspects of the division's EW perations.

The G3, with the assistance of the PSEC staff element of the DTOCSE, lans and directs OPSEC measures to pro- ect the command and its operations. He oordinates with the G2 for CI support to PSEC. He develops OPSEC evaluation issions and, assisted by the G2, directs ne task organization and ad hoc OPSEC valuation teams that carry them out. He oordinates with the G2 to ensure that vailable CI assets are used effectively to atisfy division CI and OPSEC evaluation eeds.

The G3 tasks the MI battalion to carry out ECM and OPSEC evaluation missions in coordination with the G2.

The G3—

- Plans and coordinates EW operations.
- Directs ECM actions needed to support planned and ongoing operations.
- Identifies, in coordination with the G2, ESM requirements to support ECM and ECCM.
- Coordinates with the C-E officer to establish ECCM to protect friendly C-E operations.
- Prepares the EW annex to operation plans (OPLANs) and operation orders (OPORDs).
- Identifies and recommends EEFI.
- Implements countermeasures to frustrate the enemy intelligence collection effort.
- Plans and coordinates deception operations to support the commander's scheme of fire and maneuver.

FM 101-5 and FM 34-1 provide detailed descriptions of the responsibilities and functions of the division G3.

FSCOORD

The FA commander is designated the FSCOORD. At the division level, the DIVARTY commander serves as the FSCOORD. The FSCOORD is responsible for—

- The proper integration and application of all fire support to enhance the scheme of maneuver. This is accomplished through the collective and coordinated use of target acquisition, indirect fire weapons, armed aircraft, and other lethal and nonlethal means in support of battle plans. (see FM 6-20, page 4-9).
- Planning and coordinating target acquisition, ADA fires, schedules of fires, deception operations by fire support means and the engagement of surface targets by air support, naval gunfire, chemical and nuclear weapons,

field artillery, and offensive electronic warfare systems.

- ☐ Providing information on the status of fire support and FA target acquisition means.
- ☐ Recommending the FA task organization.
- ☐ Providing status of FA ammunition on hand; recommending to the G3 the FA ammunition required supply rate, providing an estimate of the adequacy of the FA ammunition controlled supply rate (CSR), and recommending the CSR for subordinate commands.
- ☐ Recommending the allocation of nuclear and chemical weapons for fire support operations (that is the prescribed nuclear load (PNL)/prescribed chemical load (PCL) for FA units, subordinate units, supply points, and depots).
- ☐ Assisting in the preparation of OPLANs and OPORDs by providing information about fire support organizations and operations, to include recommending fire support coordination measures, high payoff targets, and priorities. The FSCOORD also supervises the preparation of the fire support annex and supporting appendixes.
- ☐ Coordinating FA survey within the command and with higher and adjacent commands.
- ☐ Providing technical assistance to the G2 in the study and evaluation of enemy fire support capabilities and weather/terrain effects on friendly fire support capabilities.
- ☐ Providing technical assistance to the G2 in supporting the battlefield surveillance plan.
- ☐ Preparing the fire support portion of the training program and supervising the FA training throughout the command.
- ☐ Monitoring the maintenance condition of FA equipment and advising the commander and responsible staff personnel on related problems.
- ☐ Coordinating FA target acquisition within the command and with higher and adjacent commands.
- ☐ Coordinating nuclear and chemical fires with the chemical officer.
- ☐ Submitting information and intelligence derived from fire support operations to the G2.
- ☐ Organizing and supervising the FSEs, fire support sections, and FISTs with supported units down to and including company and troop.
- ☐ Coordinating efforts to suppress enemy air defense with fire support means, both lethal and nonlethal.
- ☐ Coordinating the counterfire and interdiction fire effort of the force.
- ☐ Recommending and coordinating use of fire support means from other services and advising liaison representatives from supporting services.
- ☐ Developing, in coordination with G3, a fire support concept to support the battle.
- ☐ Providing fire support coordination representatives to assist the G3 air as a member of the airspace management element (AME).

The FSE is responsible for planning and coordinating fire support. The FSE staff is provided by the DIVARTY. The FSE—

- ☐ Advises on all fire support matters.
- ☐ Develops the fire support plan and coordinates its implementation, to include nuclear and chemical fires.
- ☐ Maintains a current status of all fire support means available to the force, to include FA, air support, naval gunfire, and offensive EW.
- ☐ Plans and coordinates fire support suppression of enemy air defenses (SEAD).
- ☐ Recommends FA organization for combat.
- ☐ Recommends target priorities (high payoff targets) for fire support.

The FSE is divided between the division's tactical and main CPs. The tactical CP FSE—

- Is responsible for fire support coordination for the current battle.
- Monitors current fire support operations to ensure that fire support is allocated properly and assesses the need for additional fire support for immediate and near immediate tactical situations.
- Maintains the status of fire support needs.
- Expedites immediate fire support needs.

Artillery targeting information obtained the tactical CP FSE is provided to the ctical CP G2 section as combat informa-n. The G2 section uses such information confirm other combat information ceived from units located in the MBA and its overall intelligence assessments that provides to the main CP G2.

The main CP FSE—

- Augments the capabilities of the tactical FSE as required.
- Plans fire support for future operations.
- Responds to requests for future additional fire support from subordinate commands.
- Develops, in coordination with other fire support representatives, fire support plans and disseminates them through the G3 section.
- Plans SEAD fires for both current and future operations.
- Recommends FA organization for combat, target priorities (HPT), and fire support coordination measures.

The relationship between the G2, G3, and SCOORD and the G2, G3 staff and FSE is ıe of mutual support. The G2, G3/S2, S3 ıd the FSE closely coordinate situation ıd target development. At battalion and igade, this is accomplished through per-nal contact between staff officers. Coor-nation between staff elements at division ıd corps requires SOPs to ensure ficiency.

The G2 provides timely intelligence to the SE for targeting purposes and assists the FSE in determining the best means of engagement to include nonlethal attack options. The G2 section also provides the high value target list to the FSE and technical considerations that may impact on the development of the high payoff target list. Additionally, the G2 section provides enemy intent and probable courses of action and movement for consideration in weapon and radar emplacement, fire planning, and ammunition requests. The G2's analysis of terrain and weather are also reviewed by the FSE for information impacting on weapon positioning, task organization, and fire planning.

The FSE provides targeting intelligence collected from direct observation by fire support teams, observation/lasing teams, aerial artillery observers, and target acquisition radars. Artillery observers provide damage assessments (when possible) from which the G2 determines the enemy force's level of attrition through fire support engagements and estimates of the enemy's strength and capabilities.

The FSE, through information and intelligence received from and given to the G2, provides for the proper integration and application of all fire support, lethal and nonlethal, to enhance the scheme of maneuver.

C-E Officer

The division C-E officer is responsible to the commander for all aspects of division communications. He is part of the division special staff and commander of the division signal battalion. He exercises overall direction of ECCM—one of the three major EW functions.

ECCM are executed by every element of the combat force that uses or is responsible for the use of electronic emitters. The responsibility for ECCM starts with commanders and extends to supervisors and operators at all levels. Techniques for reducing friendly vulnerabilities to enemy radio electronic combat (REC) efforts are directed through the Communications-Electronics Operating Instructions (CEOI), Communications-Electronics Standing Instruction (CESI), SOP, and other instructions.

Normally, the division C-E officer will coordinate all communications matters with the general staff. The functions of the division C-E officer are advisory: coordinating plans and orders, providing staff supervision and liaison, and supervising training.

The division C-E officer coordinates with and assists the G2 on—

- ☐ COMSEC equipment and procedures and ECCM actions.
- ☐ Interpretation of enemy signal documents.
- ☐ Evaluation of enemy signal equipment.
- ☐ Evaluation of MIJI reports.
- ☐ Establishment of multichannel circuits required for tactical SCI communications within the division.

The division C-E officer coordinates with the G3 on—

- ☐ Overall tactical communications activities.
- ☐ SED, MED, and tactical ECCM.
- ☐ Organization and signal equipment of division units.
- ☐ Division personnel training in communications activities.
- ☐ Selection of division CP locations based on communications requirements.
- ☐ Physical security of signal installations.
- ☐ Preparation of C-E annexes to the division SOP and division OPLAN including paragraph 5 of the division OPORD.
- ☐ Allocation and assignment of radio frequencies.
- ☐ Development of TABOO and PROTECTED frequencies to assist in controling the direction of ECM operations.

EW Staff Officer (ASI 5M)

Various positions in corps, division, and subordinate unit intelligence, operations, and C-E staff sections are manned by ASI 5M personnel. These personnel have been trained to plan, integrate, and coordinate EW in support of combined arms operations in the context of their normal staff functions. They assist the commander and principal staff officers in assessing how friendly and enemy use of electronic systems affect an operation. The 5M-qualified officer coordinates EW in support of the unit mission within his staff area of responsibility. He helps plan and execute EW training programs, prepares EW estimates and annexes to plans and orders, and provides staff supervision and evaluation of EW support operations.

The G3, 5M-qualified EWSO—

- ☐ Integrates EW planning into tactical plans and orders.
- ☐ Prepares, in coordination with the EW section of the DTOCSE, the EW estimate, the EW annex to command operational plans and orders, and the command SOP.
- ☐ Assists in the preparation of requests for the authority to conduct ECM operations.
- ☐ Determines requirements for preplanned EW support and recommends taskings for EW units and subordinate elements of the command.
- ☐ Advises and assists staff officers to develop electronic deception plans and within the G3, acts as the principal advisor on the technical aspects and requirements for electronic deception programs.
- ☐ Establishes safety procedures to ensure that active ECM equipment and operations do not endanger personnel or cause the degradation or malfunction of any nuclear weapons (including atomic demolition munitions) or any conventional weapons with internal electronic guidance and fusing. This requires coordination with explosive ordnance disposal (EOD) and other units to determine critical electronic thresholds to establish safety procedures and distances and frequencies to be avoided.

Assists in the exercise of command ON-OFF control of jamming operations.

Prepares for the G3, and in coordination with the C-E staff officer, TABOO and PROTECTED frequencies to assist in the control of ECM operations.

Receives and evaluates all reports of enemy jamming or suspected enemy jamming.

he G2 5M-qualified EWSO—

Assists the EW section, DTOCSE, and the G3 staff element to prepare EW estimates and annexes to plans and orders for pending and ongoing operations.

Coordinates with the intelligence collection manager to ensure that information needed to support EW is included in the collection plan.

Prepares the GUARDED frequencies list to protect intelligence sources for the G2.

he C-E staff 5M-qualified EWSO—

Prepares the signal and ECCM portion of the training program and provides staff supervision over signal and ECCM training for the command.

Provides input for the preparation of EW estimates, plans, and annexes.

Advises on the electromagnetic radiation environments in the command.

Determines local TABOO and PROTECTED frequencies in coordination with the G3 EW staff officer.

Coordinates measures to reduce electromagnetic radiation interference.

Coordinates MIJI reports with the EW section for possible immediate countermeasures.

Advises on the technical C-E aspects of electronic systems and devices.

Implements SIGSEC policy and procedures.

'he FSE 5M-qualified officer coordinates exchanging targeting information ned from division EW operations.

The division airspace management element (DAME) 5M-qualified officer coordinates airborne EW missions with the FSE and the air defense staff officer to preclude interference with planned operations of these activities.

MI BATTALION C^2 ORGANIZATIONS AND FACILITIES

The MI battalion responds to the guidance of the division commander and the G2 or G3 regarding IEW support to division elements and to mission tasking from the CM&D sections.

The MI battalion establishes a TOC from which the deployed assets of the MI battalion are controlled and a battalion trains to ensure that logistical support is provided to all battalion assets. These facilities are normally located close to each other (3 to 5 kilometers) and connected by land line and FM voice communications.

METT-T and the need for radio LOS with the DTOC and the battalion's forward deployed IEW company teams determine the location of the MI battalion TOC in the division area. It may be located forward in the division rear area or in a brigade's AO.

The MI battalion trains are positioned to maximize coordination with the MI battalion TOC, to provide access to major supply routes and brigade and division CSS centers, and to maximize the use of shelter and maintenance support facilities in towns and built-up areas. The battalion normally deploys company teams and assigns them standard tactical missions. This ensures that MI assets are organized and positioned to meet the division's needs. These company teams are under the C^2 of the MI battalion commander exercised by the MI battalion TOC/S3 who coordinates closely with the unit in whose area they are deployed. The following paragraphs describe how the MI battalion trains, TOC, and IEW company teams are configured and operate.

MI BATTALION TRAINS

The MI battalion trains are the focal point for administrative and logistical support in the battalion. The MI battalion

trains use existing buildings when possible and often locate in built-up areas. This reduces setup and teardown time for maintenance activities, improves access to major roads, and reduces power generation requirements as commercial sources may be used. The trains consist of the MI battalion XO, S1, S4, their staffs, and the maintenance and support elements of the MI battalion's HHSC.

The MI battalion trains support the MI battalion and its deployed assets by performing the following functions:

- ☐ Monitoring the battalion's personnel status and coordinating for the provision and distribution of replacements.
- ☐ Monitoring the status of all classes of supply in the battalion and ensuring that resupply is accomplished.
- ☐ Providing vehicular and communications maintenance and food service to all elements of the MI battalion TOC and trains.
- ☐ Providing vehicular, command, and IEW systems maintenance support to the deployed IEW company teams when their requirements exceed the capability or their assigned or attached service support elements.

The overall responsibilities of the XO and staff sections are as follows:

- ☐ XO. The XO supervises the staff and coordinates administrative and logistical support for the battalion. Normally, the commander delegates the authority that the XO needs to direct the staff. While each staff officer has direct access to the commander, the XO is informed of matters that are addressed through direct coordination between the commander and staff officers. The XO serves as the deputy battalion commander and makes command decisions in the absence of the commander. He assumes command of the battalion when the commander is incapacitated or when directed by the battalion commander.
- ☐ S1. The S1 is responsible for personnel management and administration. A list of his responsibilities is shown in the following illustration.

THE MI BATTALION TRAINS
S1 RESPONSIBILITIES

- Maintenance of unit strength.
- Management of personnel and manpower.
- Supervision of health services.
- Physical security.
- Headquarters management.
- Casualty reporting.

- ☐ S4. The S4 has staff responsibility for the logistical support within the battalion. He ensures the availability of supplies and services to all organic and supporting MI elements deployed throughout the division area and performs staff supervision of maintenance operations. The S4 coordinates with supported unit S4s for CSS of MI units operating in forward areas.

The MI battalion S4 acts as the net control station for the battalion's administration and logistics net, which connects the trains with the forward deployed service support elements with the IEW company team. The MI battalion trains staff elements communicate with the MI battalion TOC via landline telephone and FM radio and are subscribers in the division's general purpose RATT net as the MI battalion positions that RATT system in the trains. Communications net diagrams are provided later in this chapter.

MI BATTALION TOC

The TOC is the C^2 center for the MI battalion. Under the direction of the battalion commander or battalion S3, it performs asset management of organic, attached,

supporting intelligence and EW re-
rces. It provides the MI battalion com-
ıder with the centralized management
essary to ensure rapid, efficient response
ıission requirements.

MI TOC Composition

he TOC is composed of the MI battalion S3, their staffs, and the TCAE. The C-E f officer is also located in the TOC. The ›onsibilities of these sections are as ›ws:

S2. The S2 is the principal intelligence staff officer within the battalion and serves as the security manager, overseeing the establishment of personnel security procedures within the battalion. He is responsible for the establishment of emergency destruction and evacuation procedures within the TOC to ensure the security of its SCI holdings. He ensures that battalion SCI management, handling, production, and dissemination are consistent with national-level regulations and local procedures established by the division SSO. The S2 may be appointed as an alternate SSO. When deployed for combat, the S2 enters and monitors the division operations and intelligence (O&I) net and maintains a current intelligence SITMAP or overlay within the battalion TOC reflecting the current enemy situation as analyzed from reports monitored from the division's O&I net. The S2 also assists the S3 in assessing CI and IPW mission priorities as received from the CM&D section and recommends to the S3 those specific tasks required by CI and IPW elements in GS of the division to satisfy these missions.

- S3. The S3, as the battalion operations officer, has staff responsibility for operations, plans, and training in the battalion. He has staff responsibility for asset management for MI battalion resources, to include supporting or reinforcing MI assets and supervising battalion TOC operations.

  The S3 section supports the S3 in the management of MI assets. It reviews missions received from the division CM&D section, develops specific tasks, and identifies the assets that can best accomplish these tasks. It prepares and transmits tasking instructions less SIGINT and EW taskings which are prepared by the TCAE. Responsibilities of the S3 section are shown in the following illustration.

MI BATTALION TOC S3 RESPONSIBILITIES

- ıintaining continuous coordination with the CM&D section.
- ›eping abreast of the current battlefield situation.
- ›veloping plans for the employment of assets based on projected division and brigade operations.
- ınaging HUMINT, CI, ground surveillance, and SIGSEC (when attached from EAC) assets.
- tablishing SIGINT and EW priorities for asset tasking by the TCAE.
- ›eping the CM&D section advised of the current capabilities and operational status of battalion assets.
- rmulating and transmitting asset tasking, instructions, and messages.
- ıintaining the current status of assets through operational status reports received from battalion elements.
- ›nitoring task accomplishment and adjusting tasking when required.
- ıintaining necessary management records and logs.

- TCAE. The TCAE manages SIGINT and EW assets for the commander and S3 by providing technical control and tasking according to established SIGINT and EW priorities directed by the S3. It recommends to the S3 the task organization and technical employment of SIGINT and EW assets. Other responsibilities of the TCAE are shown in the following illustration.

MI BATTALION TOC TCAE RESPONSIBILITIES

Correlates signal intercept data to satisfy the division's SIGINT needs.

Processes first-level interpretations, transcriptions, and analysis of intercepted transmissions.

Provides SIGINT-produced reports to the G2/DTOCSE for further analysis and integration with information from other sources.

Provides technical control of SIGINT/EW systems.

Controls and disseminates SCI within the guidelines outlined by national level regulations and local procedures established by the division SSO.

The TCAE is organized as shown in the following chart.

The TCAE headquarters supervises and coordinates TCAE operations in response to mission guidance from the MI battalion commander and S3. It works directly for the MI battalion S3.

The operations section assists the TCAE headquarters in directing SIGINT and EW operations within the battalion. The section tasks, controls, and coordinates C&J assets. It also directs and coordinates the efforts of the analysis team to ensure that signal intercept data is fully exploited. Based on missions assigned by the S3 section, the

TCAE (MI BATTALION HEAVY DIVISION)

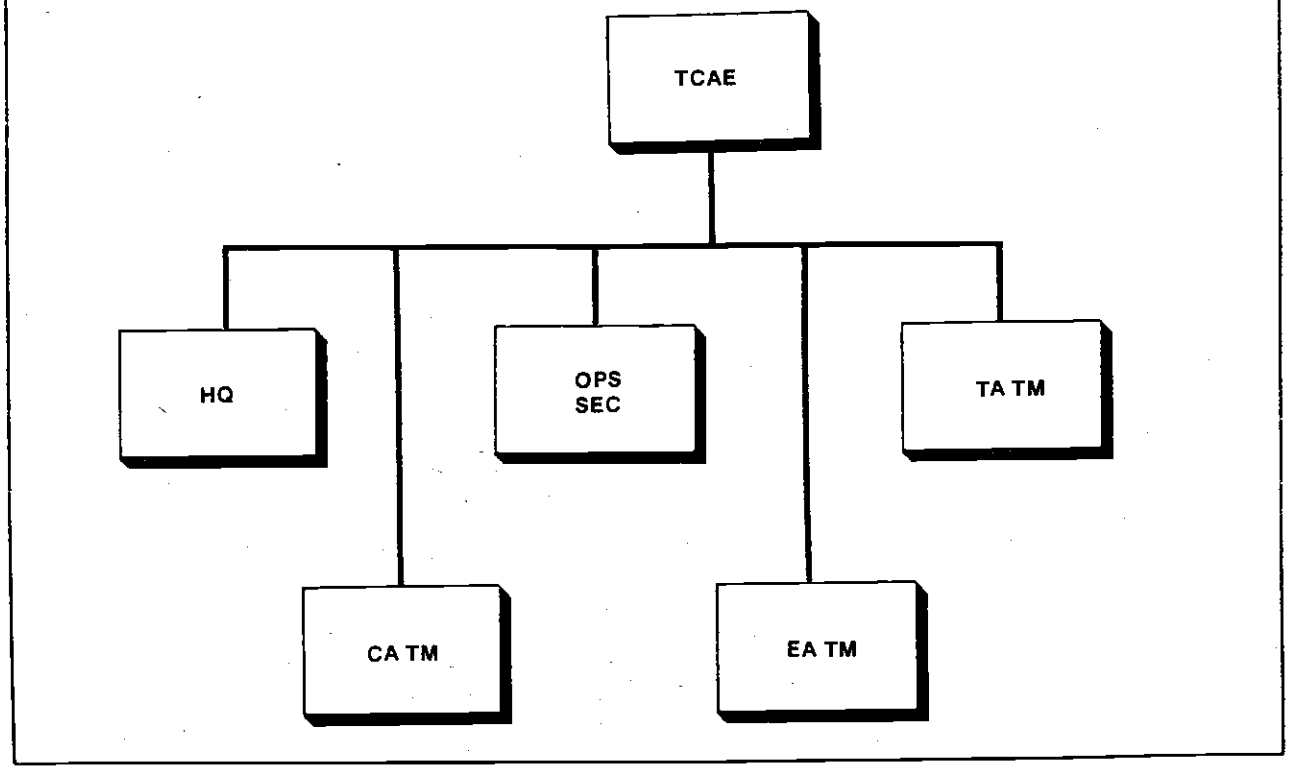

'AE operations section develops and ues specific tasking for battalion SIGINT d EW assets. It recommends the task ganization of assets to satisfy division uirements and to provide support to the gades and other subordinate units of the ision. It coordinates all SIGINT and EW ivities within the division to prevent necessary duplication, to attain selected lundancy, cuing, and mutual support; d to facilitate the technical hand off of emy elements as they move between sub-linate unit's area of interest. Because of tasking, coordinating, and controlling ponsibilities, the section must be fully are of all SIGINT and EW activities hin the divisional area. To ensure that s information is available, the section eives, sorts, catalogs, and distributes all ssages, data, and reports received at the 'AE. This includes technical information m—

Battalion resources.

Corps, EAC, and national systems.

Adjacent MI units.

The operations section develops and intains the technical data bases needed execute SIGINT and EW missions. It vides technical control data to all battal- and supporting SIGINT and EW assets, d as required, exchanges this data with ier echelons.

The operations section processes signal ercept data received from battalion ets and data provided by adjacent units d the corps TCAE. It focuses the process- effort on developing intelligence to isfy division needs and to add to the GINT and EW technical data base. It rdinates the effort of the three analysis ms (cryptanalysis, ELINT analysis, traf- analysis) by combining, correlating, and alyzing their products to develop a com- te picture of enemy signal activity within division area. When available, it also ludes information and intelligence from jacent divisions, corps, EAC, national encies, and other services. Specific pro- sing functions include—

Receiving, cataloging, and integrating all tactical reports (TACREPs), SIGINT hard copy, tactical ELINT (TACELINT), DF, and other technical reports pertaining to the division area.

- Correlating emitter locations to determine enemy force deployments.
- Correlating the SIGINT-derived OB with the data produced by the ASPS associating enemy emitters with specific enemy units.
- Responding to requests for technical support from SIGINT and EW elements of the battalion with data developed through integrated analysis.
- Formatting and releasing TACREP and other reports.
- Analyzing integrated data and producing necessary reports.
- Forwarding information and intelligence to the DTOCSE for further dissemination and correlation with other information and intelligence.
- Forwarding SIGINT and EW asset status reports to the CM&D section.

The traffic analysis team processes enemy communications traffic to produce SIGINT and to develop a SIGINT and EW technical data base. It compiles the enemy C-E EOB from its own analysis and reports produced by other SIGINT and EW units. The team—

- Maintains historical data on enemy communications, including net structures.
- Examines intercepted traffic for exploitable information.
- Develops enemy net diagrams to develop subordination within threat formations.
- Isolates individual transmitters.
- Correlates DF results to locate transmitters.
- Exploits captured enemy CEOI.

The cryptanalysis team exploits enemy low-level operation and numerical codes and ciphers to produce intelligence and to add to the SIGINT and EW technical data base. The team—

- Maintains data on known enemy cipher and code systems, including jargon and brevity codes.
- Receives copies of all enciphered traffic.
- Performs cryptologic diagnostic tests to determine code sytems in use.
- Assists in deciphering intercepted traffic.

The ELINT analysis team processes noncommunications signal intercepts for SIGINT information to construct the noncommunications portion of the EOB and to add to the SIGINT and EW technical data base. Primary functions include—

- Maintaining technical and OB information on noncommunications emitters.
- Comparing and correlating intercept recordings with technical and collateral information to identify emitters by type and function.

The C-E staff officer supervises communications operations within the battalion. He is the principal advisor to the battalion commander and staff on all communications matters. He plans, coordinates, and supervises C-E training and recommends employment of battalion C-E assets. The C-E officer manages the battalion's COMSEC and ECCM programs.

In the MI battalion TOC, he monitors the status of communications in the battalion and plans for changing requirements as MI facilities and assets move on the battlefield.

MI Battalion TOC Functions

The MI battalion TOC is the division's focal point for the employment and control of MI battalion assets. Its functions are—

- Overall C^2.
- C^2 of MI battalion assets.
- Control of subordinate company teams.
- Control of corps MI assets attached or under the OPCON of the division MI battalion.
- Provision of SIGINT and EW tasking to both GS and DS assets (through the TCAE).
- Provision of asset management and tasking for subordinate CI and IPW elements when deployed in GS of the division.

The MI battalion TOC exercises control over the subordinate elements of the battalion. It interfaces directly with IEW company teams and forward deployed elements, the QUICKFIX flight platoon (under the OPCON of the MI battalion), and corps MI elements attached or under OPCON of the divisional MI battalion. It directs and tasks subordinate assets according to missions assigned by the G2 and G3. It task organizes MI battalion assigned and attached resources to accomplish IEW missions.

Planning and task organizing IEW assets ensures the most effective mix and employment of these assets to accomplish assigned missions and support the division commander's concept of the operation. The MI battalion TOC plans and task organizes battalion resources according to the following principles of employment:

- Integrated support. IEW support is provided to each echelon and integrated with combined arms operations. This support may be responding directly to that echelon, or may be indirect as a unit receives the product or information collected by assets in GS.
- Centralized control/decentralized execution. Assets are positioned, allocated missions, and in the case of SIGINT and EW assets, provided supporting technical data by the MI battalion TOC. They execute these missions and rapidly report combat information. Control is centralized in order to provide the most effective support. Decentralized execution allows maximum flexibility in the execution of assigned tasks by subordinate elements.
- Direct dissemination to user. In any employment profile, a direct dissemination capability is established so that time-sensitive information may be provided by the collector to the user with minimum delay. Communications channels will be established to ensure all targets which meet the support unit

commander's attack priorities and target location error (TLE) requirements are transmited immediately to maneuver and FSEs at the appropriate echelon.

- ☐ Not in reserve. While IEW assets may be echeloned to provide support in-depth, they are not placed in reserve. They are always placed where they can contribute most effectively to intelligence collection and EW in support of the forces. Close coordination with other divisional and nondivisional elements is vital to effective IEW operations. These include the DTOCSE, operational MI assets, and other TCAEs.

The continuous flow of information etween the TOC and the DTOC forms ıe basis for all battalion operations. hrough communications with the 'TOC the MI battalion TOC—

- ☐ Receives mission tasking based on the IEW needs of the division commander.
- ☐ Reports combat information and intelligence from intelligence and EW sources. Non-SIGINT and EW assets report mission results directly to the CM&D section using existing division communication systems when in GS of the division, for example, CI, IPW, or directly to the supported unit when DS or attached.
- ☐ Reports the operational status and disposition of MI personnel and equipment.
- ☐ Coordinates tasking and priorities.
- ☐ Reports accomplishment of assigned missions.
- ☐ Receives all-source intelligence products, to include OB information produced by the ASPS.

The MI battalion TOC communicates 'ith battalion elements to—

- ☐ Task assets. Tasking includes technical, background, and associated information necessary to accomplish the task.
- ☐ Receive combat information and intelligence from SIGINT and EW collection elements for exploitation and further reporting.
- ☐ Receive operational status reports. Deployed SIGINT and EW assets report their status directly to the TCAE. Other DS or attached assets report through brigade IEWSE, while non-SIGINT and -EW GS assets (such as CI and IPW) report directly to the TOC.
- ☐ Coordinate, as required.

The TCAE is the focal point for the exchange of SIGINT and EW information in the division area. To ensure that information is available when and where needed, the TCAE must interface with—

- ☐ The corps TCAE.
- ☐ Adjacent division TCAEs.
- ☐ Adjacent allied EW units.

The TCAE relies on the corps TCAE for SIGINT and technical data base support. Corps provides technical data development by corps assets and by national systems. In turn, the division TCAE provides SIGINT technical data developed by division assets to the corps TCAE.

The TCAE also coordinates EW operations and exchanges data with adjacent divisions. In some cases this may be with an allied division. Regardless of nationality, effective coordination is vital concerning ECM operations near a common boundary.

The TCAE performs technical tasking of all SIGINT and EW assets in the division, regardless of the standard tactical mission given IEW company teams. If a company team with EW assets is in DS of a brigade, the IEWSE at that brigade will act as the interface between the brigade and the MI battalion TOC. The IEWSE will relay brigade mission tasking to the MI battalion TOC, where the TCAE will add technical data and task the EW element through the company team headquarters.

Upon receipt of mission tasking from the CM&D section at the DTOC, the S3 evaluates the mission and assesses mission requirements with the assistance of the TCAE chief (for SIGINT and EW missions) or the S2 (for CI or interrogation missions).

This assessment includes consideration of ongoing missions, availability of technical data, relative priorities, and the status of assets. For SIGINT and EW missions, the S3 then tasks the TCAE chief to perform the necessary planning and asset tasking. For CI and interrogation missions, the S3 section performs asset tasking with the assistance of the S2 staff. The communications nets used for this tasking and for reporting are described later in this chapter. The MI battalion TOC configuration, with the communications used to accomplish the tasking and reporting described above, is shown in the following illustration.

MI BATTALION TOC CONFIGURATION

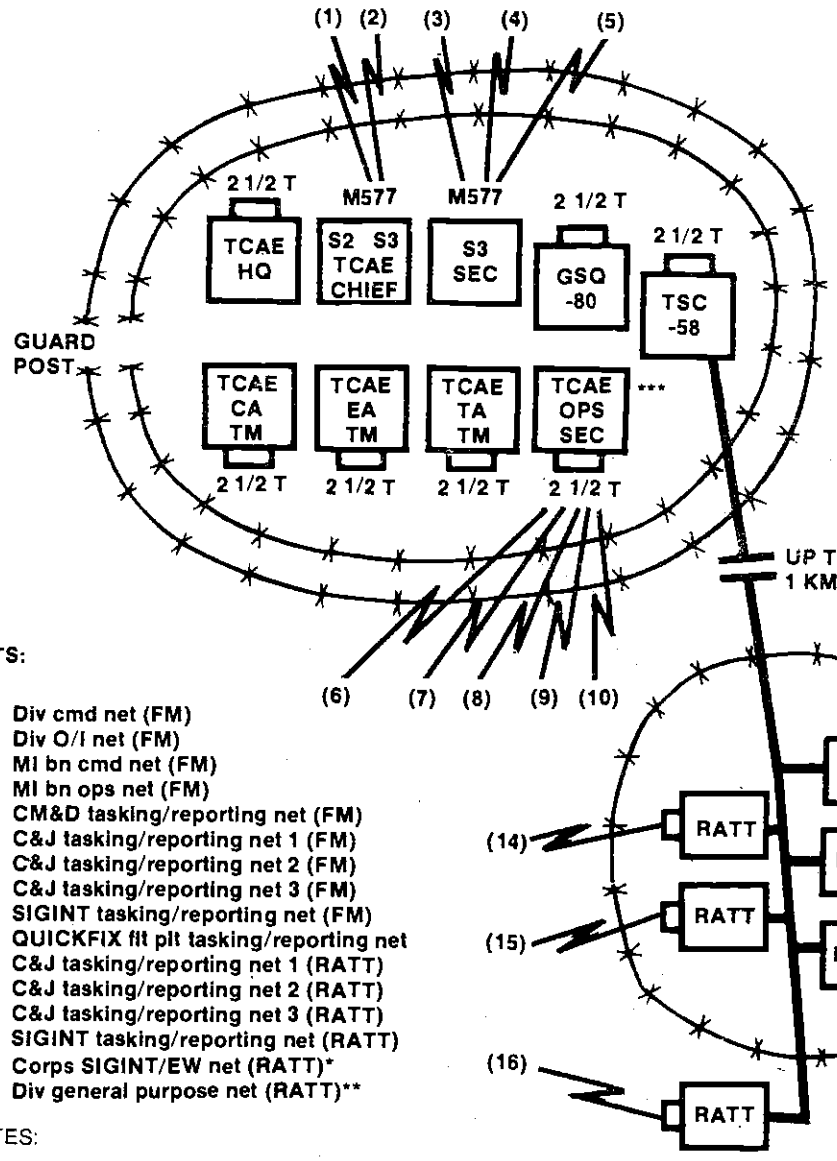

NETS:

(1) Div cmd net (FM)
(2) Div O/I net (FM)
(3) MI bn cmd net (FM)
(4) MI bn ops net (FM)
(5) CM&D tasking/reporting net (FM)
(6) C&J tasking/reporting net 1 (FM)
(7) C&J tasking/reporting net 2 (FM)
(8) C&J tasking/reporting net 3 (FM)
(9) SIGINT tasking/reporting net (FM)
(10) QUICKFIX flt plt tasking/reporting net
(11) C&J tasking/reporting net 1 (RATT)
(12) C&J tasking/reporting net 2 (RATT)
(13) C&J tasking/reporting net 3 (RATT)
(14) SIGINT tasking/reporting net (RATT)
(15) Corps SIGINT/EW net (RATT)*
(16) Div general purpose net (RATT)**

NOTES:

* Equipment and operators provided by MI brigade at corps.

** Equipment and operators provided by division signal battalion. May be located at MI battalion trains to facilitate administration and logistical traffic. Operates at collateral SECRET level.

*** In MI battalions equipped with the TCAC-D system, two TCAC-D configured 5-ton vans will augment the four 2-1/2 ton vans (TCAE CA TM, TCAE EA TM, TCAE TA TM, and TCAE OPS SEC).

The TCAE exercises technical control of e three C&J platoons, the SIGINT prossing platoon, and the CEWI (QUICK-X) flight platoon which is under OPCON the MI battalion. Based on the tasking of e S3, the TCAE adds technical data garding frequencies, call signs, schedules, ıd equipment parameters to the mission, ıd tasks the appropriate platoon.

The MI battalion commander, through e S3, maintains tactical control of all batlion elements that are not attached to disional units. Through close coordination ith the division G3, brigade S3, IEWSE at igades, and IEW company team comanders, he exercises tactical control by ordinating and directing the movement of W assets on the battlefield, DS and GS, to eet current and projected mission quirements. The S3 is the battalion comander's senior resource manager. While S IEW elements coordinate movement of sets with their supported brigade via the WSE, they must also coordinate such ovements with the MI battalion S3, who ıows the current status of the division's erations and IEW requirements and erational constraints on technical sysms performance. The S3 section closely onitors the teardown, movement, and tup of assets via communications with .e company team headquarters so as to ways be aware of the availability of sets to meet short-notice requirements. ıe TCAE supports the S3's execution of ctical control by recommending suitable tes for SIGINT and EW systems based on chnical factors.

When the tactical situation requires ovement of the MI battalion TOC, the splacement of this C^2 facility is accomished in two stages, starting with the ploymentof a jump TOC. Part of the staff the TOC moves to the selected new locaon, while the remainder continue to conol the operations of the battalion from the isting facility.

When the first section arrives at the new cation and initiates operations, the second age of the displacement occurs. The jump OC assumes control of the battalion's sets, and the staff at the main facility scontinues operations and shifts to the w TOC location. Risk is accepted in the splitting of the battalion TOC but minimized through prior planning and rehearsal during training of jump TOC operations.

The jump TOC must include—

- ☐ Necessary personnel to provide for the tactical control of battalion IEW elements while the primary TOC is moving.
- ☐ Essential communications to operate internal command nets, operations nets, and technical nets, (for example EW nets) and continue essential communications on external nets in which the battalion must maintain communications (division command, CM&D tasking and reporting net).
- ☐ Essential SIGINT analysis capabilities for MI battalion collection capabilities.
- ☐ Support and security personnel to sustain jump TOC operations during the teardown, movement, and re-establishment of the battalion's main TOC elements. The primary TOC maintains control of battalion elements until the jump TOC is in position and reports its preparedness to assume total control of the battalion's operations. Transfer of control is formally announced on all internal battalion communication networks to avoid confusion and ensure continuity of operations.

With the large number of communication modes and means available within the battalion, care is taken to replicate mission essential networks when organizing the jump TOC. Where redundancy is present in the mode of communications during full TOC operations (FM, RATT, multichannel), the jump TOC is normally provided with one of these modes. For example, the coordination and exchange of technical SIGINT/EW information between the TCAE at corps and division is accomplished over HF RATT and multichannel circuits. The jump TOC would normally be configured to include the corps MI brigade's HF RATT team providing TCAE-to-TCAE coordination, leaving the multichannel terminal and communications center at the main TOC for continued use during the displacment of the jump TOC.

When redundant modes of communica-

tions do not exist, duplication of means between the main and jump TOCs must be configured. FM voice nets will be used at both TOCs as a means of control on internal and external networks. By using call sign expanders, confusion is avoided in the identification of main and jump TOC elements on the same voice networks. When duplicate nets cannot be configured due to the limited number of FM radio terminals, the commander or S3 may require that select elements double up on designated nets. This may entail placing C&J platoons 1, 2, and 3 on a single FM tasking and reporting net with the TCAE during the period of the jump TOC operations rather than three distinct nets normally used. Risk is minimized by rehearsal and planning, but a degree of risk does exist in continuity of operations when the use of a jump TOC is required by the battlefield situation. A type jump TOC for the MI battalion, heavy division, may be configured as shown below.

JUMP TOC

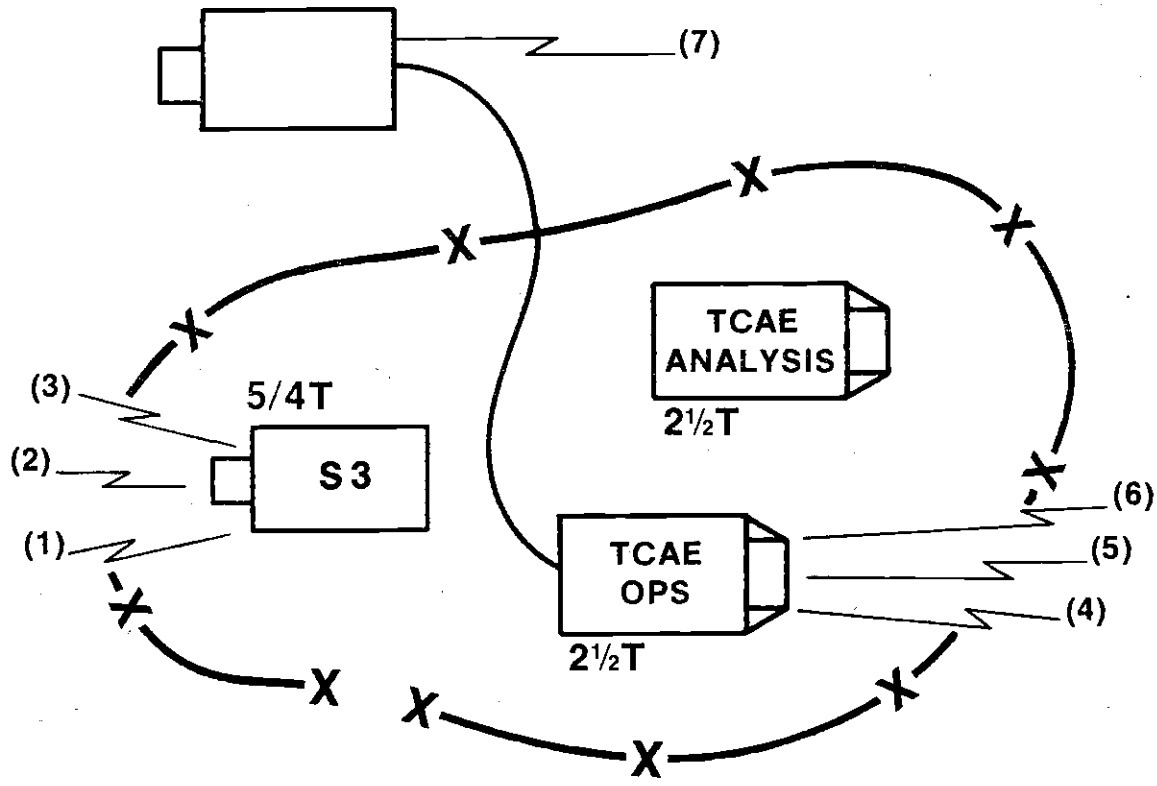

(1) MI BN OPS NET (FM)
(2) DIV CMD NET * (FM)
(3) CM&D TASKING/REPORTING NET (FM)
(4) C&J TASKING/REPORTING NETS 1, 2, 3 ** (FM)
(5) SIGINT TASKING/REPORTING NET (FM)
(6) QUICKFIX FLT PLT TASKING/REPORTING NET (FM)
(7) CORPS SIGINT/EW NET (RATT)

* Monitors only with R442 (AUX RCVR).
** Consolidated on one frequency.

The elements comprising the jump TOC ›rmally include the S3, select members of e S2 and S3 staff, the battalion C-E offi- rs, a carefully selected element of the :AE, and minimal support personnel quired to assist in the establishment of e jump TOC and maintain its security. ıe jump TOC will normally include the 's 5/4-ton vehicle, communication and ıalyst shelters from the TCAE, and may clude one M-577 command track carrier. the jump TOC is expected to operate for ı extended period of time, an M-577 is cluded to take advantage of its communi- tion and space capabilities. The con- ıued integrity of the battalion's main)C operation will normally dictate the ntinued use of battalion C&J and GINT platoon RATT networks and multi- annel communications at the main TOC :ation. When the battalion S3 acts as the :C of the jump TOC, his designated sistant S3 will remain as the OIC of the ain TOC.

Reconnaissance and selection of the jump)C location is accomplished by the S3 and e battalion C-E officer to ensure that erational communication requirements sociated with jump TOC operations are lly considered.

Risks assumed with the jump include—

- No duplication of the division O&I net or MI battalion command net at the jump TOC.
- Potential delays in SIGINT reporting or tasking of C&J platoons while all platoons are subscriber on a single FM net.
- No redundancy in means or modes of communication.
- No redundancy on voice communication for control, coordination, and reporting within the MI battalion.

While these risks are present, they clearly tweigh the alternative of taking the MI ttalion TOC entirely out of operation dur- g a single move.

IEW COMPANY TEAMS

As the assets of the MI battalion are task ganized, IEW company teams are created. ıese contain the mix of assets selected by e MI battalion commander and his S3 to rform a specific mission. When sufficient sets are operating in the same area, and to enhance MI battalion internal command and control of operational elements, a company team will be created to command them. These company teams may be in DS of a maneuver brigade or in GS of the division. The designation of standard tactical missions of DS, GS, and so forth will be determined by the battalion commander in coordination with the desires of the division commander and recommendations of the G2 and G3. The means of stating standard tactical missions for IEW elements is through annex A of the division or brigade OPORD as well as the MI battalion OPORD. No standard mix for a company team exists, as they are structured to meet the needs of a specific situation and based on the factors of METT-T. Examples of the company teams will follow later in this chapter.

Company commanders assigned to the MI battalion respond directly to the battalion commander on all C^2 matters. They respond to the battalion staff on matters within the staff's functional areas and delegated authority. They are responsible for the performance of their companies and exercise command authority over all organic and attached company elements. They ensure that company operating elements are fully trained, equipped, and maintained to perform assigned missions. Commanders select the site for their company CP and supervise the deployment of their elements. They inspect company elements, correct deficiencies, and solve problems that prevent the accomplishment of the unit's mission or significantly reduce its effectiveness. They coordinate with appropriate battalion staff elements for required support. Asset tasking for their subordinate elements orginates with the MI battalion TOC and its TCAE.

Company Team Missions

During IEW operations, MI assets are assigned standard tactical missions. Standard missions describe the IEW support responsiblities for an MI unit. They also establish an MI unit's relationship to a supported force or another MI unit. Standard tactical missions do not affect the organizational structure or the command relationship that results from that structure. The four standard tactical missions are—

- ☐ DS.
- ☐ GS.
- ☐ Reinforcing.
- ☐ GS reinforcing.

An MI element in DS of a specific unit will respond to the requirements of the supported unit as first priority and then the priorities of the parent unit. The supported unit will identify its requirements through liaison elements, which will route them to the MI element for execution. As well as their first priority to respond to the requirements of the specified unit, DS elements have a second priority to respond to the needs of the force as a whole. A unit in DS has no command relationship with the supported unit, and remains under the C^2 of its MI chain of command. The centralized technical management of SIGINT operations will be maintained by the MI battalion regardless of standard tactical missions assigned.

An MI element in GS will provide support to the force as a whole and not to any particular subordinate unit. It responds to the requirements of the force commander, as tasked by the MI battalion TOC.

The IEW capabilities of MI units are extended by MI units reinforcing other MI units. Reinforcing MI units remain under the command of the MI commander assigning the reinforcing mission, while OPCON is retained by the MI unit being reinforced. The reinforcing mission permits increased support to specific maneuver units without giving up complete control of MI assets to the supported elements.

An MI element assigned a GS reinforcing mission is required to respond first to the IEW requirements of the forces as a whole and then to reinforce the activities of another specified MI element as a second priority. The GS reinforcing mission gives the force commander the flexibility needed to meet the changing tactical situation.

There are inherent responsibilities within each of the four standard missions. The following matrix illustrates these responsibilities.

STANDARD TACTICAL MISSION RESPONSIBILITIES MATRIX

AN MI UNIT WITH MISSION OF... / RESPONSIBILITY	DIRECT SUPPORT	GENERAL SUPPORT	REINFORCING	GENERAL SUPPORT REINFORCING
• Responds to request of	• Supported unit • Force as a whole	• Force as a whole	• Reinforced MI unit	• Force as whole • Reinforced MI unit
• Technical control	• MI bn TOC	• MI bn TOC	• Reinforced MI unit • MI bn TOC	• MI bn TOC • Reinforced MI unit
• Zone of Action	• Supported units area of ops • Div area of ops	• Div area of ops	• Same as reinforced MI unit	• Div area ops • Same as supported unit
• Furnishes IEW support element	• MI battalion provides an IEWSE to each maneuver brigade regardless of what MI assets are in the brigade AO.			
• Establishes communication with	• Supported unit • MI bn TOC	• MI bn TOC	• Reinforced MI unit	• Reinforced MI • MI bn TOC
• Is positioned by	• MI unit cdr in coordination with supported unit	• MI bn TOC	• Reinforced MI unit or as ordered by MI bn TOC	• MI bn TOC or reinforced MI unit if approved by MI bn TOC
• Tasked by	• Supported unit • MI bn TOC	• MI bn TOC	• Reinforced MI unit	• MI bn TOC • Reinforced MI unit

Standard tactical missions are not com-
ıand relationships. They clearly define the
riorities of support, but in all cases, C^2 is
xercised through the MI chain. A company
ıam may be assigned any of the four
:andard tactical missions. The assets and
ıissions assigned to company teams will
e determined by the MI battalion com-
ıander. He will make these determinations
ased on the division concept of operation
nd the guidance of the division com-
ıander, G2, and G3.

MI Battalion IEW Company Team CP

The IEW company team CP is where the
ɔmpany team commander commands and
ıctically controls the unit's assets. It con-
ısts of the company commander, first ser-
eant, company supply section, and the
ervice support element attached to the
ɔmpany from HHSC during task organiza-
on. The CP will also include the platoon
perations center of the C&J platoon, which
ı made up of that platoon's headquarters
ection and its T&A team.

From this CP, the location and status of
ıe IEW company team's assets are moni-
ɔred and controlled, C&J assets are tasked,
ıeir reports processed, efforts of CI or
ıterrogation assets (when attached to the
EW company team) are directed, and
ıaintenance resources are dispatched to
ıaximize asset availability.

Communications in the company team
:P include nets dedicated to each of the
ınctional areas: MI battalion command
nd operations nets, battalion administra-
ıve and logistics net, and the technical
:&J tasking and reporting net. Information
ı passed to the IEWSE at the brigade TOC;
II team asset locations are coordinated
hrough the IEWSE with the brigade S3;
asking is received from the MI battalion
'OC and directed to specific assets for exe-
ution; and maintenance or administrative
ıeeds are coordinated. A deployed IEW
ompany team CP, the IEWSE in a brigade
'OC, and part of the MI battalion TOC
vith their communications links are shown
n the following illustration.

Intelligence and Electronic Warfare Support Element

An IEWSE is provided by the MI battalion S3 section to each of the three maneuver brigades. This element is vital to effective MI support to the brigade. When an IEW company team is deployed into a brigade AO, the IEWSE is attached to the company team. It assists the team commander in coordinating MI operations and support while in the brigade AO. It advises the brigade commander and staff on the integration and use of MI assets to support the brigade's battles. The IEWSE is dependent on the brigade for logistical support. It is responsive to requirements levied by both the supported brigade and the supporting IEW company team. The IEWSE—

- ☐ Establishes liaison between the MI battalion, IEW company team, and the brigade commander and staff.
- ☐ Advises the brigade S2 and S3 on the capabilities, limitations, and employment of supporting MI assets.
- ☐ Assists the brigade S2 and S3 in planning the use of supporting MI assets and in preparing taskings.
- ☐ Coordinates with the company team commander to ensure rapid response to requirements.
- ☐ Ensures rapid dissemination of collected combat information from MI elements, as directed by the brigade commander.
- ☐ Coordinates with the MI battalion TOC on all matters concerning MI support to the brigade.
- ☐ Monitors the SIGINT and EW tasking and reporting net for assets within the brigade sector.
- ☐ Maintains communications with the MI battalion TOC on the MI battalion operations net.
- ☐ Ensures that deployed MI elements are advised of friendly force maneuvers that will affect their security.

DEPLOYED IEW COMPANY TEAM

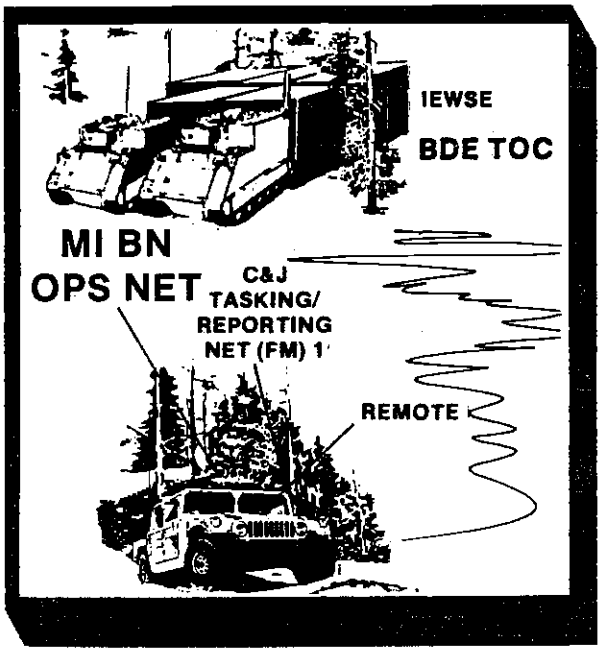

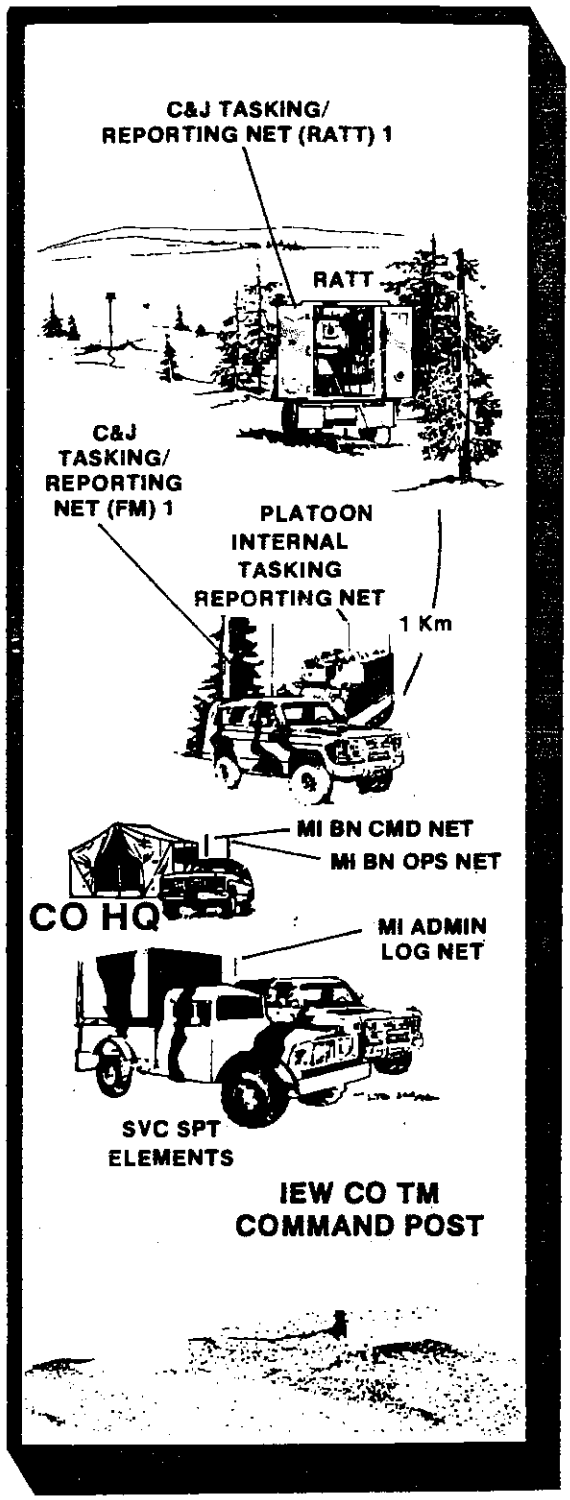

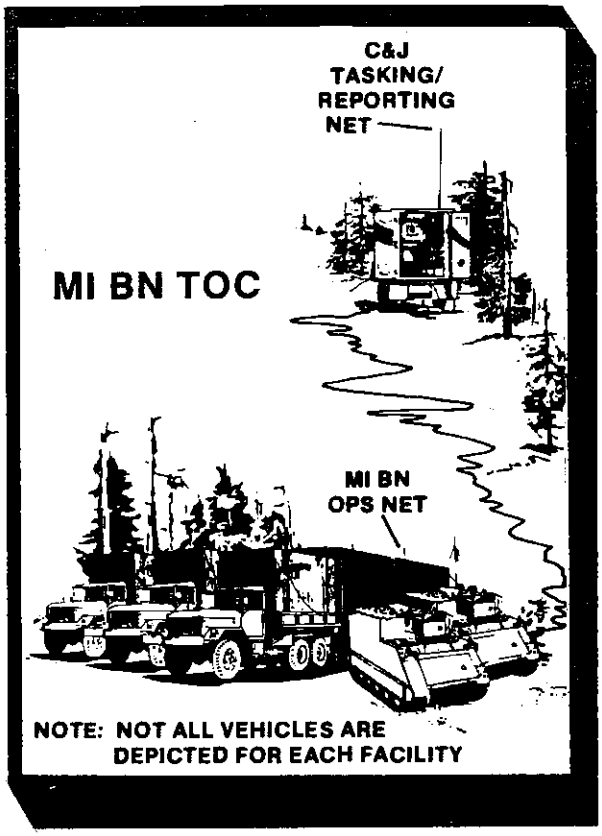

160-850 O - 94 - 3

- Coordinates with the brigade staff to ensure availability of operational sites within the brigade sector and necessary support for MI team movement or routes within the brigade AO.
- Requests additional MI support when required.

Company Team Examples

One example of an IEW company team follows:

SITUATION: The guidance of the division commander is to provide direct IEW support to the maneuver brigades. The following organizational chart is a typical structure of a DS company team.

IEW COMPANY TEAM (DIRECT SUPPORT)

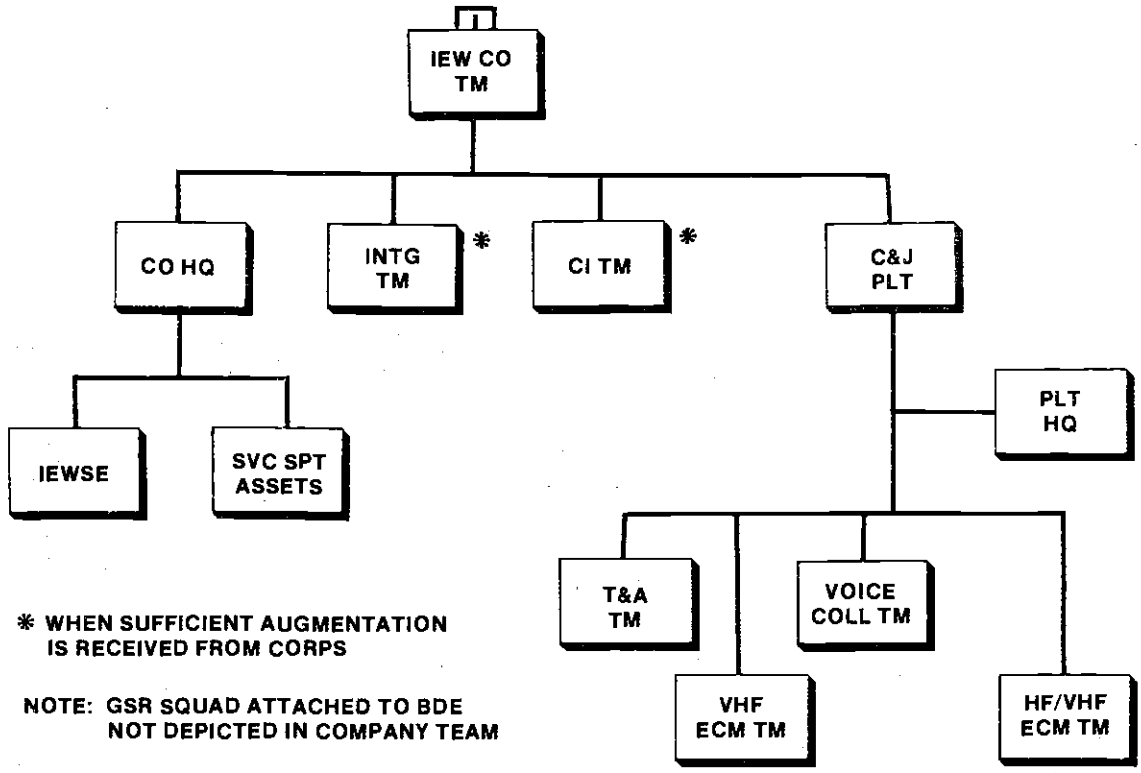

* WHEN SUFFICIENT AUGMENTATION IS RECEIVED FROM CORPS

NOTE: GSR SQUAD ATTACHED TO BDE NOT DEPICTED IN COMPANY TEAM

As this company team is in DS, the first priority of IEWSE assets is to IEW requirements of the brigade that it supports. Its second priority is to overall divisional requirements. The MI battalion TOC will manage brigade and division priorities and provide direct tasking to SIGINT and EW assets placed in DS of a force. The C&J platoon receives technical tasking from the TCAE. The IEWSE coordinates brigade SIGINT and EW requirements with the MI battalion TOC while non-SIGINT assets are tasked directly by the IEWSE or brigade. The IEWSE receives combat information directly from the assets of the company team. The maintenance assets that are task organized and attached to the company team would include communication, vehicular, and IEW systems maintenance personnel as all types of assets are attached to this IEW company team. In addition to its own assets, a DS company team is responsible for providing and coordinating administrative and logistical support to any GS IEW elements operating in the brigade area. If there are no DS IEW company teams, GS assets operating in the brigade areas receive administrative and logistical support from their parent company team and from brigade support elements based on prior coordination.

A second example of an IEW company team follows:

SITUATION: There is a single major avenue of approach into the division area. The division commander wants to consolidate most IEW assets to focus on that avenue of approach. A GS company team for this situation might be as shown in the following organizational chart.

IEW COMPANY TEAM (GENERAL SUPPORT)

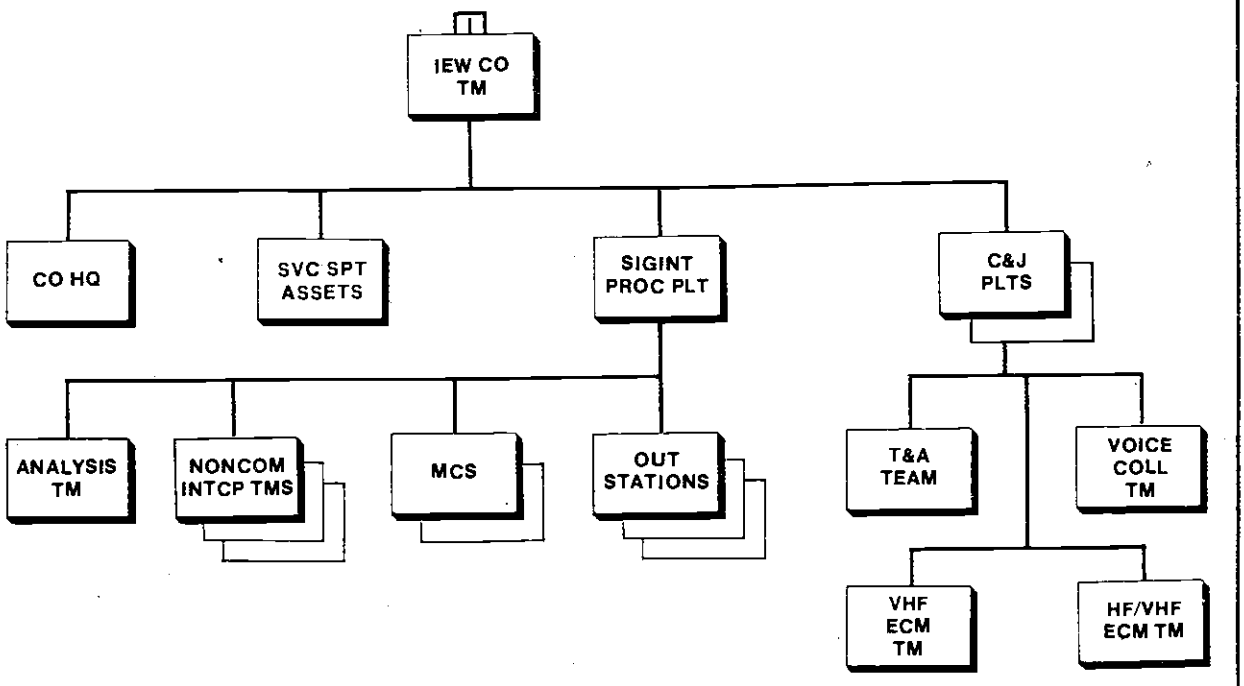

As this company team is in GS, its priori-
es are the IEW requirements of the divi-
ion. Its tasking comes from the MI battal-
on TOC with technical tasking for the
IGINT processing platoon and C&J pla-
oons tasked from the TCAE. Combat
nformation from company assets will be
eported to the brigade IEWSE by the MI
attalion TOC/TCAE. Assets of this com-
any team may be deployed in more than
ne brigade area. The company team head-
uarters is responsible for administrative
nd logistical support to company assets.
ogistical support from brigade CSS ele-
ients will be provided, based on prior
lanning between the MI battalion S4 and
ne brigade staff.

COMMAND AND CONTROL COMMUNICATIONS

The air-land battlefield is dynamic,
thal, and places demands on tactical
ommunications systems not experienced in
ne past. Communications systems must be
apable of delivering the information to the
ommander that he requires for decision
aking quickly and in a form that facili-
ates the decision-making process. Division
ommanders must be able to turn their
ecision cycle inside that of the enemy.
apid, reliable, and secure communications
re the means by which this can be
ccomplished.

Rapid and secure communications pro-
ide a means for tasking and coordinating
EW resources and for receiving intelli-
ence, combat information, and targeting
ata from these assets. It also provides a
eans for divisions to receive information
nd to disseminate intelligence, combat
nformation, and targeting data to their
ubordinate maneuver units and FSEs.

The following paragraphs describe the
ommunications systems that support divi-
ion IEW operations. It describes division
EW communication requirements and the
omplementary intelligence and EW nets of
he division.

The communications system supporting
ivision IEW operations is primarily com-
osed of multichannel, HF RATT, and VHF FM nets. Wire is used as a backup system for FM radio, and messengers are used for bulky items and large quantities of messages. Retransmission stations extend the range of FM radio communications. Intelligence nets are established at each level of command throughout the division.

COMMUNICATIONS MEANS

Divisions rely on multiple means of communications. Multichannel, wire, and other systems are integrated to complement each other. This provides maximum flexibility, reliability, redundancy, and responsiveness to commanders' IEW and operational needs.

Multichannel

The division signal battalion installs and operates three area signal nodes in the heavy division and two area signal nodes in the light division, providing multichannel communications between all division CPs and those of MSCs and most separate battalions. This multichannel system, operated on a common-user, dial-up basis, provides for secure voice, facsimile, and COMMCEN traffic within the division, and between the division, adjacent units, and the corps' major CPs. Multichannel also provides the circuit for communications between many of these CPs using the maneuver control system's tactical computer system (TCS), and tactical computer terminals (TCT) fielded under the site information generation and materiel accountability (SIGMA) program. Multichannel communications serve the IEW system within the division as the primary means of reporting and disseminating from the brigade main CP and higher. Encrypted at the SECRET level, multichannel communications are further encrypted by crypto systems within the COMMCEN (AN/TSC-58) for record copy SCI traffic between the division SSO, the MI battation TOC, and SSO sections within adjacent divisions and the corps. The two illustrations that follow show the heavy division's three nodes and the light division's two nodes multichannel communications systems. These systems provide reliable, redundant, secure communications for C^2, operations, and intelligence and administrative logistical traffic within the division.

HEAVY DIVISION (3-MODE) MULTICHANNEL SYSTEM

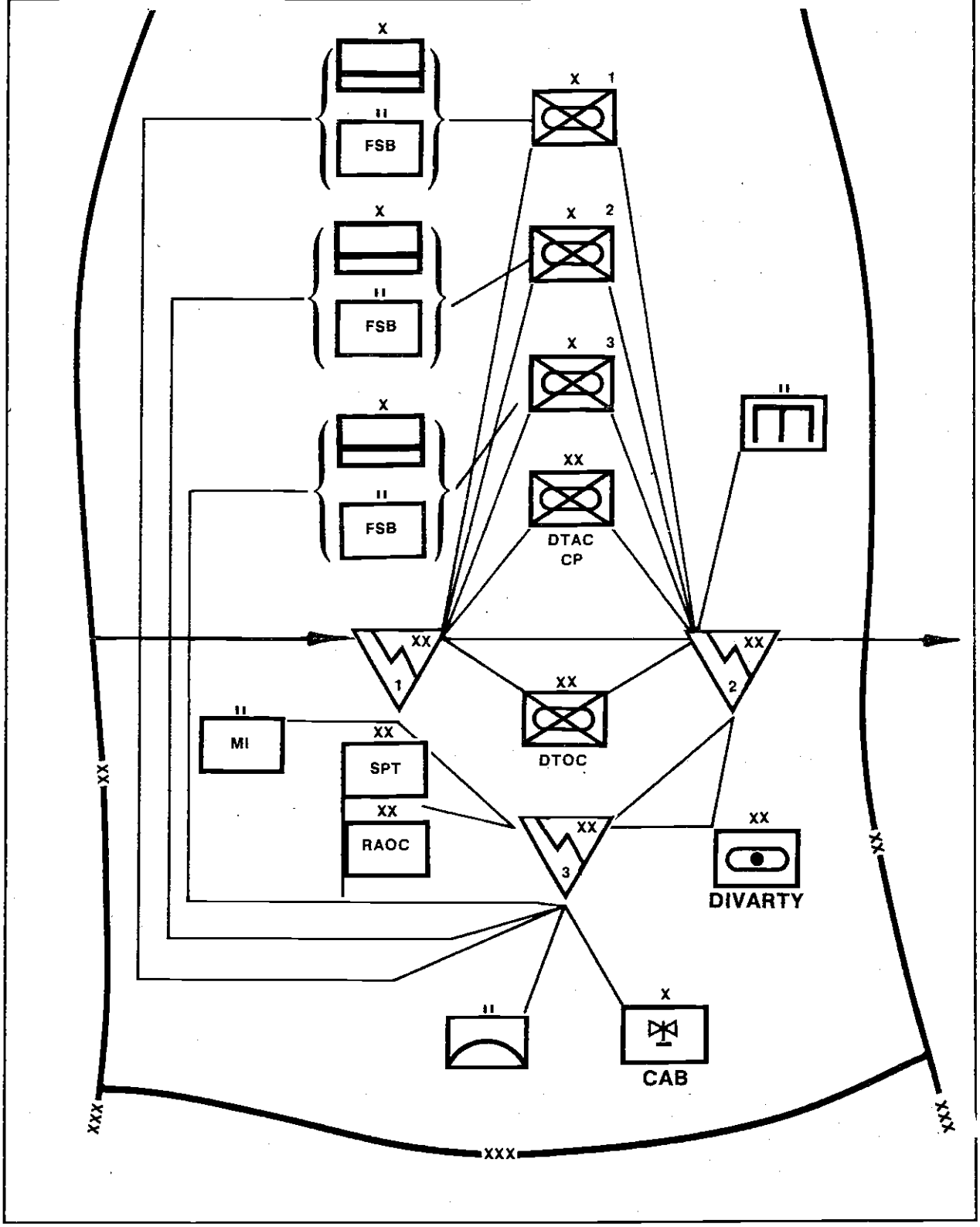

LIGHT DIVISION (2-NODE) MULTICHANNEL SYSTEM

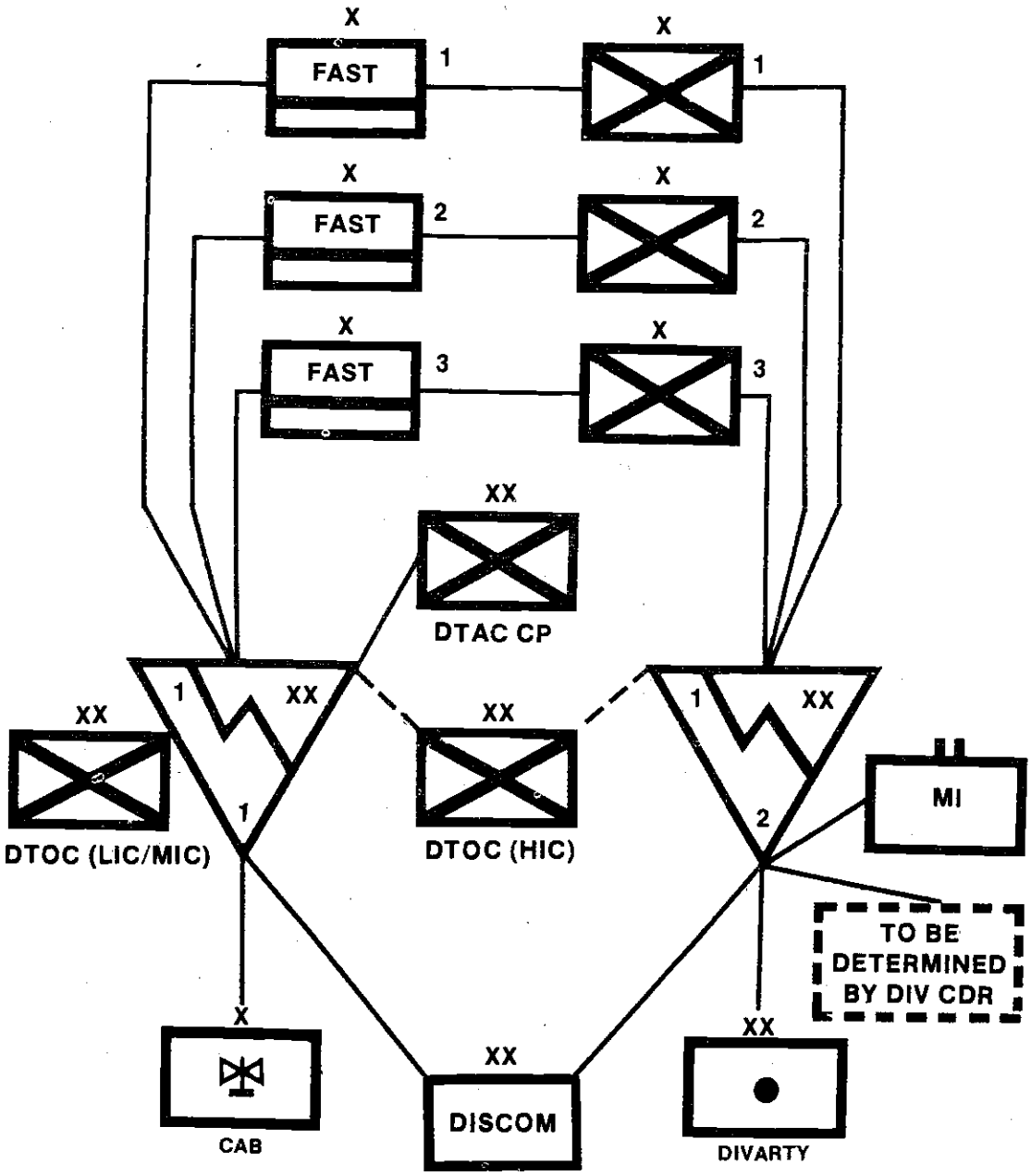

HF RATT

The HF RATT serves as the primary backup means of communications in the division. RATT provides a rapid method of transmitting lengthy and technical information at the collateral level. HF RATT requires greater power, more maintenance, and higher quality circuits than simpler means of communications such as wire or FM radio. Some SIGINT and EW elements located in the brigade AOs may have RATT capability; however, this capability is used for communications with the MI battalion TOC and TCAE. There are no direct RATT links to the brigade from IEW elements operating within the brigade AO.

Radio Nets

Secure VHF FM and UHF communication means are used for C^2 purposes and to interface most of the IEW elements. These communications—especially the data systems—are fast and can handle large amounts of traffic. They need a minimum of personnel and space for equipment and can be remoted or operated while on the move. They can also be integrated into compatible wire systems providing a radio wire integrated system. Retransmission of these secure communications increases their range for enhanced C^2. Limitations include a high susceptibility to jamming or interception and interference from atmospheric, terrain, man-made sources, and constraints on placement within tactical SCIFs if not protected by security equipment. If security equipment is not used, FM radio is the least desired means of communications. Critical command, control, communications, and intelligence (C^3I) facilities can be immediately identified by enemy SIGINT units and targeted by both lethal and nonlethal attack systems.

Wire

Wire communications (telephone) is a backup system for FM radio. It is one of the most dependable means of communication and is more secure from unauthorized radio interception than radio if the line is guarded from point to point. It is not vulnerable to enemy electromagnetic disruption or DF, although wire can be tapped (with or without a physical connection) if the wire is not covered or guarded. Wire is generally used to interconnect closely located activities, to integrate radio with wire, or to tap into existing commercial lines.

One of the major disadvantages of wire is that it cannot be used under mobile conditions. It also requires more time, personnel, and equipment to install and maintain than radio. Even when it is laid properly, signal integrity diminishes over long distances. When it is not laid properly, it may be damaged by tracked and wheeled vehicles or be susceptible to wiretaps. It is also susceptible to sabotage by low-level agents and infiltrators.

Division's normally use wire for internal communications within their CP and assembly areas. MI and other units use wire to remote active COMJAM systems and other emitters from their actual locations for survival purposes when the situation permits.

Messengers

Messengers provide a secure means of delivery for bulky items and large quantities of message traffic. The use of messengers is limited only by the availability of trained personnel, transportation, the tactical situation, and the security clearance of the courier. Using messengers eliminates the electromagnetic signature and provides a means of communicating if electrical means are destroyed or their use is inadvisable. Although messenger service is very flexible, it is slower than electrical transmission. Weather, terrain, and operational considerations also impact on the type and frequency of messenger service.

Within the division, messengers are used regularly between CPs, trains, higher headquarters, and subordinate elements. However, depending upon the nature of the material and the combat situation, special messenger service may be performed by IEW company team personnel or established by the supported battalion or brigade. MI and other units do not have sufficient assets to establish a regular messenger service. Specific instances when this may be required is the evacuation of captured enemy documents for immediate exploitation at higher headquarters. Messenger operations are described in FM 24-1.

Retransmission Stations

The division signal battalion provides radio retransmission stations within the division AOs to extend the range of FM radio communications. These retransmission stations overcome radio LOS and range constraints.

DIVISION IEW COMMUNICATIONS

Division Nets

The division VHF FM communications links to the subordinate elements are established through two division FM nets and one HF net—RATT: the command net, operations and intelligence (O&I) net, and general purpose RATT net. The division—

- ☐ Command net (FM) (see the following illustration) is used by the division commander and G3 for tactical information control, coordination, and reporting of tactical information. The MI battalion TOC monitors this net continuously to receive command taskings, direction, and information.
- ☐ O&I net (FM) provides the division

DIVISION COMMAND NET (FM)

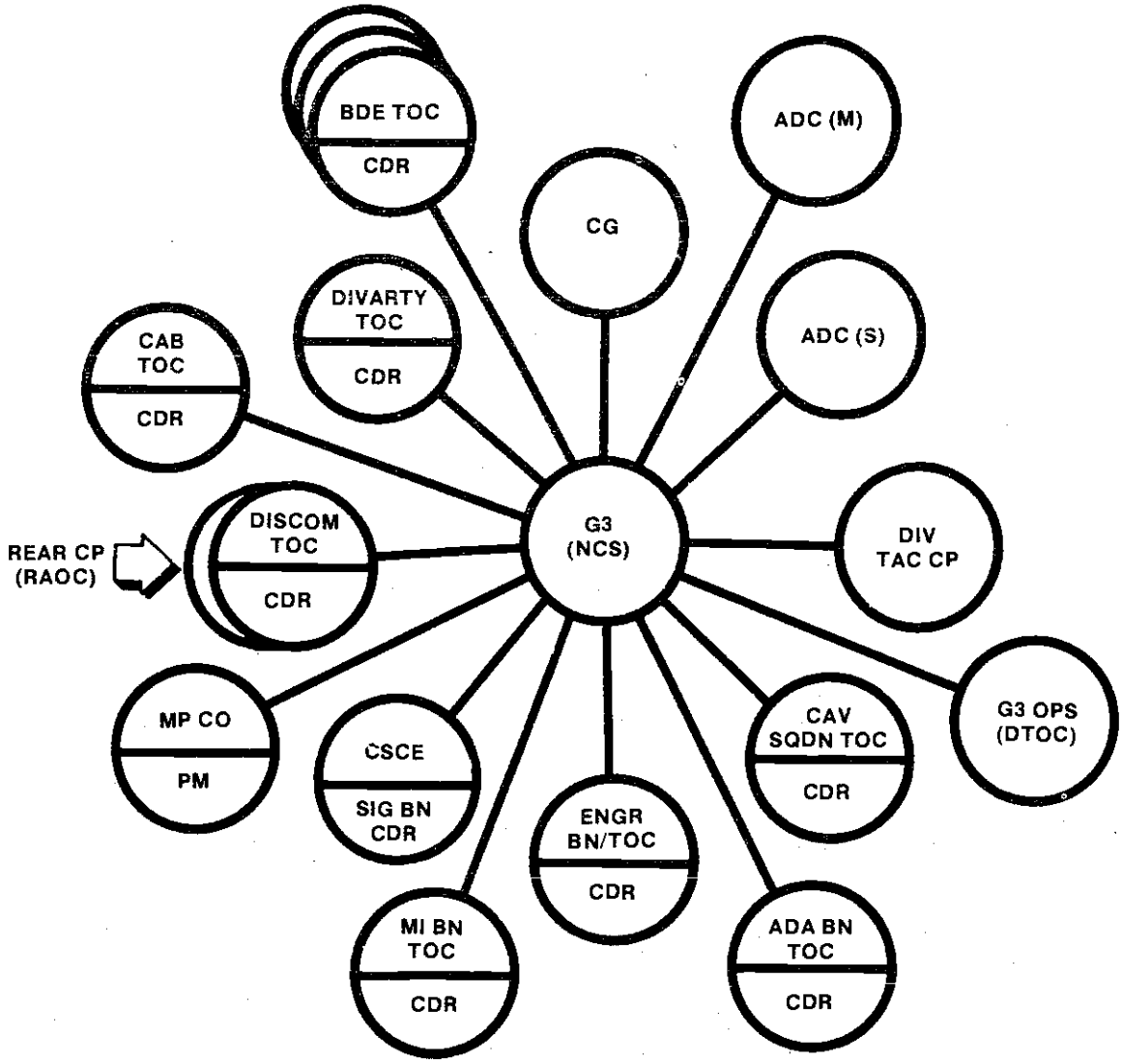

with a means of receiving and disseminating O&I information. The division G2 uses this net to receive information and intelligence developed by the brigades and to receive requirements and requests for additional IEW support. The MI battalion S2 is a subscriber on the division O&I net; he reports information to and receives intelligence from the division G2 and other stations on this network relative to the conduct of current intelligence operations. It is also used by the CM&D section to disseminate intelligence products and to receive reports of collected information from divisional elements. The MI battalion TOC uses this net to monitor reported information and to receive intelligence disseminated from the DTOC and tactical CP. The division O&I net is shown in the following illustration.

DIVISION O&I NET (FM)

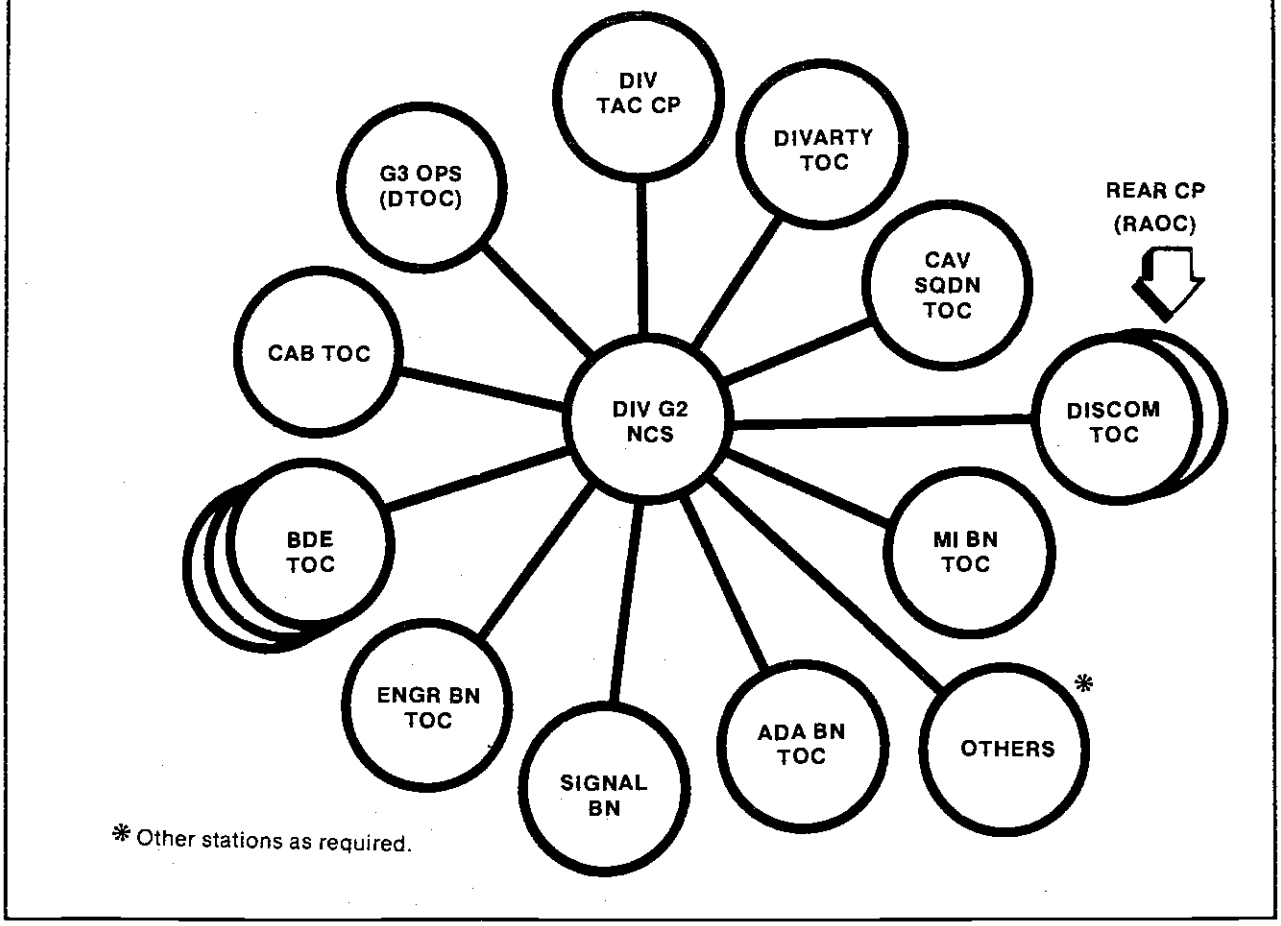

General purpose HF net (RATT) provides backup communications for the dissemination of intelligence and combat information within the division. The DTOC station, installed and operated by the division signal battalion, is used by the G2/CM&D section to disseminate intelligence and combat information to all subscriber stations. The MI battalion TOC station, also installed and operated by the division signal battalion, is used to monitor traffic on the net, report combat information and intelligence collected by MI assets, and transmit and receive administrative and logistical reports. This net is operated at the collateral SECRET level only.

Brigade Nets

The brigade intelligence net (FM) (see the following illustration) provides a combat information, intelligence, communications, coordination, tasking, and dissemination link from the brigade S2 to subordinate combat, combat support, and supporting MI elements. When GSR/remotely employed sensors (REMS) teams are retained under brigade control, they too may operate in the brigade net; however, the teams normally

BRIGADE INTELLIGENCE NET (FM)

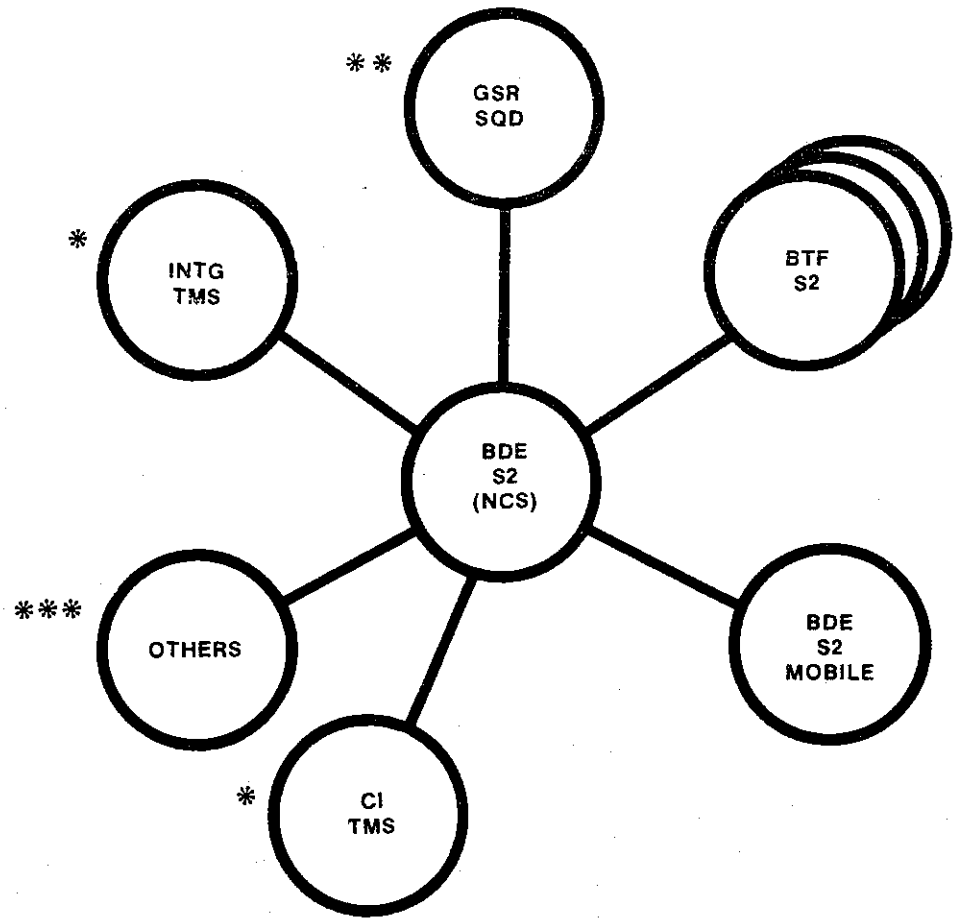

* When in DS to the brigade. ** When under brigade control. *** Other stations as required.

are tasked by the BTF S2s and operate in their subordinate unit nets. Reports generated by these GSR/REMS teams are transmitted directly to their controlling unit CP.

CM&D Net (FM)

The CM&D tasking and reporting net (see the following illustration) is the primary channel for passing mission tasking to the MI battalion TOC and for the reporting of analyzed SIGINT. This NET is established at the SCI level. All mission tasking is passed from CM&D to the MI battalion S3 section. The TCAE monitors the net and is prepared to execute SIGINT and EW missions on order from, and with guidance from, the S3. The TCAE uses this net to report its SIGINT product to CM&D at the SCI level when COMMCEN record traffic is not rapid enough.

Weather net (RATT)

The division is a subscriber in the corps weather net. The staff weather officer uses this RATT net to receive current data for weather forecasts. This data is incorporated into the IPB process. Equipment and operators for this HF RATT net are assigned to the division HHC.

Special Security Officer Net (RATT)

The division is also a subscriber in the corps SSO net. The MI brigade at corps provides the equipment and personnel for the operation of this net within the division which provides SCI RATT communications between the division SSO and corps as a backup to the normal SSO COMMCEN multichannel circuit.

Corps CM&D Net (RATT)

An SCI net connects the CM&D section at the DTOC with its counterpart at corps. This net is used to request assistance from corps for collection requirements that are beyond the range of division sensors and to receive intelligence summaries and other reports from corps. The equipment and operators for the operation of this net are provided by the MI brigade at corps.

MI BATTALION COMMUNICATIONS

There are three types of communications used in the MI battalion: multichannel, RATT, and radio (FM).

CM&D TASKING/REPORTING NET (FM)

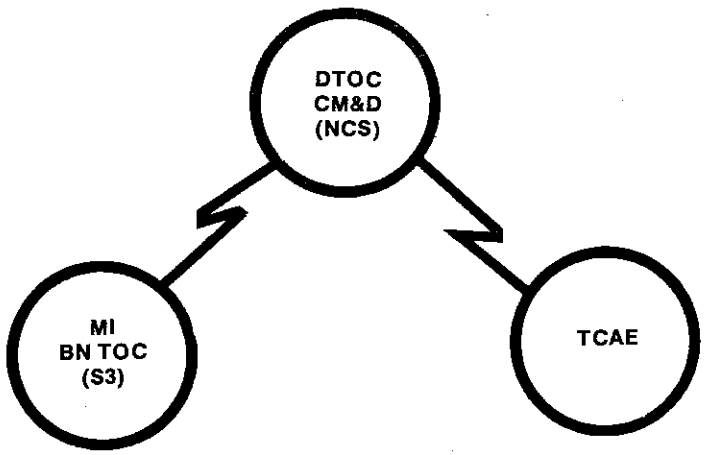

Multichannel

The division's MI battalion employs multichannel communications for C^2, coordination, and reporting purposes. In support of the C^2 function, multichannel-based voice, facsimile, and TCT traffic between the MI battalion TOC, IEWSE sections at brigade CPs, the G2 or G3, and DTOC allow for

oordination of mission tasking, clarifica-
.on of priorities for MI battalion opera-
.ons, and the tactical control and coordina-
ion needed by the MI battalion commander
nd S3 in planning for subsequent MI bat-
alion operations or the displacement of
EW company teams within the division
nd brigade AOs. It is, in a sense, an open,
eliable communications circuit allowing
ccess to any subscribing station for C^2 and
oordination purposes. The MI battalion
ses multichannel-based COMMCEN traf-
ic as the principal means of communica-
ions for the receipt of tasking from the
)TOC and reporting to the DTOC G2 the
esults of SIGINT collection. The
:OMMCEN (AN/TSC-58) at the MI battal-
ion TOC uses internal encryption systems to encipher the information provided in SIGINT reporting at the SCI level. Similar traffic is transmitted between the MI battalion TOC/TCAE and the corps MI brigade TOC/TCAE for technical coordination in support of SIGINT operations. Within the MI battalion TOC, multichannel circuits are used for voice and facsimile communications with necessary stations within the division. Multichannel access is extended to the MI battalion's logistical trains via routing through the battalion switchboard by wire. Once this routing capability is established, coordination of administrative and logistical information with division and brigade counterparts is provided for the MI

COMMAND OR OPERATIONS NET (FM)

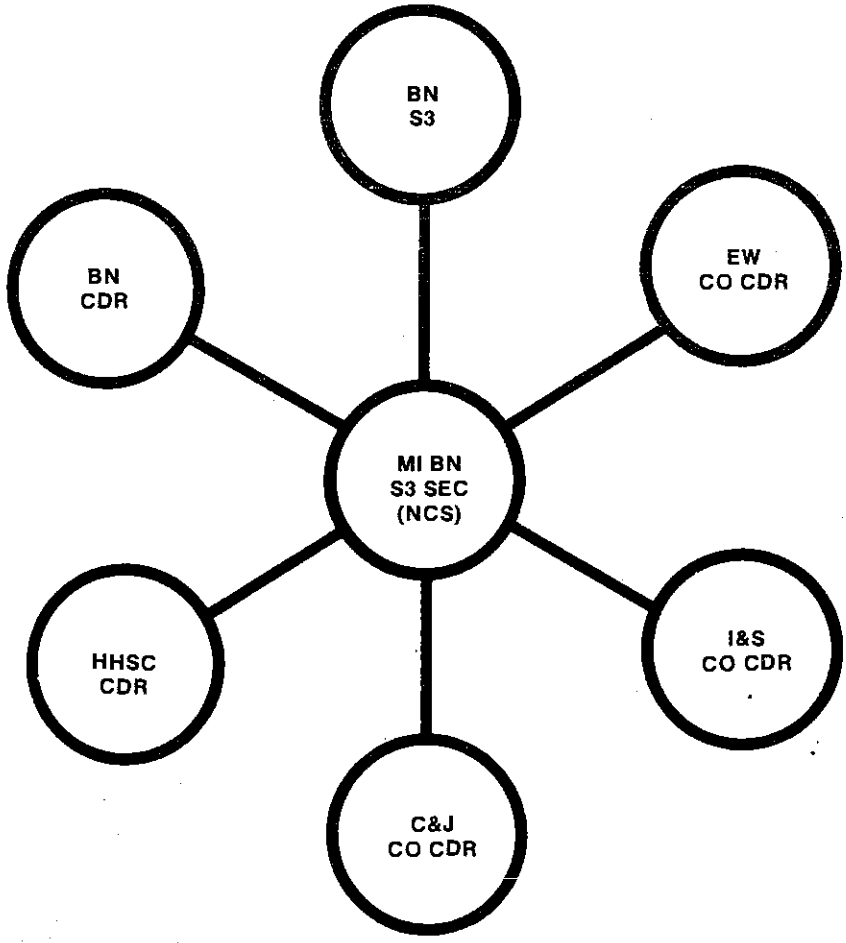

battalion's S1 and S4 sections.

RATT

In the MI battalion, RATT is used for record traffic communications to SIGINT and EW assets. These nets pass formatted tasking messages and reports of intercepted information. RATT systems of the MI battalion deploy to the battalion TOC and well forward with each of the three C&J and the SIGINT processing platoons. RATT nets established internal to the MI battalion operate on a full duplex basis.

Radio (FM)

FM voice communications are critical to C^2 within the MI battalion. They link the battalion TOC with IEW company teams and to the IEW assets on the battlefield. FM nets in the MI battalion also connect the IEWSE at the brigades to the MI battalion to ensure it receives the IEW requirements of the brigades in a timely manner.

Command or Operations Net (FM). The MI battalion command or operations net is used by the MI battalion commander for C^2 and coordination purposes. Stations found within this net are as shown of page 3-38.

Operations Net (FM). The MI battalion operations net (FM) (see the following illustration) is the principal operations net internal to the MI battalion used for asset tasking, coordination, and tactical control of deployed IEW elements.

MI BATTALION OPERATIONS NET (FM)

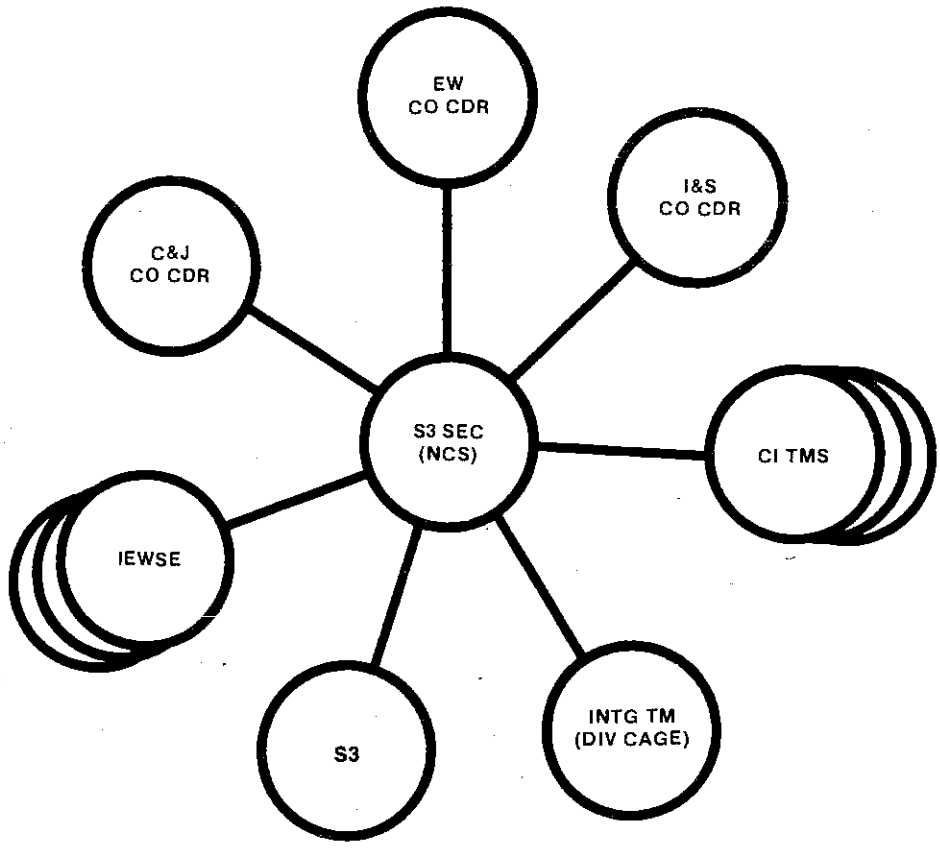

NOTE:

This net is used for asset tasking of IEW company teams and GS CI and interrogation teams. Reporting by CI and interrogation teams to the DTOC is accomplished using division common-user communications (for example, multichannel and general purpose RATT systems).

Iministative and Logistics Net. The I battalion administrative and logistics t (see the following illustration) is used to ordinate combat service support require- ents internal to the MI battalion. Its imary subscribers are the maintenance ams of the battalion's HHSC and service pport platoons or elements found in each the operating companies of the MI ttalion.

The service support platoons or elements of the MI battalion's operational companies will deploy with their parent company headquarters task reorganized as an IEW company team. Collocated with the company team headquarters section, the service support platoon or element provides the communications with the MI battalion trains for the company team commander.

ADMINISTRATIVE LOGISTICS NET

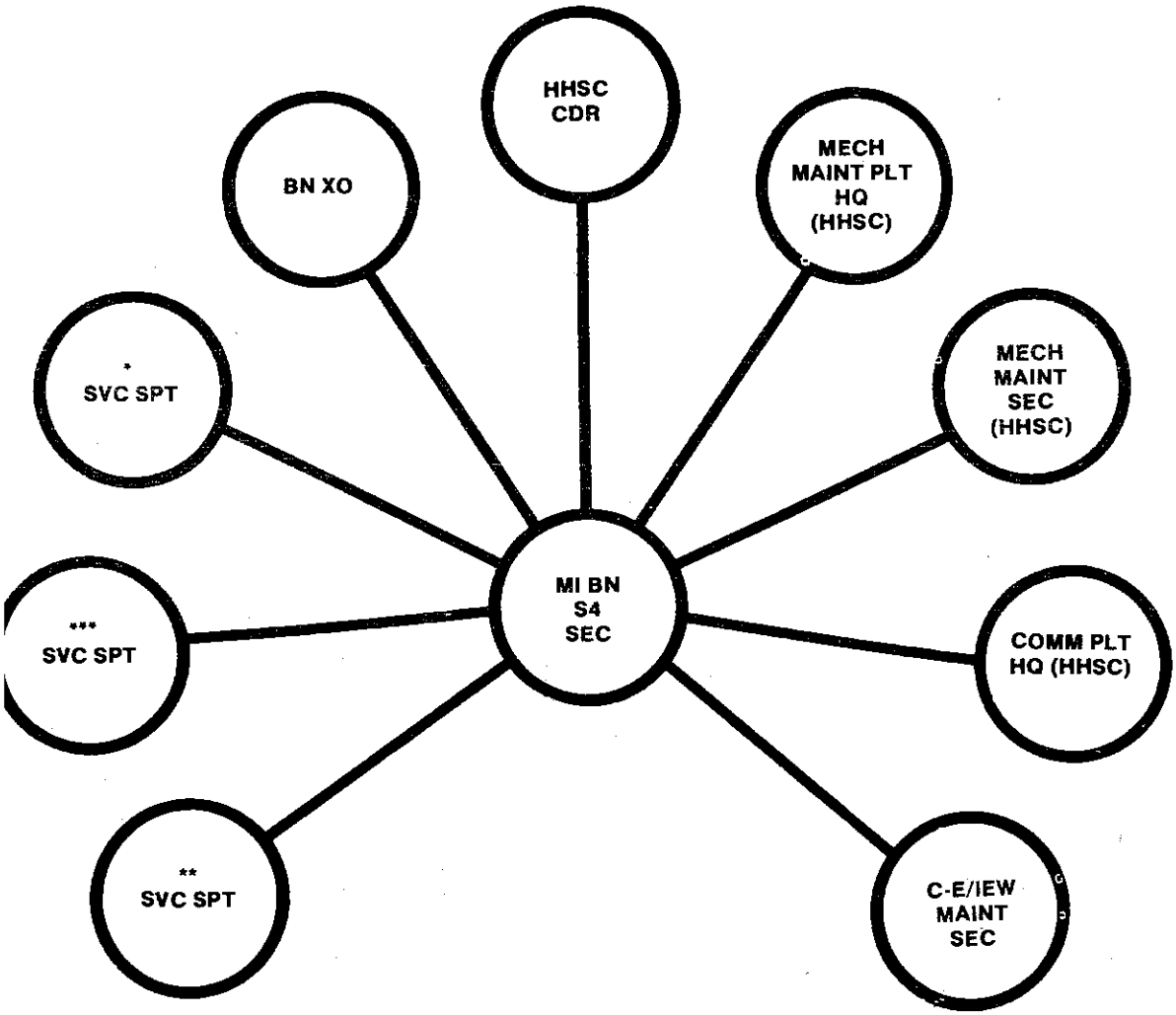

* assets attached to C&J Co

** assets attached to EW Co

*** assets attached to I&S Co

C&J Tasking and Reporting Nets (FM and RATT). The MI battalion C&J tasking and reporting nets 1, 2, and 3 (FM) (see the following illustration) are used for SIGINT and EW tasking and reporting and for passing technical data to the deployed C&J platoons. Due to the distances between stations, a retransmission capability may be required for effective FM communications. The IEWSE at the brigade CP monitors the C&J tasking and reporting net for elements in the brigade sector to provide rapid reporting of combat information and intelligence derived from SIGINT to the brigade S2.

In addition, C&J tasking and reporting nets (RATT) connect the TCAE to each C&J platoon for record traffic. Each C&J platoon terminates a TCAE net control station (NCS) HF RATT net. A separate full duplex net exists for each C&J platoon.

Upon receipt of missions from the TCAE via the FM or RATT tasking and reporting nets, the T&A team will task subordinate teams of the platoon via the C&J platoon's internal tasking and reporting net. Each of the three C&J platoons operates such a net (see illustration on page 3-42).

C&J TASKING/REPORTING NET (FM)

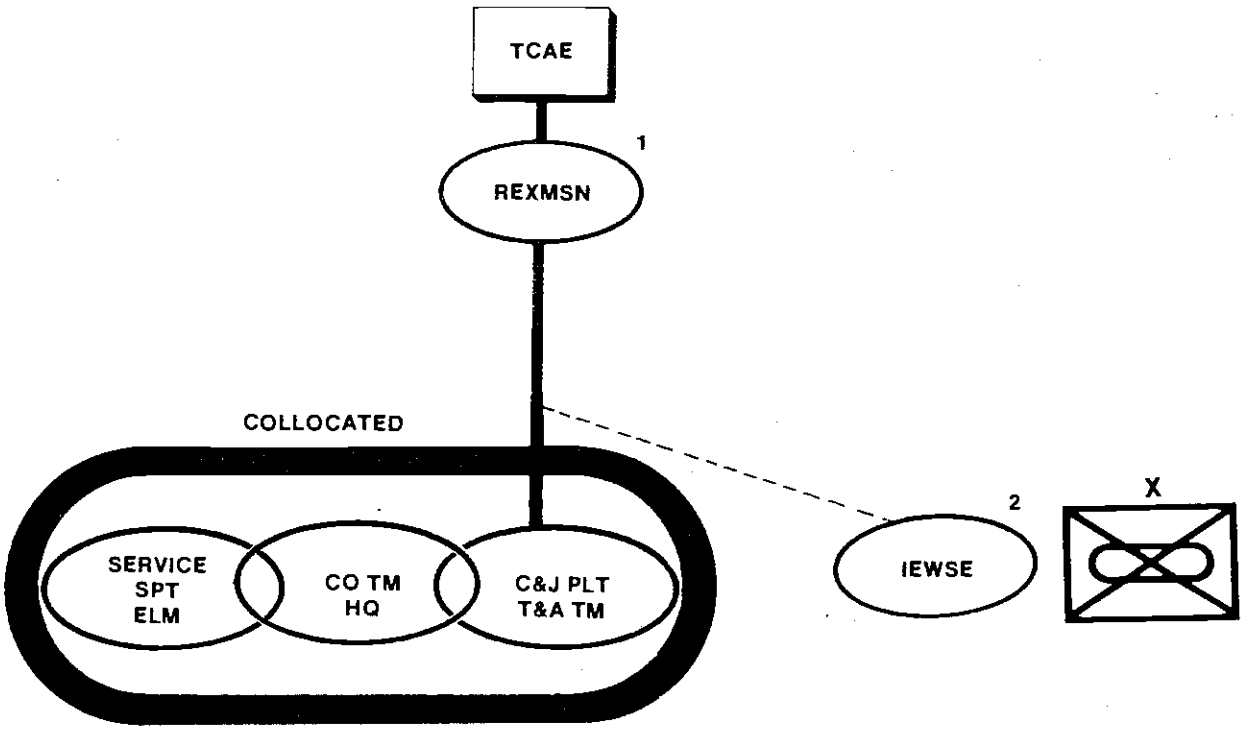

1. REXMSN deployed as required.
2. IEWSE monitors C&J tasking/reporting net with auxillary receiver of AN/VRC-47/89.

C&J PLATOON INTERNAL TASKING/REPORTING NET

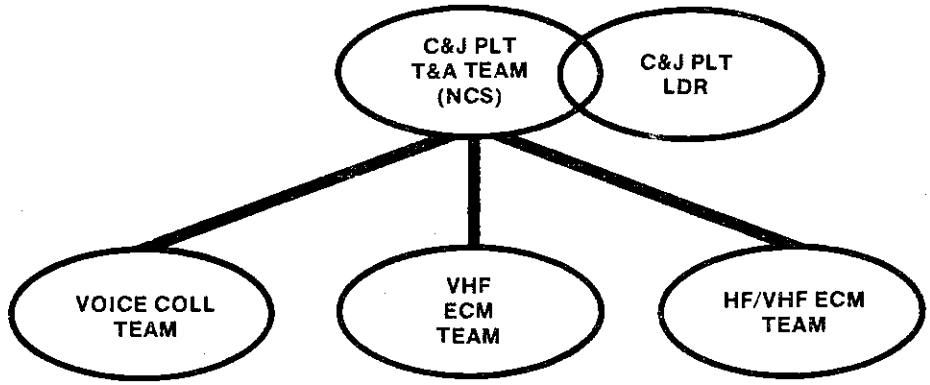

'GINT Tasking and Reporting Nets
'ATT and FM). SIGINT tasking and porting nets (RATT and FM) (see the following illustration) connect the TCAE to the SIGINT processing platoon analysis section for record traffic and operational

SIGINT TASKING AND REPORTING NET (FM)

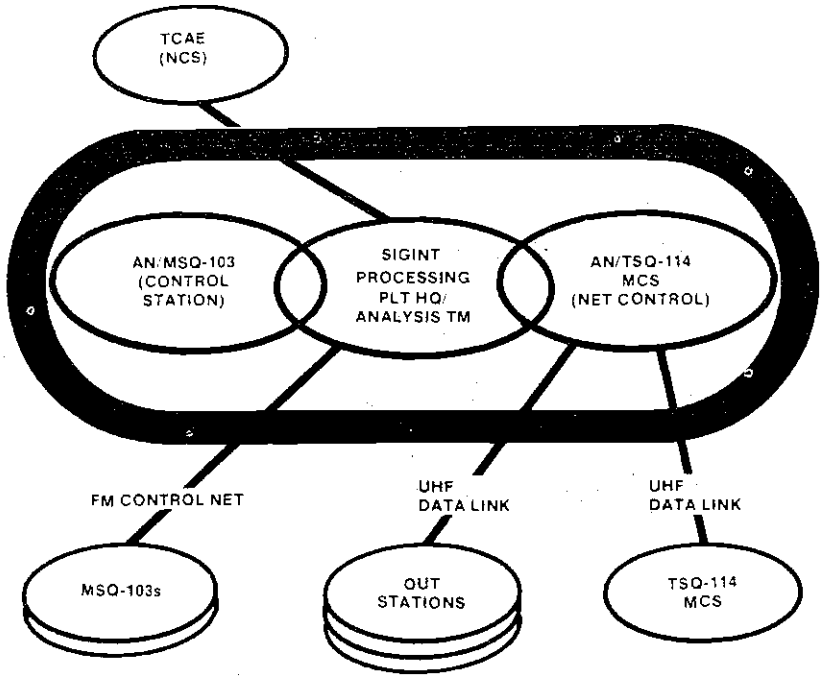

1. All elements shown at diagram center are collocated.
2. Secondary AN/TSQ-114 MCS is collocated with an adjacent C&J platoon HQ/CP for GRC-122 backup RATT communications with the TCAE when mission and terrain requirements permit. Secondary MCS assumes NCS role to control DF operations upon displacement of primary MCS or loss of GRC-122 RATT communications to primary MCS.
3. AN/MSQ-103 teampack outstations receive manual DF instructions from SIGINT processing platoon and analysis team on internal FM net.

taskings and reporting. The primary net, RATT, is wired to the primary MCS of the TRAILBLAZER system to permit automatic transmission of DF reports from the computer of the primary MCS to the TCAE. The FM net is used only when the HF RATT network is inoperable or when a backlog of operational traffic exists.

UHF data links connect the TRAILBLAZER MCS to the outstations. A data link will also connect the noncommunications intercept teams when upgraded equipment is fielded.

QUICKFIX Flight Platoon Tasking and Reporting Net. The flight platoon operations section is tasked by the TCAE for QUICKFIX missions. Mission tasking and technical data to support this tasking is provided to the platoon operations center over the QUICKFIX flight platoon tasking and reporting net (see following illustration) prior to mission execution to allow maximum operational time by SIGINT and EW operations while aloft. SIGINT and EW operators within the QUICKFIX aircraft provide immediate tactical reporting to only those priority collection tasks stated in the tasking message using on-board UHF and VHF communications systems netted with the TCAE. For data collected of a general information and intelligence nature, reports are normally provided at the conclusion of the QUICKFIX mission to allow maximum time for collection operations. As a general rule, when QUICKFIX SIGINT and EW operators are communicating reports while aloft they must cease collection operations.

Retransmission Stations. Communication between deployed teams, platoon headquarters, company team headquarters, brigade IEWSE, and the MI battalion TOC are vital to maintain continuous support to the division and brigades. Because of the distance and terrain features between elements, retransmission of communications may be necessary. Three VHF FM retransmission stations are provided within the MI

QUICKFIX FLIGHT PLATOON TASKING AND REPORTING NET

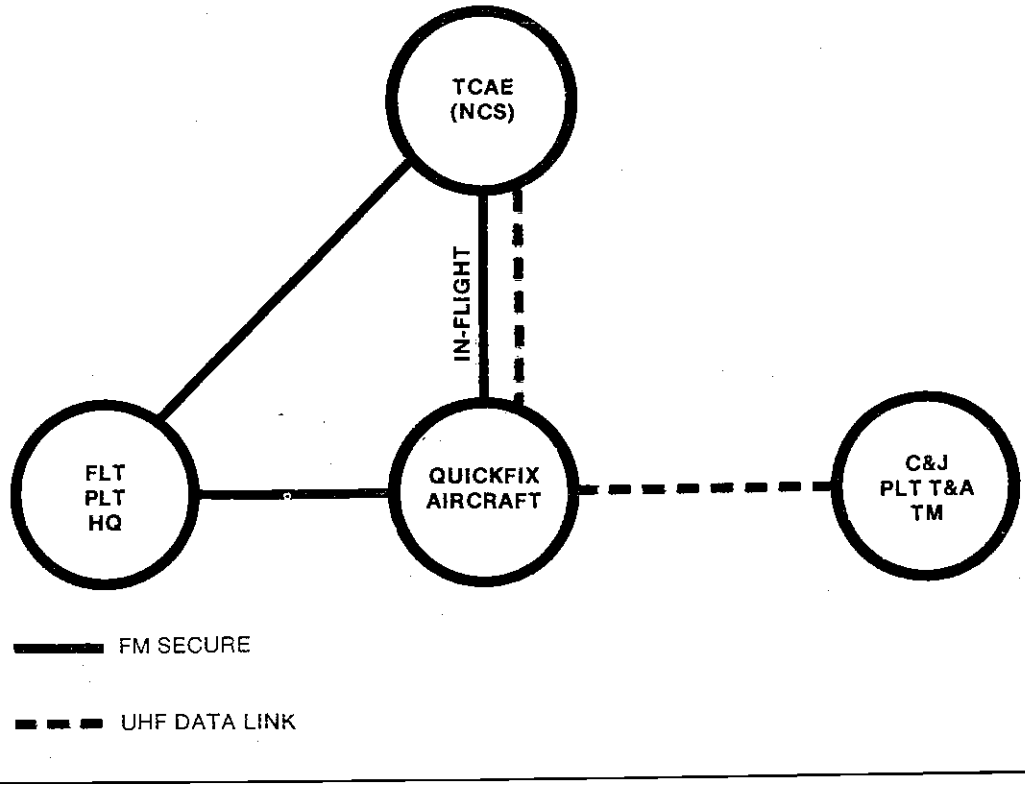

ttalion so that battalion elements can mmunicate at extended ranges or avoid rain obstructions. The battalion com-ander must decide where this capability ll best serve the needs of the battalion.

Wire

The MI battalion uses wire to communi-te between elements internal to the CAE, between elements located at the bat-ion TOC, and between the battalion TOC d trains. The battalion wire system also erfaces with the division's multichannel stem providing access to other units thin the division multichannel system. ie MI battalion's main switchboard is cated at the MI battalion TOC. The COMMCEN, AN/MSC-31, is positioned and manned by the MI battalion's communications platoon to serve as the battalion's main integrating COMMCEN. It provides access from the internal SB22 switchboard to the division main switchboard through the division multichannel system by way of its interface with the AN/TRC-145 (V) radio terminal. The wire system in the following diagram depicts the wire lines laid to and from the battalion's main switchboard connecting sections and elements of the battalion. The headquarters section of the HHSC provides an SB22 switchboard for use at the battalion trains locations. This switchboard, positioned within the trains operations center established by the S4 and XO, is connected by wire or cable to the MI bat-

MI BN (CEWI) WIRE SYSTEM DIAGRAM

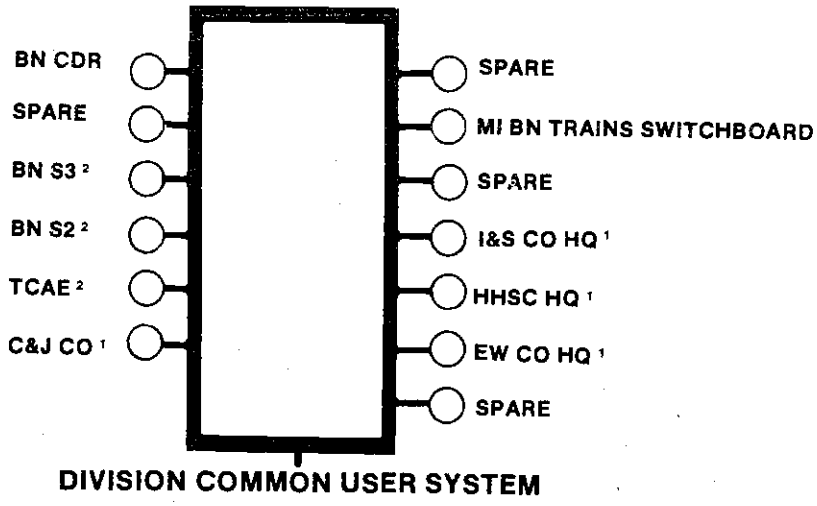

1. Unless deployed
2. Located at the battalion TOC

talion main switchboard at the TOC or to the nearest unit switchboard. It provides access to the division multichannel system to permit communications between the battalion trains and other CSS organizations and staff within the division. The TCAE employs an SB22 switchboard for telephone communications internal to the TCAE.

Corps SIGINT and EW Net (RATT)

The TCAE at the MI battalion TOC is a subscriber in the corps SIGINT and EW net. This SCI net allows for the exchange of technical data between the division TCAE, corps TCAE, and the TCAEs of adjacent divisions. The MI brigade provides the equipment and operators for this net.

COMMAND AND CONTROL DIFFERENCES IN THE LIGHT, AIRBORNE, AND AIR ASSAULT DIVISIONS

Command and control of IEW elements in the light, airborne, and air assault divisions is similar to that described in the heavy division, with the same facilities, CPs, and staff responsibilities. The different employment of these divisions and their reliance on corps and its MI brigade for IEW support to overcome a lack of some IEW capabilities will, however, often create significantly different C^2 needs and communication requirements.

In a LIC, these divisions may operate with the brigades fighting three separate battles in different locations. IEW company teams may be required to operate in DS of these brigades instead of GS to the division. If distances between brigades were great, the IEW company teams would need to operate independently without technical data and control from the MI battalion TOC. Under such situations, the role of the MI battalion TOC would alter, and if necessary, its TCAE would augment the T&A teams in each C&J or voice collection platoon for technical control of SIGINT and EW assets.

The airborne and air assault divisions may be employed with one brigade securing landing or drop zones for later insertion of the other brigades. In such cases, an augmented DS IEW company team would deploy with the first brigade, with special provisions for support by all available division IEW elements (that is, QUICKFIX) and corps IEW assets such as side-looking airborne radar (SLAR), GUARDRAIL, and QUICKLOOK. Most of the corps IEW effort may be dedicated to a single maneuver brigade, with one IEW company team being the focal point for the coordination of this support. As the battle progresses and more maneuver and IEW elements are deployed to the battle area, periodic realignment of the standard tactical missions initially assigned to IEW assets and the communications supporting these assets may be required. The MI battalion commander and S3 must constantly monitor the status of assets, division operations, and IEW requirements and shift assets and adjust asset tasking to best meet the division's needs.

If the division consolidates into a single, sustained operation in a LIC environment or builds to a full division force in an airborne or air assault operation, the employment of, and C^2 procedures for, IEW elements will become more closely aligned with standard deployment concepts associated with the heavy division.

The light division lacks a ground-based jamming capability, but has a much greater HUMINT capability than the heavy division. A type IEW company team in a light division which may be placed in DS of a brigade could be organized as shown in the following illustration.

IEW company teams in the airborne and air assault divisions are similar to those in the heavy division, lacking only heavy ground-based jammers. In sustained ground operations, all of these divisions rely on augmentation from the corps MI brigade for ELINT, DF, and ECM support. IEW assets from the TEB of the MI brigade may be attached as part of the IEW company team.

IEW COMPANY TEAM (LIGHT DIVISION)

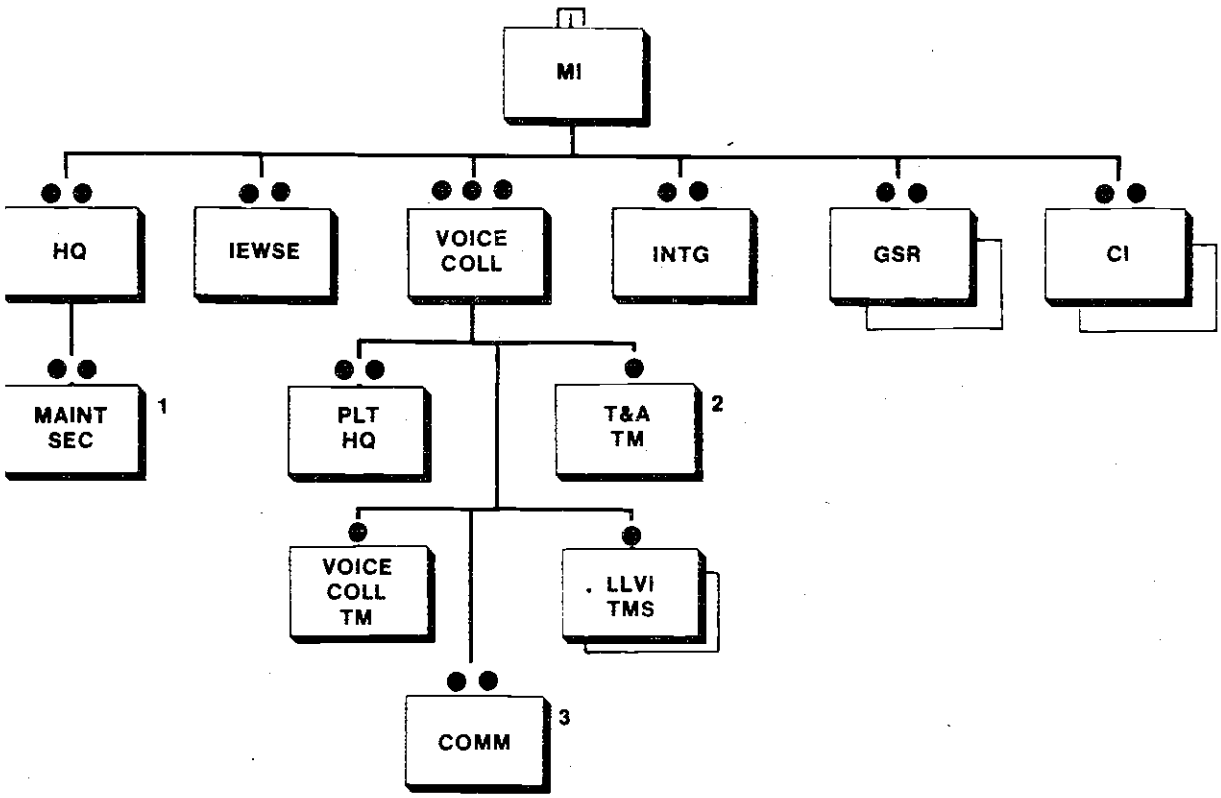

NOTE:

1. Task organized maintenance team from HHSC. Includes special maintenance augmentation to maintain unique attached equipment.
2. May include augmentees from TCAE if operating separately.
3. May include additional special comm when required (ARC-164, GUARDRAIL CTT, and so forth).

CHAPTER 4

Preparation for Combat

Division IEW operations are dynamic. They change as the battle progresses. The division commander, through his requirements, places demands on the system to start the IEW process. He uses the products of the system to plan and direct all phases of the air-land battle. He provides guidance to the staff to support his concept of the operation for the employment of the IEW system and to ensure it is integrated with division combined arms operations. Together, the division commander and the IEW staff accomplish the estimating, decision making, planning, and ordering process which puts the system in motion, focusing on critical requirements and keeping it aligned with priorities.

This chapter describes how the IEW system operates and how IEW operations are planned, directed, and coordinated.

INTELLIGENCE AND ELECTRONIC WARFARE PLANNING

The division commander initiates IEW planning when he receives a mission from the corps or he assumes a mission on his own initiative. The G2 might recommend an operation to exploit a tactical opportunity detected through intelligence. Initially the commander and staff exchange available information that will affect the accomplishment of the mission.

The G2 provides information and intelligence about the current enemy situation and the AO. The G2 and G3 provide information about the current status and capabilities of divisional units, including the MI battalion.

The commander analyzes the mission to identify assigned and implied tasks, the corps commander's concept of the operation, and the constraints that the corps commander has placed on the operation. Constraints might include such things as time, radio silence, and in some cases, the use of ECM. Based on this analysis, the commander restates the division mission—clearly and concisely—clarifying the overall purpose of the operation and the specific tasks to be accomplished. The restated mission becomes the basis for estimates, plans, and orders.

The commander provides initial planning guidance to the staff with the restated mission. Using this planning guidance the staff prepares or revises their estimates. It provides a common start point for staff planning. The commander continues to provide planning guidance throughout an operation. The nature and frequency of planning guidance will vary with the mission, situation, planning time available, and length of time the commander and staff have worked together. Planning guidance will often include—

- ☐ Specific courses of action to consider.
- ☐ Critical information and intelligence requirements.
- ☐ Special IPB considerations.
- ☐ ECM targets and objectives.
- ☐ OPSEC considerations.
- ☐ Deception opportunities.

When time permits, the division staff usually develops formal estimates for each operation. These estimates are dynamic; the staff continuously changes them during the

ıeration in accordance with the factors of ETT-T. Staff estimates are the basis for e division commander's personal estimate the situation and tactical decision. When e division commander has decided on a urse of action, he announces his decision ıd concept of the operation to the division aff. He may include subordinate and supporting commanders. At this point, the staff anges the focus of its planning to support e commander's concept of the operation.

The commander announces his concept of e operation in sufficient detail so that the aff can develop plans and orders. The mmander clearly articulates his intent, to clude special intelligence requirements, e use of ECM, OPSEC priorities, and ception measures. The mission comander's concept and guidance are the sis for managing IEW operations.

NTELLIGENCE STAFF PLANNING

Intelligence enables the division and subdinate commanders to see and underand the battlefield in order to employ division combat forces and weapon systems effectively. It is a primary basis for estimates and tactical decisions. It supports all battlefield functions within the division.

Initially, the G2 focuses intelligence operations on developing the information and intelligence needed to support command and staff estimates. During this phase, he must generate accurate intelligence to support the formulation of the division commander's restated mission and concept of the operation. After the commander has announced his decision and concept of the operation, the intelligence effort is focused on supporting the division scheme of fire and maneuver for accomplishing the mission.

Division intelligence operations follow the intelligence cycle. The intelligence cycle is a logical sequence of actions consisting of four phases. All phases of the cycle focus on the division mission and concept of the operation. The intelligence cycle is a continuous process. Even though each phase is conducted in sequence, all are conducted concurrently (see the following illustration).

THE INTELLIGENCE CYCLE

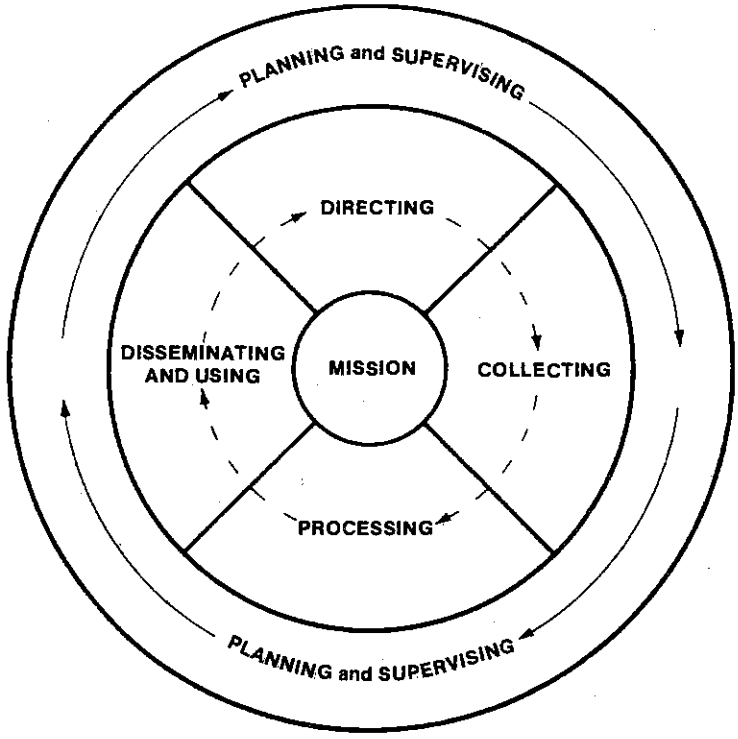

rve as a general guide for corps collection erations supporting the division. This ea is of concern to the commander and cludes the AO, adjacent areas, and areas tending into enemy territory. Division anning guidelines extend up to 72 hours yond the FLOT or attack objectives.

IPB serves as a basis for assigning the nits of the brigade AO. Based on an aluation of METT-T, the G2 recommends e limits of the brigade AO to the G3, who turn evaluates the G2's recommendations id submits the boundaries to the commander for approval. The definition of the igade AO serves as a basis for allocating sources and support to the brigades.

Terrain Analysis

Terrain analysis is a process of analyzing tural and man-made terrain features pable of aiding or inhibiting combat by endly or enemy forces. The output of this alysis determines where forces can move, oot, and communicate.

The division commander focuses on emy divisional and regimental avenues approach, both cross country and along OC. Supporting the division is a terrain am that collects, processes, and disseminates terrain intelligence.

The terrain team develops numerous terin overlays and studies for the division. ese include obstacles, cross-country ovement, percent of slope, vegetation, soil, d LOS overlays.

Terrain analysis procedures and methodgy allow the ASPS to project force ovements within the battlefield area and, conjunction with doctrinal data, in time.

Weather Analysis

Inseparable from terrain analysis is weather. Weather affects trafficability, weapons, and sensor systems. During planning, the SWO and his weather team provide studies based upon historical climatic data concerning the battlefield area. Upon commitment of division forces to an operation, these studies provide weather forecasts. Weather affects overlays and products multiply the value of raw weather data by applying them directly to all combat and support operations.

During operations, the commander must ensure that dedicated weather communications are not interrupted so that current field observations are available continuously, and the latest forecast can be used to support division operations.

The division has no all-weather weapon system. The effects of atmospheric conditions on the integrated battlefield require more than just the traditional thinking about the role of weather in combat. The division commander needs specific information about the effects of weather so as to tailor a scheme of maneuver to exploit these effects.

Threat Evaluation

Threat evaluation focuses on the specific forces that can effect the accomplishment of the division mission. In terms of combat maneuver forces, the division focuses on one echelon above and two below its own echelon. This translates into enemy armies, divisions, regiments, and battalions. A systematic approach requires developing a threat data base, evaluating threat capabilities, and developing doctrinal templates.

The ASPS builds the threat data base using the nine OB factors as a start point (see FM 34-3). The threat data base reflects current intelligence concerning enemy formations, leadership, and doctrine, using both open and classified sources.

Additionally, the division commander is interested in battlefield functional systems. These include tactical rockets and artillery with priority to NBC delivery systems; air defense systems; C^2 facilities and installations; C^2 communications; and REC systems.

After the threat data base has been developed, the ASPS evaluates enemy capabilities. Primarily, is the enemy capable and does he have the available resources to execute specific types of operations that can affect the accomplishment of the division mission. For example, analysis indicates that a river crossing must be conducted in the friendly AO. The threat force must have the proper engineering assets available. If not, a significant capability does not exist. The threat data base and capabilities form the foundation for doctrinal templates.

Doctrinal templates are illustations of enemy force structures, deployments, and capabilities drawn to scale without considering the battlefield constraints of weather and terrain. This is doctrinally how the threat forces want to fight.

A standard set of doctrinal templates (GTA 30-1-24) useful to the division IPB effort is available from the training aids support centers. The ASPS may use these templates as they are or modify them to conform to the specific enemy forces that will operate in a specific battlefield area.

Threat Integration

The nucleus of the IPB process, threat integration, integrates all the previously evaluated data into products useful to the division commander and staff. Threat integration is accomplished through the integrated efforts of the G2, G3, FSE, and others as needed. Supported by situation, event, and decision support templates, the division commander can allocate scarce resources to decisively defeat the threat.

Situation templates are hypotheses of how threat forces might deploy based upon enemy doctrine and influenced by the terrain and weather. They provide a basis for selecting critical areas on the battlefield and for identifying, locating, and tracking HPTs during an operation. With these, indicators of activity can be identified. Intelligence collection, directed against indicators or potential indicators, is accomplished through the use of named areas of interest (NAI). Depicted on the event template, NAI are areas or points located along a mobility corridor (an area of ingress) where activity or lack of activity will help confirm or deny a particular enemy course of action.

The event analysis matrix is used in conjunction with the event template, and based on enemy doctrinal rates of movement and each enemy course of action postulated, estimated times can be calculated for threat movement. Both focus on the collection effort. The ultimate objective of threat integration is for the division commander to identify opportunities to use the weather and terrain to exploit enemy vulnerabilities to defeat the threat. The decision support template (DST) is developed specifically to aid the commander in making decisions. They do not dictate decisions, but provide a guide as to when decisions must be made to execute the decision in time to gain the desired effects.

Through staff coordination, target areas of interest (TAI), decision point clusters, and time phase lines are graphically portrayed on the DST. Also referred to as the intelligence estimate in graphic format, the DST provides the division commander viable options for using critical assets at the right time and right place to maximize tactical benefits. Through systematic and continuous IPB, the division commander can influence the battle by conducting operations based on planned events to cause the enemy force commander to react to friendly initiatives rather than the reverse.

INTELLIGENCE AND ELECTRONIC WARFARE MANAGEMENT

COLLECTION

Division collection operations must satisfy the intelligence and combat information needs of the division and subordinate unit commanders, staffs, and operational elements. The division commander's PIR drive the collection effort; the G2 directs it; and the CM&D section manages it.

The division commander initiates collection operations based upon his uncertainties concerning weather, enemy, and terrain, which are identified through IPB. The commander may ask questions (PIR), or the

32 may recommend PIR. The commander's PIR are always the top priority for collection.

The G2 directs intelligence collection operations in response to the division commander's PIR. The CM&D section carries out collection management. Collection managment ensures effective use of a limited number of collectors against a tremendous number of movers, shooters, sitters, and emitters. Collection management operations are subdivided into three functional levels of management: requirements, mission, and asset management. The G2 and CM&D section perform requirements and mission management. Subordinate and supporting unit (collection agency) commanders, including the MI battalion and company commanders, perform asset management. The MI battalion TCAE accomplishes the technical aspects of asset management for SIGINT and EW assets.

Requirements Management

Requirements management translates the division commander's PIR and IR from the G2 and higher, lower, and adjacent commands into specific information requirements (SIR).

When the collection manager (CM&D section) receives a requirement or request, he logs it in and assigns a suspense date based on when the information is needed and the latest time it will be of value. He ensures that the request includes all the information that is needed. Using the request for information (RI) format (see Appendix A) which eliminates gaps in the data required, he queries the requester for any missing data.

The collection manager consolidates existing and new requirements to reduce the overall number of requirements. While the division commander's PIR are the top priorities, the collection manager bases the priority of other information requested on the priority assigned by the requester. The collection manager continuously assesses priorities throughout the operation to ensure that they reflect the commander's needs relative to METT-T.

Once the collection manager has logged, validated, consolidated, and prioritized PIR/IR, he translates these requirements into SIR. An SIR is the basic question that needs to be answered to confirm or deny the existence of an indicator or to be used in satisfying a PIR or IR. The ASPS identifies indicators that support each PIR/IR and translates them into SIR. The ASPS uses IPB products, specifically event templates and event analysis matrices, to specify where to look, when to look, and what to look for; these three questions must be answered before an SIR is collectible.

Before assigning a collection mission to a collection agency, the CM&D queries the ASPS, the corps CM&D section, or adjacent command CM&D sections for an answer to the SIR. An SIR that can be satisfied from existing data bases generates a more timely reply to the requester and requires no new collection mission.

When the collection manager is satisfied that SIR cannot be answered from existing data bases, reporting requirements are then determined. Collection results are normally reported to the CM&D, but combat information in addition to being reported to the CM&D, will be reported directly to using units throughout the division.

To manage collection requirements, the division collection manager uses a collection plan. The collection plan is a working document used to direct and coordinate the collection effort. The collection manager may select the format himself, or the G2 may specify one. The collection plan is a dynamic document that is continuously updated in response to new requirements and situations. The format used must facilitate these changes. The collection worksheet (see the following example) is one format which may be used for a collection plan.

As SIR are answered, they are deleted from the collection plan. New PIR, IR, and resultant SIR are added to the collection plan as new uncertainties, intelligence gaps, or operations dictate.

COLLECTION WORKSHEET FORMAT

PRIORITY INTELLIGENCE REQUIREMENTS AND INFORMATION REQUIREMENTS	INDICATORS	SPECIFIC INFORMATION REQUIREMENTS	COLLECTION AGENCIES	PLACE AND TIME TO REPORT	REMARKS
			1st Bde / 2d Bde / 3d Bde / LRSD / CAB / MI Bn (CEWI) / ADA Bn / DIVARTY / Engr Bn / AC Sqdn / MP Co / DISCOM / Corps / Adj Div		
INSTRUCTIONS					
LIST PIR/IR. LEAVE SUFFICIENT SPACE TO LIST INDICATORS FOR EACH PIR/IR IN COLUMN 2.	LIST INDICATORS THAT WILL SATISFY EACH PIR.	LIST SPECIFIC INFORMATION REQUIRED TO SATISFY THE INDICATOR. KEY REQUIREMENTS TO NAI ON THE EVENT TEMPLATE IF POSSIBLE. THESE REQUIREMENTS FORM THE BASIS FOR SPECIFIC ORDERS AND REQUESTS.	PLACE AN X UNDER EACH AGENCY THAT CAN COLLECT THE REQUIRED INFORMATION CIRCLE THE X WHEN AN AGENCY HAS BEEN SELECTED AND TASKED.	PLACE MAY BE A HEADQUARTERS OR UNIT. TIME MAY BE SPECIFIC, PERIODIC, OR AS OBTAINED.	INCLUDE MEANS OF REPORTING (VIA SPOT REPORT FORMAT); ESTABLISHED COMMUNICATIONS (MULTICHANNEL, FM, RATT); OR STATE "BY SOP" IF SOP CRITERIA APPLIES FOR RESPONDING TO COLLECTION REQUIREMENTS.
EXAMPLE					
1. Will the enemy attack? If so, when, where, and in what strength? 2. ---	Massing of mech elements, artillery, and logistical support.	Enemy movement between ridge vic 5047-5042 to Seine River. Rept size and type unit, direction of movement, and termination pt. Special attention to NAI 3, 5, & 8.		OTOC G2	Initial report via spot report on FM (O&I) or multichannel.

Mission Management

The collection manager identifies and valuates collectors to satisfy SIR and tasks r requests collection agencies with the colection mission. As such, the collection anager must know the availability, capailities, and limitations of collectors. Collector availability is determined by using quipment status reports from the MI batalion and other division collection agenies. The DOD sensor capabilities handook, or in the case of national systems, the oint-Tactical Exploitation of National Sysems (J-TENS) Manual gives the baseline apabilities and limitations of collectors. By xperience, the collection manager also ains knowledge of the capabilities and limations of collectors in organic, higher, and djacent collection agencies.

Once the availability of collectors has een assured, the asset evaluation workheet is prepared for each SIR. FM 34-1 decribes the asset evaluation worksheet. Jsing the worksheet, the collection manger correlates the SIR to a list of available ollectors from subordinate, higher, and djacent commands. The SIR is evaluated gainst capabilities and environmental facors on each collector. As a result of this valuation process, collectors are identified s capable, marginally capable, or incapale of collecting the SIR.

The collection manager then identifies ıe collection agencies to which capable or ıarginally capable collectors belong. When ossible, the collection manager tasks subrdinate collection agencies first. Should ıbordinate agencies be incapable of colcting the SIR, the collection manager equests collection from higher or adjacent ommands. Capable or marginally capable gencies are indicated on the collection lan with an X at the intersection of the colction agency and respective SIR. The gencies which have been tasked or equested to provide information are indiıted by circling the X.

The collection manager consolidates colction missions when possible. A collection ission may satisfy several SIR. He also ısures that more than one collection gency or collector is committed to the most itical SIR for purposes of redundancy and confirmation. For example, he might request IMINT from corps to find the free rocket over ground (FROG) battery as a mover or sitter and COMINT from corps to detect and identify the battery through its communications. This programed redundancy or duplication is used to ensure successful collection and to verify critical intelligence information from independent collection resources. Balance is also used to avoid overtaxing the capabilities of individual resources.

Asset Management

Unit commanders select and direct (task) organic collection assets to fulfill mission tasking received from the division CM&D section. This is accomplished by knowing asset availability, proximity to the threat or availability to collect based on positioning, and the careful prioritization of existing tasks assigned suitable assets. Just as mission management indicates that the unit or activity is capable of collection, asset management indicates the systems or assets capable of collection. For example, in response to a tasking from CM&D for the location of an enemy division main CP, the MI battalion TOC directs the AN/TRQ-32 intercept and TRAILBLAZER teams to execute COMINT missions to verify that a division CP exists and DF to determine its location. In response to this mission tasking, the MI battalion may also task ELINT collection teams to verify COMINT reports of this CP by locating associated air defense radars which habitually protect such critical CPs.

INTELLIGENCE PROCESSING

The ASPS processes information from all sources to produce intelligence in response to the division and subordinate commanders' needs. The TCAE processes information gained from signal intercept to produce SIGINT. It forwards the SIGINT it develops to the ASPS for correlation with other information and intelligence to produce all-source intelligence.

Intelligence developed through processing satisfies the division's PIR, IR, and target development requirements. While processing satisfies the division requirements, it

may identify other requirements. As additional requirements are identified or generated through processing, the ASPS passes them to the CM&D section for collection.

The ASPS maintains the intelligence data base, except the SIGINT and EOB data bases which are maintained by the TCAE. The ASPS arranges and catalogs information and intelligence so it will be easy to retrieve and use for correlation and analysis. The G2 and chief, ASPS, jointly determine what data base files will be maintained. They may vary between divisions with the availability of resources, nature of operations, and personal desires. The following illustration shows data base files that the ASPS section will usually maintain.

ing order, mission, or contingency mission. The IPB data base is the primary basis for intelligence analysis within the division. Situation and event templates provide the ASPS with patterns for comparing actual battlefield activities to predict the enemy's intentions and identify and locate HVTs. The ASPS interfaces with the CM&D section when collection requirements are satisfied or no longer needed and when new collection requirements are established.

The ASPS plays a key role in the fire support targeting effort. Planning fire support targeting operations requires the coordinated effort of the G2, G3, and FSE. The ASPS advises the G2 and provides TVA and target correlation support to target development. The FAIO, who operates in

DATA BASE FILES

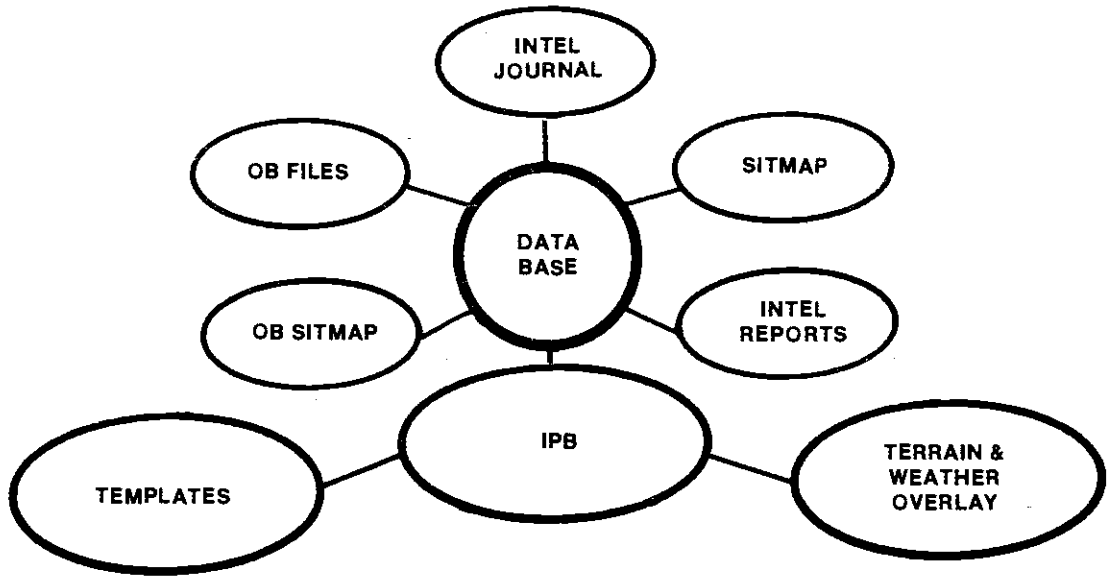

The ASPS analyzes and correlates collected information from all sources to satisfy the division PIR and other intelligence requirements. The primary analysis tasks are to determine the intentions of enemy armies, divisions, and regiments opposing the division; and identify, track, and develop required targeting data concerning enemy HVT and designated HPT.

The ASPS accomplishes IPB as early as possible after the division receives a warn-

the ASPS, is the key link between the ASPS and FSE.

Targeting is a staff function accomplished primarily by the G3/S3, G2/S2, and the FSE. The three primary players in the targeting process are referred to as the targeting "triad." Other agencies that will have major input to the process include USAF representatives, engineer, airspace management element, and chemical liaison officers. Targeting is a continuous process which includes five phases or functions:

:us, sensor tasking, information process-
g, attack, and assessment. These func-
nal activities are based upon a distribu-
'e data base where each staff agency
llects and stores the data applicable to its
'n area, but has access to the information
ored by any other agency. The proper
nduct of the targeting process is depen-
nt upon such a sharing of information.

Target development is closely linked with
e situation development process described
rlier in this chapter. The targeting pro-
ss is discussed in detail in FC 6-34-10/FC
·118. During preparation for combat, the
B process assists the target development
ort especially when TVA is used with it.
ie result should be the timely nomination
the enemy HVTs which provide the basis
· selecting HPTs.

During the threat evaluation phase, the
' staff identifies the HVTs corresponding
the battlefield environment, enemy capa-
ities, and anticipated courses of action.
iese HVTs are critical to the enemy com-
ander for achieving his objectives. HVTs
not take into account the impact of
endly operations. Additionally, the
emy fallback options associated with
ch operation must be analyzed and a cor-
sponding HVT list for each fallback
tion developed. Fallback options are
sed on anticipated modifications to the
emy's operation if friendly interdiction
ccessfully denied him his original course
action. This process can be cyclic, that is,
lowing each fallback option through to
e next set of fallback options and so on,
t time will probably allow for only the
tial series of fallback options to be com-
ted. Further analysis should be con-
cted when in combat and the information
eived by the situation analyst dictates
e likely possibilities.

G2, G3, and FSE targeting representa-
es select the HPTs. They base their selec-
ns on the factors of METT-T and com-
ander's guidance. They consider the
lowing specific factors:

- Time.
- HVTs.
- IPB data base.
- Available collection systems.
- Available weapon systems.
- Commander's concept of the operation.

These HPTs are HVTs which friendly collection systems can locate and which friendly fire support and EW and/or maneuver systems can attack. If HVTs cannot be acquired by friendly systems or attacked, then the HVTs cannot be HPTs.

The G2, G3, and FSE integrate the HPTs with the IPB data base and the commander's concept of the operation to select TAI. The TAI are the optimum time and place on the battlefield to attack HPTs to achieve the desired results.

The G2, assisted by the DTOCSE, develops the target data required to attack each HPT and the TAI. The CM&D section directs collection operations to identify, locate, and track HPTs. They focus on the NAI and collect the needed data in conjunction with data needed to support situation development. The ASPS, through all-source analysis, further develops each target and provides the data to the FSE. After the FSE receives the required targeting data, the means for attacking the target are determined.

DISSEMINATING AND REPORTING

The CM&D section is responsible for the dissemination and reporting of information and intelligence to subordinate units within the division, corps, and adjacent units. It ensures that combat information and intelligence are disseminated to the user in a timely manner.

The brigades and other subordinate elements of the division, which have a limited intelligence production capability, rely on division for intelligence and combat information from their adjacent units to fight their portion of the battle. They need combat and targeting information in near-real time. Timely dissemination is vital to their operations.

The means used to disseminate information and intelligence depend on the importance of the information, the perishability and sensitivity of intelligence, and the dissemination means available. Combat information, regardless of source, is disseminated by the fastest and most direct means

available to fire and maneuver elements that can use it. This may be directly from the collection system to the user.

The CM&D section disseminates perishable intelligence as it is received from the ASPS or other sources. It transmits only that intelligence that is needed—only to the elements that need it. If there is doubt about the usefulness of the intelligence to a particular unit, it should be disseminated to the unit until a positive determination of usefulness can be made. The CM&D section primarily uses spot reports transmitted via radio and telephone to disseminate time sensitive critical intelligence. It uses liaison teams, intelligence summaries, and briefings to disseminate less perishable intelligence. It exchanges intelligence summaries with corps and adjacent divisions and disseminates them to the division staff and subordinate units. This enhances a common perspective of the intelligence situation. The dissemination of intelligence is also accomplished within the division staff to help focus current tactical operations and those still in the planning stages. The ASPS, EW, and CM&D sections will provide critical intelligence, which may affect current and future maneuver and targeting operations, to the G3 and FSE as the intelligence is received. To focus the collection, intelligence production, and dissemination efforts required to support these operations, intelligence staff personnel must understand the current and planned operations of the division.

The results of intelligence planning, collection, and production will further be used in the development of intelligence and EW portions of OPLANs and OPORDs. As intelligence dissemination is the transmission or conveyance of intelligence, it can be accomplished through verbal briefings, written estimates, annexes or appendixes to OPLANs and OPORDs, or through designated operations and intelligence channels using standard tactical communication systems available within the division.

Reports of intelligence and combat information, except SIGINT or EW data, flow into the CM&D section which disseminates them to the units that need them. It disseminates combat information to the user and information to be processed to the ASPS. It forwards information needed by corps or adjacent units to their supporting CM&D section. SIGINT- or EW-derived information flows into the TCAE at the MI battalion TOC where, after analysis, SIGINT-based intelligence is forwarded to the users within the division and the ASPS for further correlation with intelligence received from other sources. The flow of information and intelligence within the division is as shown in the following illustration.

Combat information is highly perishable and must be reported quickly to fire and maneuver elements for exploitation. DS collection elements report all information except EW technical data to the supported unit. They may report combat information directly to fire and maneuver elements. They report all SIGINT/EW information to the TCAE.

GS elements, except SIGINT/EW assets, report the results of missions tasked by the MI battalion directly to the CM&D section to expedite intelligence reporting. SIGINT/EW elements report to the TCAE, which analyzes the results of their collection and reports the SIGINT produced from this collection to the ASPS for correlation with data from other sources. Like DS elements, GS elements may report combat information directly to fire and maneuver elements when the required communications are available.

ELECTRONIC WARFARE

The G3, assisted by the EW section, manages EW operations to support division operations. He integrates EW with the scheme of fire and maneuver for all phases of the battle. He allocates EW resources to support the brigades and other combat elements in support of close operations. He also integrates EW with other fire and maneuver in the deep operations.

The G3, assisted by the EW section, develops ECM requirements to support the division commander's concept of the operation. He also allocates ECM support and designates targets based on the commander's concept and associated priorities.

The EW section is the focal point for planning and managing EW operations to

160-850 O - 94 - 4

DISSEMINATING AND REPORTING CHANNELS

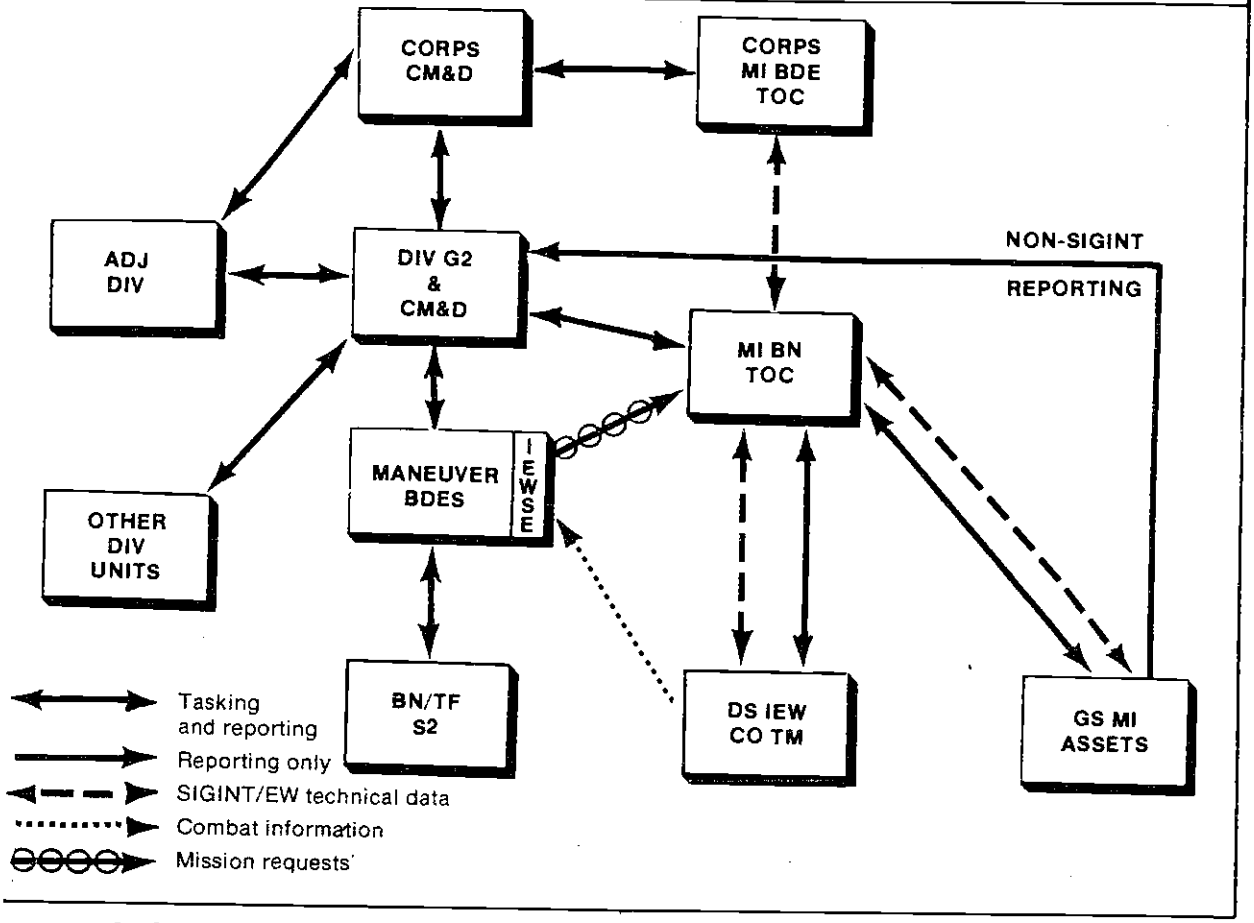

upport the battle. It works closely with the 33 and FSE to ensure limited EW assets are est used to support both fire and naneuver. It identifies requirements for ntelligence, including IPB support for EW nd forwards requests to the CM&D sec- ion. It develops EW estimates and annexes o division OPORDs.

The EW section starts the development of he division EW estimate with the division ommander's restated mission and plan- ing guidance and the corps EW estimate. he TCAE provides the status of friendly W assets based on RSRs from all EW nits operating in the division AO. The EW ection then develops and compares possi- le courses of action, including a recom- endation for the best course of action. The W estimate is then disseminated to subor- inate brigades where it will be used as the asis of further EW planning.

The EW section manages ECM operations for the G3. It coordinates with the G3, G2, C-E officer, and FSE to determine which enemy communications systems must be located for physical attack, jammed, or deceived to support the division scheme of fire and maneuver. It determines when and where to jam or to deceive, and it establishes priorities. The C-E officer coordinates with the EW section on interference reports received from subordinate units. These reports are evaluated to determine which MIJI category they fit into and if any immediate countermeasures can be taken. The EW section coordinates with the TCAE to identify ESM needed to support EW operations. It forwards requirements for ESM to the CM&D section for tasking with other collection needs. It prepares ECM mission tasking and forwards this tasking through the CM&D to the MI battalion TOC. This includes the allocation of

jamming support to subordinate commands.

The EW section and MI battalion TOC continuously evaluate the effectiveness of EW operations. The EW section is concerned with the effects of EW operations on the enemy while the TCAE assesses the technical effectiveness of EW operations. The EW section alerts the G3 when changes are required in EW support. The TCAE provides technical control data to SIGINT and EW assets and exchanges it with other commands and echelons.

Technical control data is the technical aspect of enemy communications and emitters. It includes such information as equipment and signal characteristics, net structures, frequency and call sign usage, operating techniques, and code and cipher systems. It can tell the collector or jammer how best to attack the electronic target with the EW systems available.

FM 34-40 and the classified Appendix to this FM provide detailed information on EW operations.

COUNTERINTELLIGENCE

CI operations support division OPSEC, rear operations, and deception. CI elements monitor and analyze enemy intelligence collection operations that gather information and threaten division and brigade operations and facilities.

Input of their expertise to OPSEC and deception planning assists in the development of effective measures to counter enemy intelligence capabilities and to deceive, distort, or confuse this collection. CI evaluation of enemy activities in the rear area provides critical intelligence for conducting the divisions rear operations.

Counterintelligence Support to Operations Security

OPSEC is a combination of actions taken to deny the enemy information about division forces, operations, capabilities, and intentions. Its principal elements are countersurveillance, countermeasures, and deception. To be successful on the battlefield, a commander must conceal his operations and intentions from the enemy. The systematic application of OPSEC measures provides the security needed by the division.

The G3 and G2 plan the OPSEC program for each division operation. The following illustration depicts the OPSEC process, which is used for planning.

The commander's concept of the operation provides planners with the direction and guidance necessary to prepare OPSEC plans. If the operation is to succeed, the commander and G3 normally specify critical aspects of the operation which they feel must be kept from the enemy. These critical aspects are called EEFI.

Initially, the CI analysis section identifies the enemy multidisciplined intelligence collection threat, including—

- HUMINT.
- IMINT.
- SIGINT.

The ASPS provides the CI analysis section with information concerning the enemy's collection capability. The CI analysis section analyzes this data to assess the collection threat in each intelligence discipline.

This information, combined with known enemy doctrine, forms the basis of the collection threat data base. The data base is expanded using graphic devices to include range fans, templates, and overlays. It is continually updated through close coordination with the ASPS.

The data base must be reviewed frequently to identify gaps in intelligence holdings. When gaps are recognized, the CI analysis section prepares requests for the needed information. Each request is forwarded to the CM&D section for inclusion in the division collection plan. Intelligence resulting from such requests is normally received from the ASPS.

The G3 and G2, assisted by the OPSEC staff element, CI analysis section, and appropriate elements within the command identify friendly force profiles and recommend initial EEFI. Development of friendly force profiles is accomplished primarily during peacetime and then updated as needed during combat.

THE OPSEC PROCESS

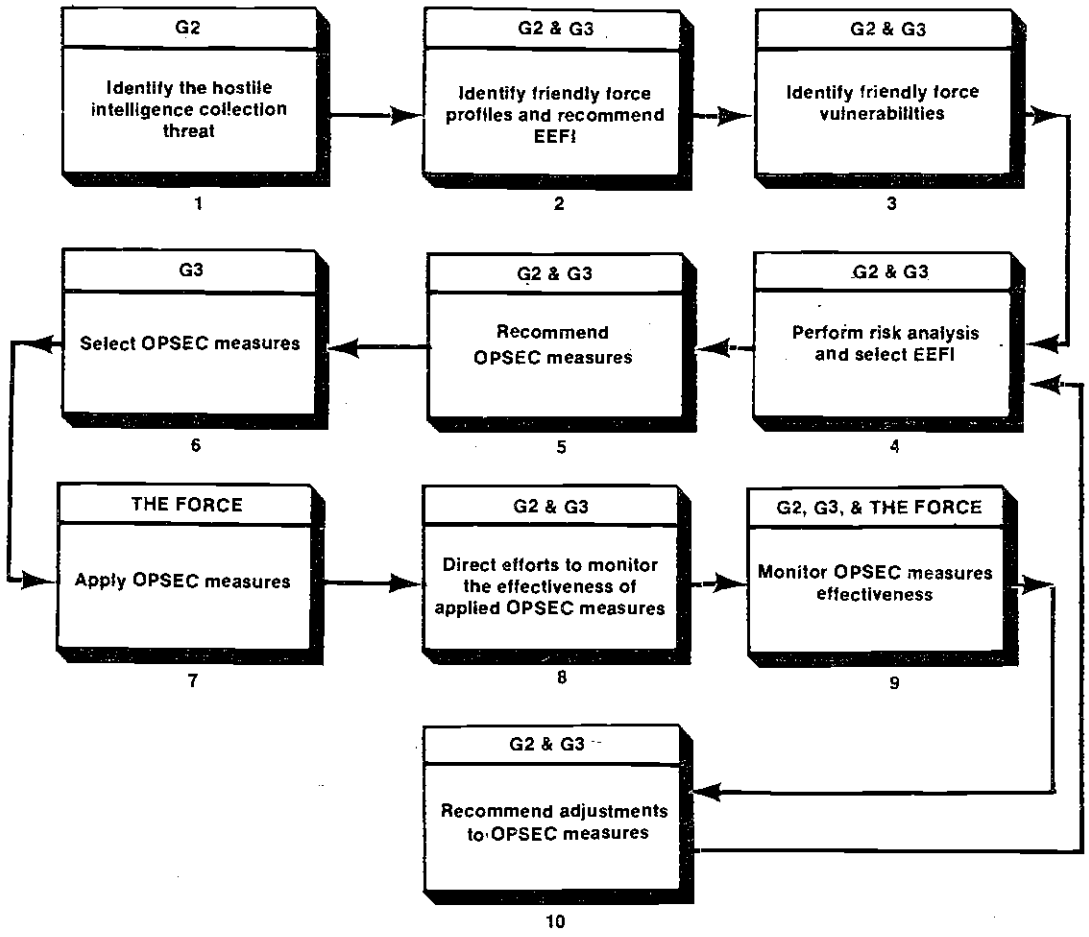

The friendly profile data base contains nformation about the division. It portrays ı picture of the division similar to what ıemy intelligence staffs would see. It ncludes the signatures and patterns pre- ented by divisional units and the division's ıperations.

US Army doctrine, division SOPs, and urrent operations are analyzed to identify vho does what, when, and where during the ıperation. Every activity presents a signa- ure and a pattern. Combinations of signa- ures and patterns form profiles indicative f force composition, the commander's ntentions, and operations in progress.

Profiles of division units are depicted raphically on overlays, using templates, nd matrices. The comparison of division rofiles with enemy collection capabilities acilitates identification of friendly activi- ties that are vulnerable to enemy detection. OPSEC measures are developed for all critical vulnerabilities to conceal the vulnerability, prevent enemy collection, or deceive his collection systems.

Closely associated with EEFI are indicators. Indicators are positive or negative evidence of activities that contribute to the determination of friendly courses of action. In preparing for combat operations, it is virtually impossible for the division to avoid revealing some indicators. Certain activities simply must be done. In many cases, these activities can be detected by the enemy and used to determine the intentions of the division commander.

Identification and interpretation of specific friendly indicators are critical tasks of personnel involved in developing the unit profile. Personnel look for indicators which

could reveal friendly vulnerabilities, capabilities, or adoption of particular courses of action. Their analysis provides a basis for the redirection of planning, decisions, and orders.

Knowledge of indicators is a prerequisite to conducting a successful OPSEC program. The correct interpretation of indicators requires knowledge about the enemy collection threat and the tactical situation. Indicators point to EEFI. They are not abstract events but are activities which result from military operations.

Vulnerability assessment orients on the enemy's intelligence collection capabilities and friendly force profiles. Comparison of the two identifies friendly force vulnerabilities to the enemy's collection threat. OPSEC measures, formulated as recommendations, are made to the G3.

OPSEC measures are interim or long-term solutions which resolve the vulnerabilities of a unit or activity. They are developed systematically after careful comparison with the hostile intelligence collection threat. Two conclusions result from this analytic process:

- No OPSEC measure is needed. Usually at least one of three conditions exists: The enemy force has no collection means to detect the activity; if detected, the activity supports a battlefield deception plan; or decision makers have decided to accept the risk.

- Apply an OPSEC measure. OPSEC measures are either planned to protect vulnerable indicators (countersurveillance), nullify specific collectors (countermeasure), or deceive specific hostile forces. Countersurveillance measures include prohibiting the activity; increased emphasis on COMSEC and other security procedures; or other OPSEC measures such as light, noise, and litter discipline. Countermeasures target the collector using physical destruction, counter-HUMINT, counter-SIGINT, and counter-IMINT methods. The use of deception, recommended to the G3, is another useful OPSEC measure. Deception operations must be fully integrated with other operations to be effective. Evaluation teams are used to determine the effectiveness of division deception efforts.

To ensure that OPSEC and deception plans are adequately supported and integrated with other operational plans, the OPSEC and deception planners coordinate with other division planning elements. They coordinate with other sections of the DTOCSE and other members of the division staff, including the G1, G4, G5, and C-E officer.

Within the DTOCSE, the CI analysis section coordinates with the ASPS, EW section, OPSEC staff element, and CM&D section. It tasks the ASPS for information from the intelligence data base to support its planning requirements. It coordinates with the EW section to ensure that electronic deception is integrated with the overall deception operation. It tasks the MI battalion for information and OPSEC support through the CM&D section. Results from such tasking are incorporated in the division OPSEC plan or deception annex. The OPSEC staff element also ensures that division requirements for OPSEC and deception are fulfilled. The success of OPSEC and deception is dependent on effective OPSEC support. The OPSEC staff element ensures that this support is provided through its mission management function.

OPSEC support missions provide a means of verifying the effectiveness of OPSEC measures taken by the command.

In performing mission management, the section identifies requirements and plans missions needed to satisfy them.

Counterintelligence Support to Division Rear Operations

In addition to knowing the hostile threat capabilities in the division rear area, CI personnel must know the scheme of maneuver for friendly units and know and understand the commander's rear operations plan. Failure to thoroughly understand these subjects can leave devastating gaps in countermeasures development and identification of critical targets. CI personnel must also be familiar with location of logistics depots, communications nodes, LOC, main supply route (MSR), and other

otential targets of interest to the enemy. A orking knowledge of resupply schedules, outes, and other logistical signatures must e established to determine vulnerabilities hostile multidisciplined collection.

OPSEC support is crucial to the conduct rear operations. The multidisciplined reat posed by enemy intelligence services as demonstrated an ability to identify aps in our security that can be exploited. ue to the more static nature of rear area nits, OPSEC must be a continual day-to-ay function. Only by denying enemy intelgence through OSPEC and portraying the lse through deception, will we ensure that e enemy commander is sufficiently consed as to our real dispositions. Through nstant vigilance, the enemy can be denied nowledge of the location and strength of ur forces.

Upgrading intelligence holdings from ports submitted by all sources plays an portant part in providing an accurate cture of enemy intentions for rear area erations. Because the rear area threat is namic, CI personnel must continually sess the threat level and develop and commend appropriate OPSEC measures e FM 34-60). The following paragraphs scribe the CI functions which support the vision's rear operations.

aison. Liaison with police, civilian and ilitary intelligence agencies, G5, and civil fairs units is a daily function. When hose rear area operations begin, cooperation tween agencies is critical in neutralizing e threat, particularly at level I (see FM -60A).

Liaison should begin prior to deployment time permits. CI personnel should carelly review division OPLANs to determine cations of aerial ports of debarkation POD), sea ports of debarkation (SPOD), epositioning of materiel configured to it sets (POMCUS) sites, and marshaling d assembly areas identified in advance the OPLAN for division use. Once these cations are determined, CI personnel ould then identify counterpart US CI pernnel currently providing area coverage. unterpart US personnel located in the PLAN AO can then assist division CI rsonnel in identifying key local national N) personnel of interest to the division. These key LN personnel can include mayors, chiefs of police, forest rangers, and local military CI personnel. Counterpart US CI personnel can also assist by providing personality data on these key LN subjects. Ideally, CONUS-based division CI personnel should conduct periodic visits to the OPLAN AO to establish personal contact. This personal contact prior to deployment can be invaluable to avoid a cold approach to OPSEC liaison. Examination of the rear operations plan through OPLAN analysis can also be a lucrative source of briefing subjects to the division commander and his staff. OPLAN analysis can provide information that is timely (when the established personal contact is exploited) and relevant since it will apply to potential real-world combat locations directly affecting the division.

In the Federal Republic of Germany (FRG) where population centers average 3.5 kilometers from each other, threat activities will be hard pressed to avoid detection. CI personnel, in liaison with town mayors, forest rangers, and local military subregion command forces may provide intelligence indicators, which in conjunction with other intelligence, may provide indications and warning (I&W) intelligence or actual locations of suspected level I threat personnel. Even Committee for State Security (KGB) special purpose teams (SPETSNAZ) personnel fluent in the local language may arouse suspicion of local personnel who know each other by sight. This information may be gathered through liaison activities. LN forces in point security missions will be valuable sources of information. Forest rangers and local militia may be able to discern unusual activity within their forests, which may be logical rally points and cache sites and offer threat forces concealment from US and allied forces.

Forest rangers will usually report such information to local police or mayors. If alerted by CI or allied intelligence, these personnel can focus increased surveillance on such areas.

To avoid duplication of effort, close planning with corps and each allied and US intelligence unit is essential prior to hostilities. CI personnel need to understand their responsibilities, usually detailed in the CI

annex to the OPORD. Prior detailed planning, reconnaissance of routes, and understanding background information of the assigned areas of responsibility are viable options. Key locations, supplemented with photographs, will quickly acclimate newly assigned CI personnel.

In areas where no host-nation agreement exists, prior planning is even more critical. Liaison may be difficult, especially if dealing with a hostile population with unknown political sympathies. Liaison, driven by the use of gray-, white-, and black-listed personnel, may provide credibility to information derived from liaison. CI personnel in support of liaison missions may be best employed in a GS role. Defined areas of responsibility ensure maximum effort and avoid duplication of reporting. An understanding of local police reporting procedures will ensure efficient liaison efforts and maximize host-nation reporting procedures. For additional information, see FM 34-60 and FM 34-60A.

Threat Awareness Training. Threat awareness training is prepared and disseminated by CI personnel to all units. Threat awareness training takes two forms. First, all personnel are given basic instructions on reporting responsibilities and channels to use when suspicious activity is observed. Unclassified information regarding the threat is provided to all personnel. Personnel with the proper clearances are given more detailed classified information regarding threat capabilities and past incidents. Second, CI personnel provide security advice and assistance.

Incident Investigations. Incidents of CI interest are investigated by CI personnel as directed by the G2. These investigations can lead to identification and elimination of perpetrators of hostile actions in the rear area. Pattern analysis of multiple incidents can reveal enemy plans and intentions. This pattern analysis can be accomplished by posting incidents on a situation map (SITMAP). By using the same tools and techniques applied to the plotting and prediction of enemy activity in the conduct of deep and close operations, trends and predictions can be made for rear operations. Postings to the SITMAP can be compared to known locations of key support activities in the division rear area, and trend activity can then be determined and analyzed.

White, Gray, and Black Lists. Gray and black lists are created and updated to permit rapid identification of key suspects in hostile rear area operations at threat level I. Persons on black lists are those personnel whose capture and detention are of prime importance to the US Army at or during the outbreak of hostilities. They include known or suspected agents, saboteurs, enemy sympathizers, and others who represent a serious threat to rear area security. White lists are maintained to identify those persons which are to be protected from enemy targeting. Definitions for white-, gray-, and black-listed persons are found in FM 34-60.

Screening and Interrogation. CI and interrogation personnel identify line crossers and refugees or defectors who can provide information of CI interest. This mission exists during times of war and peace and provides for medium- and long-range CI planning and activities. During war, CI teams located near or collocated with the division and corps EPW cage will have EPWs, refugees, defectors, and line crossers identified by interrogators as being of CI interest. CI personnel conduct interviews and interrogations of these individuals and are primarily concerned with CI information of current tactical value. Frequently, these interviews and interrogations require a joint effort by interrogation and CI personnel with the appropriate language capability.

Control and coordination of CI support to the division is organized in the same manner as applies to all IEW assets. CI teams may be deployed in GS of the division; and depending on the magnitude of the enemy threat anticipated in the division's rear area, the G2 may place CI teams in DS of DISCOM to support rear operations. In this case, CI personnel assigned a DS mission will devote their full attention to supporting the rear operations officer and providing CI support to the division RAOC. CI personnel will be responsive to requirements generated by the division G2 as well as by the rear operations officer. For additional information regarding division rear operations, see FM 90-14.

Counterintelligence Support to Deception

Deception planning is accomplished concurrently with the development of the tactical operations plan to ensure that deception operations complement and enhance mission accomplishment. Deception operations are planned so that the discovery of the deception by the enemy does not jeopardize the tactical mission.

Each successful case of deception has four common elements:

- ☐ Knowledge of the enemy and his intelligence system.
- ☐ A deception objective.
- ☐ A believable story.
- ☐ Denial of true dispositions and intentions.

Planning for deception operations is accomplished concurrently with the planning of the tactical operation. Deception is addressed in the commander's initial guidance to his staff. During the formulation of friendly courses of action, possibilities for achieving deception are considered. Development of the deception plan follows the same general procedure used to prepare the PLAN or OPORD.

Once a course of action is chosen, the PSEC staff element identifies or updates friendly force profiles and vulnerabilities based upon EEFI established for the operation. Vulnerabilities that cannot be adequately protected by normal measures are candidates for deception measures. These deception measures must not conflict with the deception objective and must complement the deception story. In this step, the PSEC staff element may be tasked to further develop deception techniques identified in the previous step. The manipulation and concealment of friendly force profiles will be key in deception planning operations. For example, if a feint is to be executed by a battalion-sized unit that must appear to be a brigade-sized unit, then that battalion's profile must represent a full brigade profile to the enemy's collection assets. The unit that is actually going to conduct the main attack must conceal those indicators that will reveal its mission to the enemy.

Execution of a deception operation requires intelligence on any significant changes to data furnished earlier, indicators of enemy reactions to inserted data, and suggestions for improving the deception means or techniques. The deception plan may require exposure of an EEFI to enemy intelligence. Disclosures of this EEFI will be monitored and evaluated as part of this deception process. A major role of the unit's CI assets during execution is to counteract enemy intelligence collection efforts that can identify the deception plan and to recommend modifications to the plan as needed. Other intelligence assets are responsible for providing information on the enemy's responses. The OPSEC staff element and CI analysis section may be tasked to assist in the analysis of intelligence to determine what the enemy is doing and is likely to do. This feedback provides information needed to determine if the deception should be continued, terminated, or modified.

Intelligence is a prime ingredient required for assessing the effectiveness of a deception operation. Operational results vary and in-depth analysis of what happened, and why, is made to assess the effectiveness or ineffectiveness of specific deception techniques. The OSPEC staff element determines the effectiveness of OPSEC measures employed to protect the real story in the deception operation. To know the enemy well enough to deceive him requires the effective use of CI. CI is employed in the identification of the hostile multidisciplined intelligence collection threat, the determination of friendly vulnerabilities to that threat, and the recommendation and evaluation of OPSEC measures. The requirement for CI to identify the hostile multidisciplined intelligence collection threat is critically important. When portraying the false as real, it is essential that deception activities be oriented on identified hostile intelligence collectors. For example, the selective and intentional disclosure of information by voice communications serves little use if the intended enemy collection receiver is not in a position to successfully intercept the information. Another critical consideration is knowing the enemy intelligence analysis system and how long the system requires to process information. Deception

information must be provided to the enemy through his established intelligence system in time to process the information and to allow the enemy commander to react, while at the same time, not permitting time for careful analysis which might discover the deception.

CI analysis supports deception by providing detailed analysis of threat doctrine, tactics, and capabilities with regard to enemy intelligence and EW systems. The CI analyst is responsible for detailed analysis of the enemy collection threat. This information is one half of the OPSEC data base and is managed by the CI analysis section under the G2 (Step 1, OPSEC Process). The same types of information about the enemy collection assets needed for OPSEC are required for deception operations.

The CI analyst must understand the enemy command and decision-making structure. Seeing a centralized structure, such as the Soviet or Warsaw Pact Threat, leads to the assumption that all decision-related data flows to a central fusion activity or point. This is important to the success or failure of the deception story; because in such a system, there is less chance of potentially vital, deceptive indicators being lost at intermediate filter or fusion centers.

The CI analysis of the enemy intelligence system, once completed, recognizes the strengths and weaknesses of the enemy's analytical ability. It further determines the amount of information which must be known by the enemy so that he will draw the appropriate conclusions and react in the manner intended in the deception objective. It is crucial that the CI analyst estimate the enemy's vulnerabilities to friendly deception as accurately as possible. This requires that friendly intelligence knows the enemy as well as he knows himself.

The deception operation must achieve a delicate balance in the amount of true and false data the enemy is permitted to collect. Enough data must reach the enemy analyst to allow conclusions to be drawn about our apparent intentions without raising suspicions about the deception itself. CI will recommend which elements of information should be exposed to which sources of enemy collection and the most effective, least suspicious way of presenting each element. It is necessary when painting the deception picture to add a certain degree of truth to the false, and the CI analyst recommends how much truth is to be revealed. Realism is directly proportional to the type of deception employed, which also dictates how long the deception must last in order to be effective. It is important to understand that the more sophisticated the deception's story, the longer the execution of the deception operation must be.

Based on the assessment of the enemy's intelligence system and a comparison with the deception objective, the CI analysis section and OPSEC staff element prepare recommendations for deception measures. The CI analyst's responsibilities are—

- ☐ Know the enemy.
- ☐ Know friendly profiles.
- ☐ Make recommendations based on that knowledge.
- ☐ Drive collection requirements to determine the success or failure of the deception.
- ☐ Recommend a mix of true and false information to be targeted at enemy collection assets.

Postaction analysis of the success or failure of the deception operation enhances the ability of the CI analyst to plan for future operations and provides further analysis of friendly OPSEC procedures.

CHAPTER 5

Combat Operations

Elements of the IEW system are joined vith other combat and support elements of he division to form the combined arms eam required to fight the air-land battle. The employment of IEW resources, as integral parts of the combined arms team, mul-iplies the combat power of the division. These assets enable the division to effec-ively use fire and maneuver, determine nemy intentions, disrupt enemy C^2, and rotect the division and its operations from he enemy intelligence effort. The division ntegrates IEW with the commander's cheme of fire and maneuver to support all hases of the air-land battle.

This chapter describes the doctrinal prin-iples for employing IEW resources in sup-ort of various types of combat operations nd battlefield environments. It describes ow IEW assets deploy, focus their efforts, nd integrate their operations with the divi-ion and its subordinate unit operations. 'or special operations and environments, ee Appendix D.

The division commander directs and sup-orts brigade operations against enemy rst echelon regiments in the conduct of the ivision's close operations. He concentrates ombat power to the division main effort nd to those areas where he expects the de-isive battle to be fought. He uses economy f force in other areas of the battlefield. At ne same time, he interdicts second-echelon egiments and lead elements of second-chelon divisions to keep them out of the attle until the brigades defeat assaulting nemy echelons or opportunities are created r bold offensive action. He simultaneously ustains his forces and protects against ncursions in the division rear area. His concept of the operations is designed to create opportunities to gain or retain the initiative. Intelligence plays a major role in this total battle.

The division commander plans deep operations based on the factors of METT-T and IPB analysis. He begins planning for the interdiction of second-echelon forces while they are deep in the division area of interest. He identifies and plans the attack of HVTs well before the situation places the enemy force at the point selected for interdiction. He projects how enemy second-echelon forces will react to friendly activities. He selects the targets, time, and place of attack based on his prediction of the situation at the projected time and place of attack.

The division commander begins the interdiction battle against identified enemy forces as soon as they are within his area of influence. He directs attacks against HPTs to achieve the greatest effect with the minimum use of available weapons, lethal as well as nonlethal.

The selection of weapons and targets for deep operations is critical. The limited weapons available to the division—division and supporting corps artillery, aerial weapon systems, allocated air force sorties and EW systems—must be employed in support of the division's deep, close, and rear operations. Therefore, each weapon used must achieve maximum results. Only the HPTs whose destruction will contribute significantly to the accomplishment of the division mission are attacked. These targets are preselected during the planning phase of an operation.

INTELLIGENCE AND ELECTRONIC WARFARE SUPPORT DURING DEPLOYMENT

Upon receiving the order to execute an operation, the G2, assisted by the ASPS, updates the intelligence estimate including the IPB data base. The ASPS identifies gaps in the intelligence data base. It tasks the CM&D section to acquire the required information and intelligence. Initially, corps or intelligence elements, already deployed in the operational area, collect the required information.

If the division is required to deploy to the operational area in a mid- to high-intensity conflict, it may do so under the protection of a covering force. The covering force provides accurate information about the terrain and enemy forces forward of division positions. The ASPS uses this information to update the IPB data base and intelligence estimate. It also requests through the CM&D section and TSO, USAF tactical reconnaissance sorties to collect information needed to support deep operations.

As division units deploy to the AO, they are tasked to collect needed information about the terrain and enemy within the division's areas of operation and interest. The corps covering force and the corps ASPS hand off enemy forces to the division as enemy units enter the division area of operations.

The CM&D section directs the collection effort to ensure that resources are used effectively to satisfy the command PIR and IR. It uses event templates and event analysis matrices, developed during IPB, to focus collection missions to key areas on the battlefield. Enemy activities in the NAI provide indicators of enemy direction, rate of movement, and adoption of probable courses of action. The CM&D section focuses collection operations on NAI to identify, locate, track, and determine the activities of the HPT selected for attack.

The ASPS uses information from all sources to maintain a current and accurate intelligence estimate and identify and locate HPTs. Integrated, all-source intelligence satisfies the commander's situation and target development requirements. It enables him to make sound and timely decisions and to attack HPTs at the selected time and place on the battlefield. FM 34-3 describes situation and target development in detail.

INTELLIGENCE AND ELECTRONIC WARFARE SUPPORT TO COMBAT OPERATIONS

MI resources are employed to satisfy the IEW requirements supporting the division's deep, close, and rear operations. Resources may be allocated in GS of the division and in DS of the brigades and other subordinate units of the division. DS resources, though controlled by the MI battalion, respond to brigade IEW requirements based on established priorities. This is particularly true of ground-based signals intercept and jamming systems, which are controlled by the MI battalion TOC and TCAE, but primarily support the brigades in the division's close operations.

DEPLOYMENT OF MI RESOURCES

The employment of MI resources are based on the factors of METT-T, the division commander's concept of the operation, and the missions and task organization specified in the division OPLAN, OPORD, or fragmentary orders (FRAGOs).

The MI battalion commander, upon receipt of his mission or order to execute a contingency plan, task organizes organic and supporting MI assets to accomplish the mission. Task organization provides for the most effective use of IEW resources according to the division commander's priorities. Normally, MI resources are task organized into IEW company teams. When possible, MI elements deploy with the force that they will support or in whose area they will operate.

Most ground-based MI assets will normally operate in the brigade and battalion task force AO, either in GS of the division or in DS of the brigades. FM 34-80 describes how MI units deploy, coordinate, select, and occupy operational sites in the brigade AO.

Flight Platoon

The flight platoon, equipped with the QUICKFIX system, may deploy to and operate from the division airfield. It may also operate from other areas within the division AO, relying on support from air-mobile maintenance teams and forward arming and refueling points (FARP). It initiates signals collection operations early in the deployment to find and track the enemy and locate and identify HPTs while they are still at extended ranges. The platoon provides coverage of the division AO while ground-based assets initially deploy or move.

The QUICKFIX system is well suited to provide continuous support of fast moving operations. It is the jamming system most responsive to rapidly changing requirements across the entire division. It is used to—

- ☐ Locate enemy jammers for destruction by fire.
- ☐ Locate or jam key enemy division to first-echelon regiment C^3 nets.
- ☐ Locate or jam enemy air defense communications nets.
- ☐ Locate or jam enemy intelligence reporting nets.
- ☐ Locate or jam enemy fire control nets.

The platoon is used to provide wide area coverage of the division's areas of operations and interest. It complements ground-based signals collection and jamming, covering deep areas and areas that are inaccessable to ground-based systems due to LOS constraints. It participates in coordinated DF and jamming missions with ground-based systems.

This extends the baseline for more accurate fixes in DF operations. It increases the security of jamming systems by jamming alternately or randomly from widely separated locations. These same benefits can be gained by employing two QUICKFIX systems on a mission.

The MI battalion TOC directs QUICKFIX missions based on mission tasking received from the division CM&D section. The tasking message from the MI battalion TOC to the QUICKFIX platoon operations center specifies—

- ☐ The target and target area.
- ☐ The general flight path or orbit.
- ☐ Times on target.
- ☐ Requirement priorities.
- ☐ Technical intercept and jamming data.
- ☐ Reporting requirements.

In addition to targeting information contained in the mission briefing the aircrews receive, the information includes terrain, weather, and flight data and the locations and fire fans of enemy air defense systems that are capable of engaging the mission aircraft.

The success of QUICKFIX missions depend on how well they have been planned. The MI battalion TOC (TCAE), flight platoon leader, and aircrew share the planning responsibility. They use IPB products such as terrain factor overlays depicting air avenues of approach and LOS restrictions, weather forecasts, event templates, and event analysis matrices. They also use current maps and intelligence data as planning tools.

They fly missions in a stand-off mode, selecting the optimum flight orbit and altitude to get the best LOS to target emitters and receivers and avoid enemy air defenses (see the following illustration). Two or more aircraft may fly coordinated missions with ground-based systems. This serves to extend the baseline for DF operations or confuse enemy REC systems during jamming missions.

SIGINT Processing Platoon

The SIGINT processing platoon, consisting of the TRAILBLAZER and TEAM-PACK systems, is normally employed in a GS role.

TRAILBLAZER, a communications emitter locating system deployed well forward in the brigade AO, consists of two MCSs and three outstations, or five MCSs. It operates as a single, integrated system to intercept, locate, and collect technical data

QUICKFIX FLIGHT ORBIT

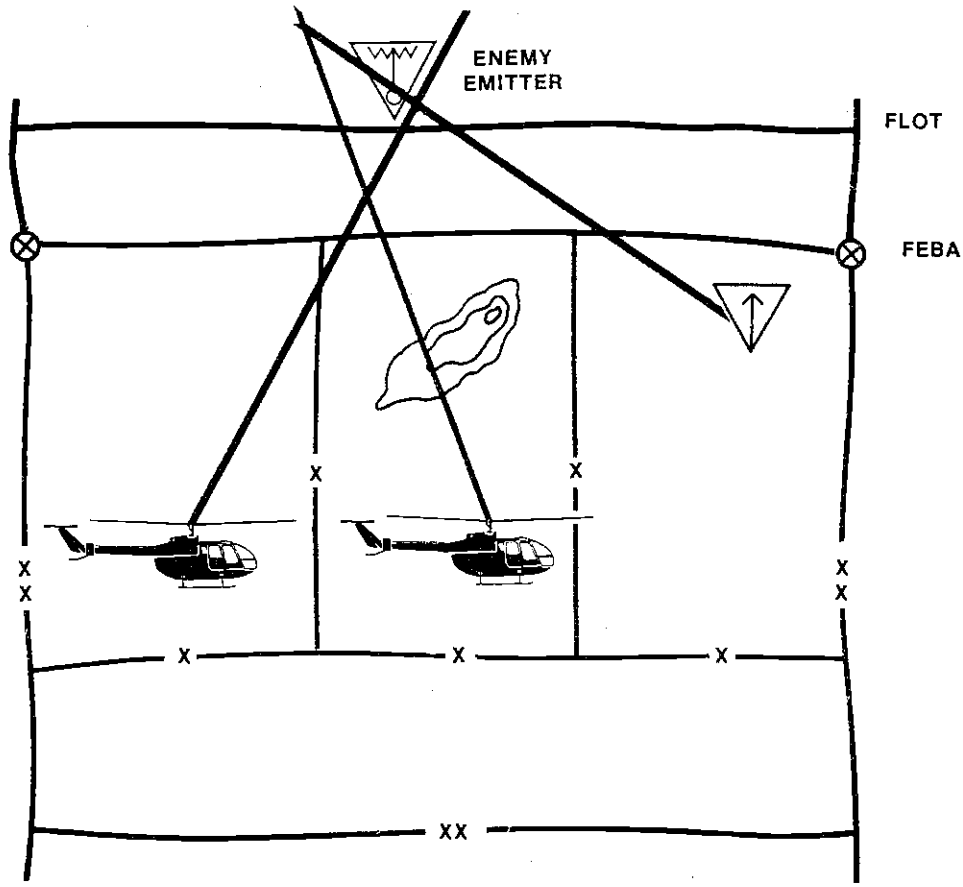

and COMINT on key enemy communications emitters in support of division intelligence and targeting requirements. It focuses on key enemy fire and maneuver C^3 nets. It passes intercept and DF data to the TCAE, which correlates it with other SIGINT data to produce SIGINT and technical control data. The TCAE passes combat information to the brigade through the IEWSE and analyzed SIGINT to the ASPS at the DTOC for integration into the all-source intelligence network.

TEAMPACK is a noncommunications intercept system which is also deployed well forward in the brigade AO. It is used to identify and locate critical enemy air defense, surveillance, and target acquisition radars. The TEAM PACK has a capability to locate enemy radars when netted under the control of the SIGINT processing platoon headquarters. FM 34-80 further describes the operation of the SIGINT processing platoon.

Collection and Jamming Platoons

The C&J platoons provide communications intercept and jamming support to the division and its brigades. They deploy well forward to support division and brigade requirements. They respond to asset tasking from the TCAE. The IEWSE passes brigade requirements to the TCAE.

The voice collection teams, equipped with e AN/TRQ-32 and either the AN/TRQ-30 PRD-10 communications intercept sys-ms, focus on enemy C^3 in support of the vision's close operations. One of its pri-ary functions is to collect technical data support of ECM operations. It also pro-des targeting data and other combat formation to fire and maneuver forces. It sses intercept information directly to the &A team, which in turn reports it to the AE. COMINT reporting from the T&A am is monitored by the IEWSE within the igade CP for immediate use by the igade.

The VHF ECM teams, equipped with the N/MLQ-34 (TACJAM) ECM system and e HF/VHF ECM teams, equipped with e AN/TLQ-17A ECM system, provide MJAM support to the division. MJAM is a vital part of the division's se operations. It is used to disrupt enemy F and VHF communications nets at criti-l times and places on the battlefield. It ay be used to complement or as an alter-tive to lethal attack means such as fire d maneuver. Jammers support close erations by—

- Jamming key enemy communications at critical times.
- Performing communications intercept when not performing ECM.
- Screening critical division communications.
- Transmitting emergency messages.

ECM teams target enemy radio nets cording to priorities established by the ision fire support plan. Target nets nor-lly include—

- C^3 links between divisions, regiments, and battalions.
- Artillery fire control nets.
- Intelligence reporting nets.
- Air defense C^3 nets.
- REC nets.

Due to LOS requirements, jammers must loy well forward which places them hin range of enemy artillery. They are me targets for enemy attack; thus, they st move often. Employing jammers at separate locations against a single target also reduces their vulnerability to enemy detection and location.

FM 34-80 describes how C&J platoons operate in support of brigade operations.

Surveillance Platoon

The surveillance platoon, with ground surveillance radars, provides "eyes and ears" to the brigades, BTFs, and compa-nies. They may be placed in direct support of, or attached to, maneuver units down to company level. They may actually operate with platoons and squads. They are used to—

- ☐ Provide early warning.
- ☐ Detect and locate targets.
- ☐ Search and monitor avenues of approach.
- ☐ Provide surveillance of areas between friendly units and on flanks.
- ☐ Vector friendly units.
- ☐ Cue shorter range acquisition or weapon systems.

FM 34-80 provides a detailed description of how GSR supports combat operations.

Long-Range Surveillance Unit

In accordance with the division R&S plan, long-range surveillance unit (LRSU) teams establish observation posts beyond the FLOT along major avenues of approach and key terrain to observe activity at NAI and TAI. They provide reports of activity at NAI and TAI as well as general combat information concerning enemy movement, equipment, and other activities. They pro-vide information to help locate, identify, and track enemy forces and HPTs. LRSU teams provide critical information to sup-port the assessment of friendly maneuver options by providing detailed information about the terrain such as routes and maneuver space, obstacles, LOS, and drop/landing zones beyond the FLOT. They also assess the results of deep operations.

LRSU teams may be inserted into their operational area by helicopter, parachute, water, or ground infiltration. During retro-grade operations or withdrawal of the

covering force in a defensive operation, LRSU teams may be employed in a stay-behind mode.

Interrogation Support

The interrogation teams organic to the MI battalion provide interrogation support to the division to simultaneously provide support to the brigades and to sustain IPW operations at the division's central collection point.

Interrogation support to the brigades includes IPW screening operations and EPW interrogations to satisfy brigade needs. They focus on the brigade PIR and IR. FM 34-80 describes interrogation support to the brigades in greater detail.

Interrogation assets in GS of the division conduct more detailed interrogations which are focused on the division PIR and IR. They attempt to acquire detailed information about the missions of enemy units and detailed OB information. Interrogation teams report information to the CM&D section based on tasking from the MI battalion TOC. They submit spot reports concerning information of immediate tactical value and interrogation reports for more detailed information.

Counterintelligence Support

The CI team provides CI support to the division with the objectve of protecting the divsion and its operations from the hostile multidiciplined intelligence threat and from subversion, sabotage, and terrorism. This CI support, which is described in detail in FMs 34-60 and 34-60A(S), includes—

- ☐ Countering the multidisciplined (HUMINT, SIGINT, IMINT, and MASINT) threat.
- ☐ Support to OPSEC.
- ☐ Support to battlefield deception.
- ☐ Support to rear operations.
- ☐ Support to terrorism counteraction.
- ☐ Tactical HUMINT operations.

CORPS MILITARY INTELLIGENCE SUPPORT

The corps MI brigade also supports the division's operations. This support includes aerial assets from the corps MI battalion (aerial exploitation (AE)) and ground-based assets from the MI battalion (tactical exploitation (TE)).

The MI battalion (AE) provides aerial signals intercept support to the division with the GUARDRAIL and QUICKLOOK assets of the aerial EW company. The aviation company (aerial surveillance (AS)) provides aerial surveillance support.

AERIAL SIGNALS INTERCEPT SUPPORT

The AEW company normally provides near-real time COMINT and DF to the division through the GUARDRAIL tactical commander's down link terminal located in the TCAE of the MI battalion. The AEW assets are usually employed in GS of the corps where they provide wide-area coverage, economical use of resources, and flexibility to redirect the effort as priorities change. Subordinate division requirements can usually be satisfied by these GS missions. When necessary, priority of support may be directed to a particular corps element. The AEW company assets include the GUARDRAIL system for communications intelligence and the QUICKLOOK system for noncommunications intelligence.

Because of their extended LOS, these sys-
ms are suited for long-range, wide-area
verage to satisfy deep operational
quirements.

UARDRAIL System. The GUARDRAIL
ovides collection and emitter location
formation for enemy communications
stems. It intercepts enemy HF, VHF, and
HF communications emitters and locates
rough DF HF and VHF communications
nitter. It processes the information and
ports it to users over secure, direct com-
unications links in near-real time. The
stem consists of—

- A remotely controlled collection and data transmitting system aboard an RU-21 or RC-12 aircraft.
- Ground support and maintenance equipment.
- An integrated processing facility (IPF) from which ground operators operate the system.
- A commander's tactical terminal (CTT) located within the TCAE of MI units throughout the corps.

Two aircraft normally are employed for each mission to optimize the emitter location capability. Continuous maximum spacing between aircraft is desired to establish the longest DF baseline. The aircraft fly over friendly controlled areas in a stand-off mode. The nature of the terrain, anticipated location of target emitters, and the enemy air defense threat dictate the distance behind the FLOT and altitude for each mission. The following illustration depicts a normal GUARDRAIL DF mission.

GUARDRAIL MISSION

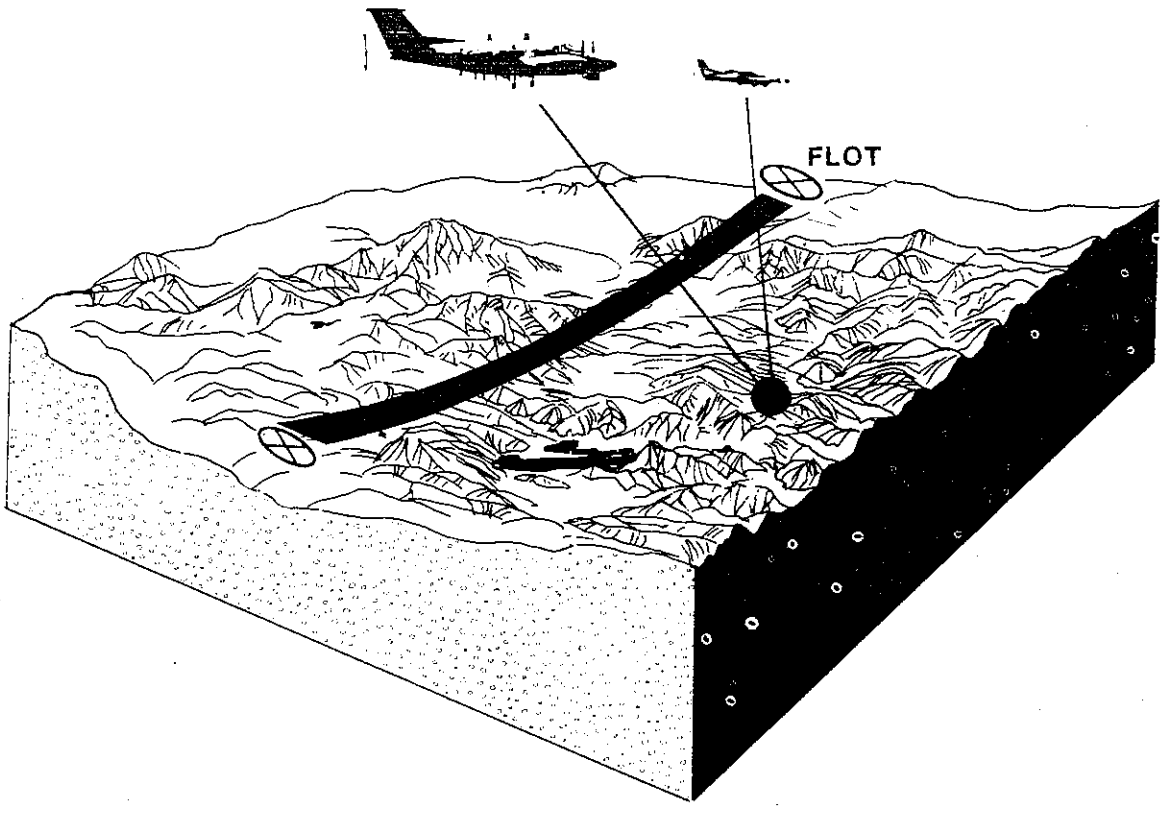

Operators within the IPF remotely control the airborne collection equipment, process data received from the aircraft, and transmit the processed information through the aircraft as a relay to CTTs within the corps. Missions must be flown within the range and LOS of the target emitters. Additionally, the aircraft must maintain LOS to each other; one of the aircraft must maintain LOS to the IPF and all CTTs.

The GUARDRAIL system provides communications links as depicted in the following illustration.

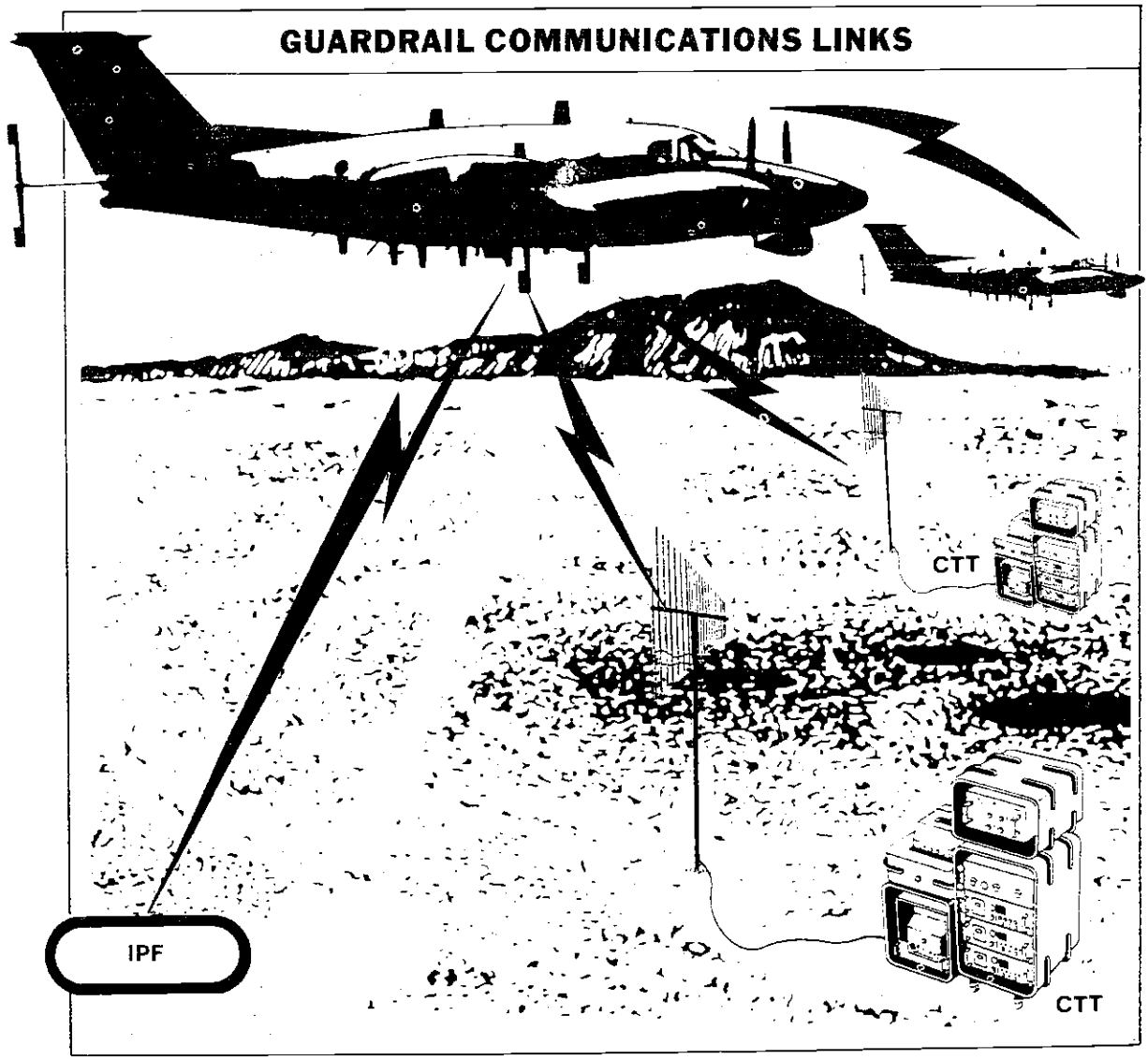

UICKLOOK System. The QUICK-)OK is an airborne ELINT collection and ıitter location system. It provides com-anders with the identification, location, ıd deployment of noncommunications ıitters. The system is mounted in the /-1D aircraft.

The QUICKLOOK provides classification ıd location of noncommunications emit-:s to a ground-based data collection and ıitter location facility by digital data link. ıe aerial portion of the system consists of :ountermeasures receiving set and a digi-l communications link.

The countermeasures set collects and pro-sses data as it detects enemy ground-.sed emitters. Upon return of the aircraft its airfield, the collected information is moved from the receiving set data files for ıalysis. The system in the aircraft can riodically transmit its data to the ground ocessor via data link. As the ground pro-ssor receives the collected data, the opera-: passes combat information directly to e corps and its subordinate divisions by e fastest means available.

Like the GUARDRAIL, QUICKLOOK ıssions are flown in a stand-off mode. An ›ngated flight profile parallel to the FLOT used. Distance from the FLOT depends . the mission, terrain, and enemy air fense threat. Each leg of the flight track of sufficient length to establish an ade-ıate baseline consistent with anticipated nges to the targets.

Aerial Surveillance Support

The aviation company (AS) of the corps I brigade provides aerial imagery and rborne SLAR support to the corps and the visions.

SLAR provides wide area coverage of the rps front, including parts of the division eas of operations and interest forward of e FLOT. It transmits imagery in near-real ne to ground sensor terminals (GSTs) cated within the corps. SLAR missions tect enemy movement along the major renues of approach and LOC. SLAR ıagery, when compared with IPB overlays and templates and the intelligence SITMAP, helps intelligence analysts develop target data and predict enemy courses of action.

The aviation company (AS) provides aerial imagery support to the division on a mission basis. Aerial imagery, to include photography and infrared, offers the division high-resolution imagery of HPTs and target areas. Normally, the division receives imagery analysis reports, unless the actual imagery is specifically requested. Actual imagery is an invaluable aid for planning operations, especially IPB. Aerial imagery missions that require penetration of enemy airspace are, however, limited by the vulnerability of the aircraft to enemy air defense systems. They normally are flown only when the information is vital to the success of the operation and there is no other means of acquisition.

Visual reconnaissance is part of every aerial surveillance mission. Aircrews submit in-flight reports of any significant enemy activity that they observe. They report to their company operations center, which in turn forwards the report to the corps CM&D section. The corps CM&D section passes these reports to the division CM&D section.

Counterintelligence and Interrogation Support

The heavy division's organic CI and interrogation resources are very limited. The division relies on additional resources from the corps MI brigade to augment division resources. The corps G2 allocates CI and interrogation support to the divisions in accordance with the corps commander's priorities. Priorities are based on—

- ☐ Resources available to support the corps.
- ☐ The nature of the threat to the divisions and the corps rear.
- ☐ The mission and commander's concept of the operation.

The MI battalion commander controls augmenting CI and IPW teams from the corps MI brigade and employs them to accomplish missions assigned by the G2.

INTELLIGENCE AND ELECTRONIC WARFARE SUPPORT TO OFFENSIVE OPERATIONS

The division commander gains the initiative by taking the fight to the enemy and reaching decisions on his own terms. He seizes the initiative by detecting and exploiting every opportunity to attack or counterattack. He seeks to attack enemy weak areas and exploits gaps in his formations. The employment of nuclear and chemical weapons on the air-land battlefield can rapidly alter combat power ratios, creating opportunities for offensive operations.

The primary purpose of offensive operations is to destroy enemy forces. However, it is not necessary to destroy every enemy formation to win. Attacks that avoid enemy strength, but reduce the will and fighting capabilities of his forces, are the fastest and least costly means to win.

The major types of offensive operations are—

- ☐ Movement to contact.
- ☐ Hasty and deliberate attacks.
- ☐ Exploitation and pursuit.

MOVEMENT TO CONTACT

The movement to contact is an operation conducted to gain or to reestablish contact with the enemy. Its purpose is the early development of the situation to provide an advantage prior to decisive engagement. It is characterized by decentralized control and rapid commitment of forces from the march. It terminates when determined enemy resistance requires the deployment and coordinated effort of the division.

The division organizes its forces to facilitate rapid and secure movement. Normally it moves in multiple brigade columns. Movement elements are the covering force; the advance, flank, and rear guards; and the main body. These groupings provide for—

- ☐ Rapid and uninterrupted advance of the division.
- ☐ Adequate all-around security and the early development of the situation.
- ☐ Retention of the bulk of combat power uncommitted during movement.
- ☐ Rapid, coordinated employment when decisive contact is made with enemy forces.

Primary emphasis is placed on the best use of the road nets and the terrain. Through IPB, supplemented by air and ground reconnaissance when possible, routes are selected that provide for rapid movement, maneuver space, and LOS for communicating, shooting, and the effective employment of IEW systems.

Primary considerations for organizing a movement to contact is the action anticipated during movement and requirements for maneuver and fire support. The division commander and staff continually analyze the situation during the move, shift forces, and alter the plan as required by the situation.

A highly mobile force, such as the armored cavalry squadron or a battalion task force, may form the nucleus of the division covering force. The covering force is reinforced with field and air defense artillery, engineering, and IEW assets. The primary task of the covering force is to locate the enemy, provide early warning, deceive the enemy as to the location and strength of the main body, and develop the situation.

Intelligence Support to the Movement to Contact

Movement to contact operations are generally characterized by vague information about the enemy. The primary objective of the division IEW system is to detect and locate enemy first echelon units early. It locates and identifies critical elements of his C^3 system, fire support system, and REC assets. It also locates enemy reinforcements or follow-on units and determines their strength and direction of movement.

The IEW system must enable the division and subordinate commanders to "see the battlefield." They need—

- ❑ The location, direction of movement, strength, and capabilities of enemy forces.
- ❑ The identification and location of HPTs.
- ❑ Enemy intentions.
- ❑ Early warning.
- ❑ Terrain information, such as avenues of approach and mobility corridors, obstacles, and LOS.

The division IEW system, through IPB, egins to provide this information during ıe planning stage. IPB identifies where oth friendly and enemy forces can move, ıoot, and communicate. The G2 uses event ɜmplates to plan and execute the collection nd surveillance effort. The G3 uses terrain ıctor overlays, especially the combined bstacle overlay, to select the division's axis f advance and brigade mobility corridors.

The G2 employs long-range collection and urveillance capabilities to find and follow ıe enemy and provide early warning. To rovide information that is beyond the col-ɜction capabilities of division systems, he ɛlies on corps and Air Force long-range urveillance and reconnaissance systems, uch as SLAR and tactical air econnaissance.

Electronic Warfare Support to the Movement to Contact

During the movement to contact, SIGINT nd EW resources are employed primarily ɔ identify, locate, and collect technical data n key enemy emitters. The capability to ɔcate enemy emitters with ground-based ystems is limited during movement. Jam-ıing is limited due to the limited availabili-y of targets and the need to preserve)PSEC. Jammers are, however, prepared to ɜm selected targets upon contact with the nemy. Intercept teams pass combat infor-ıation collected to their supported ıaneuver elements or to FSEs. They pass echnical control data and information to upport intelligence to the TCAE.

Intercept priorities to locate the enemy normally include enemy—

- ❑ C^2 nets: maneuver, fire support, engineering, and other critical functions.
- ❑ Intelligence nets.
- ❑ Jammers.

MI Support to the Covering Force in a Movement to Contact

A full complement of multidisciplined MI resources supports the covering force (see the following illustration). To ensure effective coordination and control, they will normally be task organized into an IEW company team. Due to the nature of covering force operations, the IEW company team and most of the supporting MI assets may be attached to the covering force. The IEW systems assigned to support the covering force must be highly mobile to keep pace with the covering force. Ground-based systems must be capable of rapid displacement. They operate in pairs leapfrogging between positions to provide continuous coverage. Aerial assets, including those of the division, corps, and the supporting tactical air reconnaissance unit, habitually support the covering force. They provide continuous, long-range coverage over wide areas forward and to the flanks of the division. They are used to cue other systems, to confirm or refute information reported by other agencies, and to provide continuous coverage while ground-based systems displace.

SIGINT/EW assets consist of signals intercept and ECM teams. Either voice collection or TRAILBLAZER teams may be assigned to provide communications intercept support. Mobility requirements may preclude the employment of the TRAILBLAZER as a system in the covering force during a movement to contact. The use of voice collection teams with the covering force frees TRAILBLAZER for employment in more static positions to conduct DF operations before and when contact is made with enemy forces. The ECM teams are also used for communications intercept during

MI SUPPORT OF MOVEMENT TO CONTACT

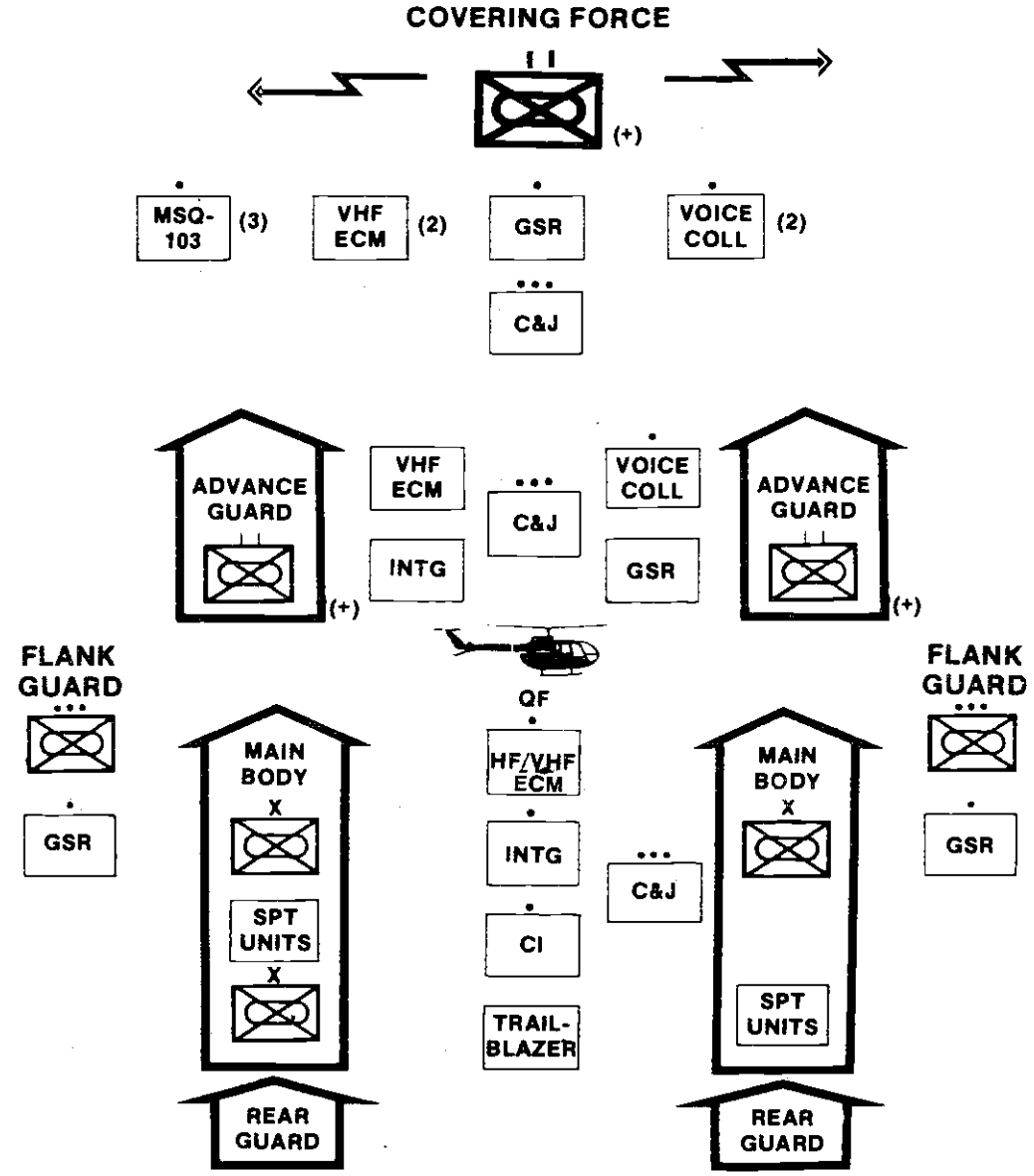

NOTE: DOES NOT SHOW ALL MI ASSETS.

the move when not conducting ECM operations. They are prepared to initiate jamming operations upon contact with the enemy. TEAMPACK alerts the covering force commander to the activation of enemy radars. Signals intercept systems identify and collect technical data on key enemy C^3, target acquisition, and fire control systems. They monitor communications nets for exploitable information. They pass target data and other combat information to maneuver units, FSEs, or jammers. Until

ntact is made with the enemy, ECM is ed only where the benefits clearly out-eigh the risks to OPSEC and jammer rvivability.

The QUICKFIX flight platoon comple-ents the ground-based EW assets. Aircraft e particularly suited to intercept, locate, d identify transmitters and jam enemy ceivers during fast-moving operations. UICKFIX aircraft are able to overcome dio LOS limitations and have the mobili-to provide continuous support. Upon con-ct with the enemy, aerial systems shift eir priority to locating deep targets and emy jammers, while ground-based sys-ms support the units in contact. The UICKFIX flight platoon—

- Intercepts and identifies enemy C^3 nets between first echelon battalions, regiments, divisions, and supporting artillery units.
- Locates and jams air defense communications.
- Intercepts, locates, and jams communications between enemy reconnaissance elements and their parent units.
- Intercepts and locates enemy jammers for destruction by fire.

Surveillance Assets

GSRs are employed with the covering rce and advance and flank guard ele-ents. They provide early warning, infor-ation on enemy movement, and targeting formation. They provide continuous sup-rt through leapfrog movement between sitions on dominant terrain, monitoring e terrain forward and to the flanks of the iendly unit for enemy movement.

LRSU teams are inserted along the ovement to contact route to observe emy movement and other activities. They ovide information to help identify enemy rmations and to determine their composi-on, weapons and equipment, and inten-ons. When possible, LRSU teams will con-rm the existence and location of key emy forward CPs based on tipoff infor-ation provided by COMINT/DF systems. nce located, enemy CPs will be targeted r destruction and friendly maneuver will be directed to exploitable weaknesses identified in enemy defenses.

Interrogation Resources

Interrogators move with and support the covering force and advance guard. Until contact is made with the enemy and EPWs are available, primary sources of information are limited to refugees, line crossers, and other noncombatants. As EPWs are captured, IPW teams conduct hasty screening operations and interrogations for information of immediate tactical value. The division relies on additional interrogation teams from the corps TEB. Interrogators determine—

- Locations, size, composition, and direction of movement of enemy forces.
- Enemy objectives.
- Location of minefields, obstacles, and antitank weapons.
- Terrain conditions along the route of advance.
- Intelligence related to personalities of enemy commanders.
- Enemy plans and intentions.

MEETING ENGAGEMENT

The movement to contact ends when enemy resistance requires the deployment and coordinated effort of one or more of the brigades. The division has several options:

- Bypass the enemy unit and continue the movement.
- Conduct a hasty attack or defense.
- Conduct a deliberate attack or defense.

The division uses all available collection resources to determine the strength, capabilities, intentions, location, and deployment of the enemy force. Ground-based assets focus on support to close operations while aerial assets look deep for reinforcements and support forces. Jamming focuses on key enemy C^3 nets for maneuver, fire support, and air defense units.

ATTACK

The division attacks under a variety of circumstances. It may attack in a meeting

engagement, against prepared defensive positions following a movement to contact, from defensive positions after defeating an enemy attack, or through another friendly force.

The division commander directs the brigades in attacks against enemy weak areas to gain access to soft targets in the enemy rear. At the same time, he conducts deep attacks to delay or destroy enemy reinforcements, degrade support operations, and create additional opportunities for decisive offensive action. He focuses deep attacks against HPTs to degrade enemy capabilities and reduce the threat to the division's operations.

The division may conduct hasty or deliberate attacks. The primary difference is in the detail of planning and the commitment of combat resources:

- Hasty attacks are hastily planned and executed with resources readily available. The goal is to seize or retain the initiative. Hasty attacks are the preferred means of attacking.
- Deliberate attacks are planned in detail and may be expensive in terms of combat resources. It requires a thorough reconnaissance, detailed situation and target development, and concentration of combat power. It is used against a strong enemy defense.

The division IEW system supports the destruction of the enemy defense by fire and maneuver in the conduct of close operations and the projection of combat power to defeat or stall second-echelon and follow-on forces.

The G2 employs multidisciplined intelligence collection and ESM resources in a coordinated effort and focuses them on the enemy security zone and main defense belt. He also tasks the brigades and the cavalry or reconnaissance squadron to collect needed information within their capability. He directs reconnaissance patrols to the most critical areas of enemy activity. He employs aerial systems including corps, national, and USAF assets; and LRSU teams against deep targets. These resources confirm or refute other information concerning enemy forward defenses—and look deep into the enemy rear for reserves, reinforcing units, and combat support and CSS elements. Interrogation teams determine the composition, disposition, and strength of enemy security, defending, and reserve forces.

SIGINT or EW assets intercept, locate, and collect information and technical data on enemy C^2 and fire support nets. They identify noncommunications emitters associated with specific weapon systems such as missile and air defense systems. They identify and locate enemy REC assets. They selectively jam key enemy C^3 nets at critical times to cause the enemy to use nonsecure communications which are then exploited for information.

The ASPS integrates and analyzes information from all sources to complete the picture of the battlefield and determine the enemy's intentions.

Avoid Enemy Strength

The division attacks enemy defenses at their weakest point, directing the division's strength against enemy vulnerabilities. The commander maneuvers attacking forces around enemy defenses. He maintains sufficient flexibility to exploit enemy vulnerabilities as they develop or are detected.

A detailed knowledge of the battlefield enables the division commander to identify exploitable enemy weaknesses. By knowing the enemy's defensive dispositions, he locates gaps, exposed flanks, and other exploitable weaknesses.

The CM&D section employes a multidisciplined collection operation to gather detailed information about the enemy, weather, and terrain. The IPB data base serves as a basis for the collection operation. The ASPS analyzes the available information from all sources to develop the situation and HPT. It identifies areas where the enemy has concentrated combat power and economized his forces. It passes the results to the commander, staff, and fire and maneuver elements that can exploit it.

Concentrate Combat Power

To succeed in the attack, the division commander must concentrate combat power on a narrow front where the enemy is weak.

do this with acceptable risk, he must ceive the enemy regarding the time, ace, and strength of the attack; cover the aneuver and concentration of forces; and ovide surveillance over areas where onomy of force has been applied.

The division, through an extensive PSEC and deception program, counters emy efforts to collect information about e division and its operations. Multidisci- ined collection assets, the ASPS, the CI alysis section, and the OPSEC staff ele- ent locate and assess enemy collection pabilities. CI and ECM resources conduct d support deception operations in accor- nce with the overall deception plan.

IEW assets are concentrated to support e main effort. Voice collection and EAMPACK teams continue to operate, but cate in an area that facilitates their join- g the supported units in the attack. The EAMPACK system is used to locate emy surveillance radars that are capable locating the concentrating division ces. The TRAILBLAZER system con- ues to operate from dispersed positions. mming during this phase is tightly con- olled. Enemy I&S nets may be selectively mmed to frustrate enemy collection forts; however, jamming of C^3 nets is oided at this time, as this would allow the emy sufficient time to find alternate eans of communications. To avoid reveal- g the location of troop concentrations, mmers operate from dispersed locations.

GSRs provide surveillance over the area the flanks of and gaps between unit sembly areas.

The commander must consider the NBC reat when concentrating forces. The intel- gence effort must focus on identifying and cating enemy nuclear and chemical weap- s and his intentions to use them.

Suppress Enemy Defensive Fires

As division forces concentrate against d assault enemy defenses, they become creasingly vulnerable to enemy fires. ccordingly, maneuver must coincide with ppressive fires against enemy weapon stems.

IEW and FSEs concentrate their efforts in an integrated operation to suppress enemy fire support systems.

Surveillance and SIGINT or ESM systems locate and identify critical fire support radars and communications systems through both physical and electronic signatures. The first priority is to locate nuclear and chemical weapon storage sites and delivery systems.

Ground-based SIGINT and EW systems focus on enemy forward fire support assets while aerial systems, including Air Force and national assets, concentrate on long-range artillery and rocket systems located at greater ranges. They focus on fire support C^3 and target acquisition and fire control radars. They also locate and identify vital elements of the enemy's air defense system that pose a threat to air reconnaissance, close air support (CAS), and battlefield air interdiction.

As fire support systems are located, they are suppressed by indirect fire systems or USAF assets. Those systems which cannot be or need not be physically suppressed may be attacked by ECM assets.

Generate Overwhelming Combat Power

The division concentrates sufficient combat power in the main attack to overwhelm the enemy.

ECM assets are concentrated in the attack area and move with the attack, providing continuous support. Jamming is integrated with fire and maneuver, attacking enemy C^2 and fire support nets.

Multidisciplined IEW assets locate and track enemy reserve forces and HVTs. As they are located, they are reported for suppression by artillery, air strikes, or ECM. Displacement and movement of enemy forces and results of close and deep operations are continuously monitored to detect vulnerabilities that can be exploited.

GSRs move with attacking forces, providing surveillance forward of, to the flanks of, and in gaps between attacking units. They report enemy troop concentrations and enemy counterattack maneuvers.

Sustain the Momentum

Exploitation and pursuit follow a successful assault. They are aimed at the complete destruction of the enemy's defense, his C^2 and support facilities, and his retreating forces. Decisive results are achieved by maintaining the momentum of the attack and keeping constant pressure on the retreating enemy forces.

The IEW system is targeted against enemy C^2 and support facilities, communications centers, retreating enemy forces, and forces capable of counterattacking or establishing new defenses. Ground systems move with the attack, using successive positions or leapfrog tactics. They monitor enemy movement, communications, key terrain, and avenues of approach. Aerial systems assist ground systems in following enemy forces, locating critical communications emitters, and searching the terrain. They also locate enemy reserves, deeply echeloned forces, and HPTs (see the following illustration).

IEW SUPPORT OF OFFENSIVE OPERATIONS

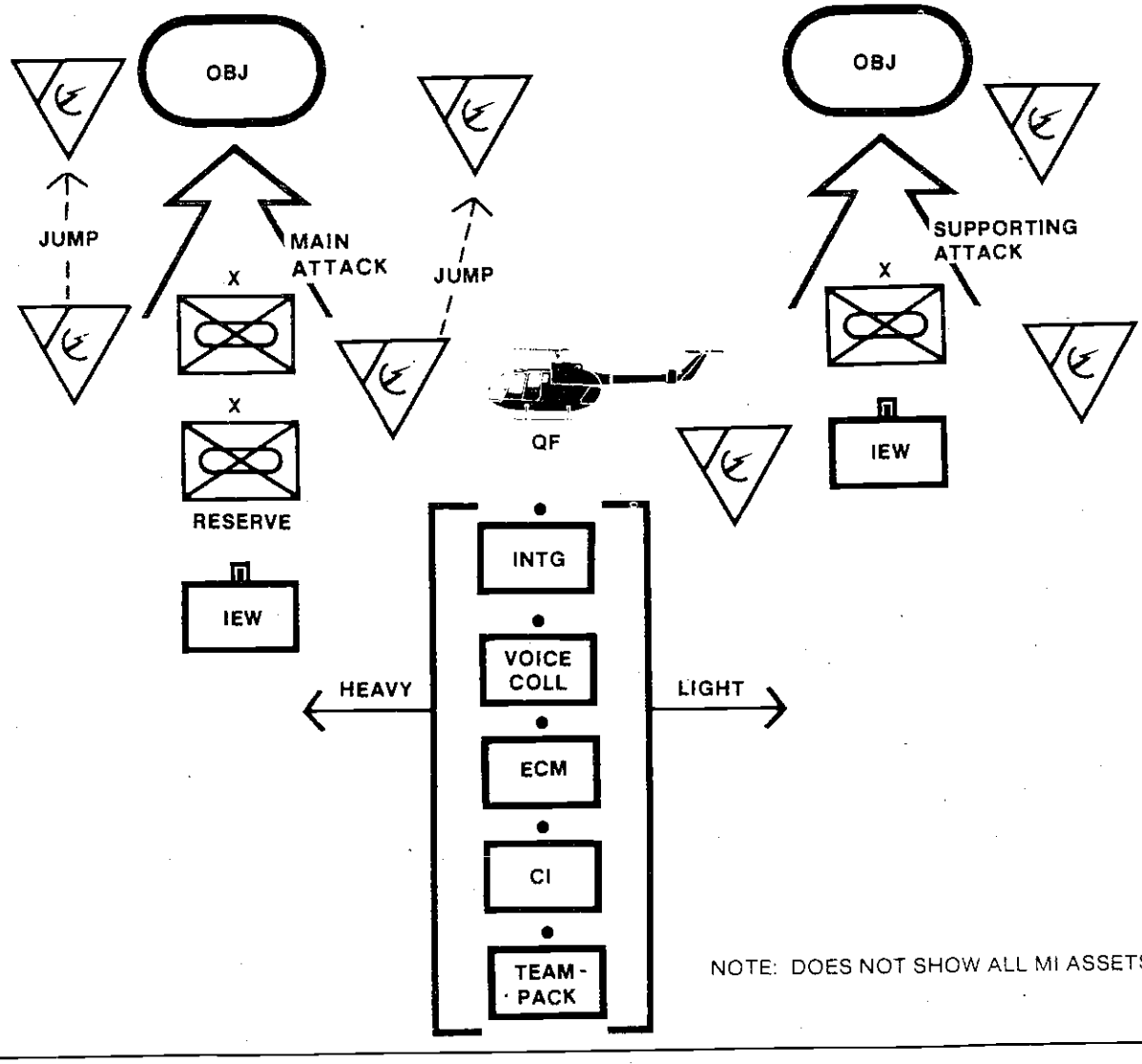

GSRs, moving with the attacking units, etect retreating and counterattacking nemy forces.

Interrogation teams move with the ttacking brigades. They conduct initial nterrogations, primarily for combat infor- nation of immediate tactical value. They ttempt to acquire information concerning nemy locations, strengths, composition, nd capabilities; and the location of key nstallations such as CPs and logistics ncilities.

ECM systems disrupt enemy efforts to naintain C^2, reestablish communications, pass target acquisition and fire control nformation. Ground-based systems focus n enemy units in contact, while aerial sys- ms target deep against enemy reserve rces and support activities. This is a coor- inated effort aimed at destroying the ene- y's defense and his capability to recover.

To sustain the momentum of a successful ttack, continuous support is required. IEW ystems must be flexible and capable of oving with attacking forces. Systems ust be able to operate on the move, or ews must be able to displace their equip- ent quickly. Ground and aerial systems, hich are coordinated and mutually sup- orting, provide for continuous support.

Hide the Main Effort

The division and its subordinate units ake a coordinated effort to conceal and eceive the enemy as to the location of the ain attack. This primarily involves decep- on as well as effective OPSEC. The divi- on's deception operation may be part of a ordinated corps deception operation, or it ay be solely a division operation. Units nduct deception in accordance with the verall division plan. The MI battalion or her division elements may conduct elec- onic deception. Effective OPSEC is vital deception, especially in the area of the ain attack.

COUNTERINTELLIGENCE SUPPORT TO OFFENSIVE OPERATIONS

One of the key IEW principles in the offense is denying the enemy intelligence. A primary element in doing this is CI support to OPSEC. CI supports OPSEC by—

- ☐ Monitoring the friendly force OPSEC posture.
- ☐ Identifying and recommending measures to control friendly profiles.
- ☐ Monitoring and recommending countermeasures.

CI also supports deception operations by identifying the enemy multidisciplined collection capabilities, by recommending activities which should be protected from enemy collection attempts, and by identifying those channels through which false information could be revealed in support of the deception plan.

CI assets isolate key enemy targets of interest for exploitation and neutralization. As the force moves forward into areas previously under enemy control, CI actively seeks out personnel engaged in espionage, sabotage, or subversion against US forces. Close coordination with higher echelons for CI target development is necessary.

CI assets work closely with interrogators in screening local nationals about the situation in front of friendly forces. They also implement CI plans prepared prior to the movement to contact by safeguarding or detaining persons identified on white, black, or gray lists.

INTELLIGENCE AND ELECTRONIC WARFARE SUPPORT TO DEFENSIVE OPERATIONS

The division's defense is a coordinated effort to defeat an enemy attack and prevent him from achieving his objectives. It is a temporary measure conducted while awaiting or creating an opportunity to attack. Defensive doctrine is designed to—

- Defeat superior forces in detail by concentrating combat power to gain local combat superiority.
- Reduce the enemy's combat power by suppressing critical C^2 and fire support systems.
- Destroy the momentum of the enemy attack by disrupting his follow-on forces, combat support, CSS, and C^2 systems. The division must keep enemy follow-on forces out of the MBA until forward brigades defeat enemy assaulting forces.
- Divert the attacker's resources to nonproductive ventures by deception and OPSEC measures.
- Minimize friendly losses through maneuver, speed, surprise, and effective use of terrain.

The key to a successful defense is the concentration of the division's combat power and skillful use of terrain and fire and maneuver. Combat forces maneuver to defeat the enemy's main attack. Economy of force is used in other areas. The defense is active, aggressive, and fast-reacting. Division weapon systems engage enemy targets at maximum ranges. Units in forward battle positions maneuver between various battle positions until the enemy is defeated. Deep attacks against enemy follow-on forces and HPTs support the division and brigade close operations.

The limited number and capabilities of IEW resources do not permit complete and continuous coverage of the entire division AO; therefore, assets are employed in accordance with the division commander's priorities and where maneuver forces have been weighted. They are concentrated in dominant threat areas against HPTs that will have the greatest influence on the battle. The enemy's main attack must be determined early enough to maneuver sufficient forces and weapon systems to defeat it. IPB, which is initiated before and continues throughout the battle, facilitates the effective use of resources. It provides direction as to when and where to use resources to achieve the maximum payoff.

The IEW system produces a continuous flow of information and intelligence about the enemy, weather, and terrain. It locates, identifies, and tracks assaulting forces while identifying the location of the main attack. It locates and identifies key C^2 and fire support systems and exploits them for information, suppresses them by ECM, or hands them off to the FSE for destruction. It locates enemy second-echelon forces and HPTs that can be attacked before they can influence the battle. It frustrates enemy intelligence efforts by determining enemy collection capabilities and recommends OPSEC and deception measures to counter them.

The first priority is to locate and track the enemy's first-echelon forces at extended ranges to delay them and determine where they will make their main effort. The IEW system locates and tracks enemy forces as they enter the division area of interest. It directs sensors to monitor NAI along avenues of approach and mobility corridors that were previously identified through the IPB process. It intercepts and monitors enemy movement and key C^3 nets. It correlates and analyzes information from all sources to determine the direction of the enemy's main effort.

Next, the priority shifts to locating enemy fire support and air defense systems. SIGINT and IMINT resources are used to identify the enemy's overall fire support and air defense capabilities and key target acquisition and fire control systems. His NBC delivery systems are especially critical. As systems are identified and located, they are destroyed or suppressed by fire or ECM. Artillery weapons locating radars are used to locate enemy fire support weapons. Concurrently COMINT and ELINT intercept is used to identify and locate key enemy target acquisition, fire control C^3 centers, and radars.

The first consideration for EW is to protect friendly C^2 communications from enemy exploitation or interference. SIGINT or EW systems locate enemy jammers and target acquisitions systems and pass their locations to the FSE for destruction. Jammers also may screen friendly communications from enemy REC efforts. Jamming operations are integrated with fire and maneuver.

As the assaulting enemy echelon is engaged by defending forces, they are supported by deep attacks directed against enemy follow-on echelons. Deep attacks delay enemy follow-on forces until his assaulting forces can be defeated. They also reduce his combat effectiveness through suppression of critical C^2 and support systems before they can influence the battle. Deep attacks are focused on the destruction of HPTs that promise the highest payoff in terms of reducing the enemy's capability to continue the attack and creating opportunities for friendly offensive action. Typical HPTs in support of defensive operations are—

- ☐ Nuclear and chemical storage sites, delivery systems, and decontamination assets.
- ☐ Key C^2 communications and facilities.
- ☐ Terrain targets along avenues of approach and LOC.
- ☐ Engineering assets.
- ☐ REC assets.
- ☐ Air defense target acquisition and fire control systems.
- ☐ Critical service support activities.

IEW SUPPORT TO THE COVERING FORCE

The covering force serves as a forward security echelon in the defense. It occupies a sector far enough forward of the designated forward edge of the battle area (FEBA) to protect MBA units from surprise, to prevent delivery of medium range artillery fire against MBA units, and to deceive the enemy as to the location of main defensive positions. The mission of the covering force is to gain and maintain contact with attacking enemy forces and to develop the situation.

The covering force may be established with corps or division troops or a combination of units from each. The size, composition, and task organization depends on the factors of METT-T. It is normally tank heavy and reinforced with attack helicopters, field artillery, air defense, and engineering units. MI resources supporting the covering force should be very mobile. Many MI resources deployed initially in support of the covering force will operate in forward defending brigade areas upon withdrawal of the covering force.

The covering force is supported by a full complement of multidisciplined MI resources which are task organized into an IEW company team. The company team will normally be attached to the covering force.

Aerial assets, with their extended range and wide-area coverage capabilities, provide early warning and information about enemy strength, equipment, and direction of movement. They also provide targets in support of deep attacks to delay, disrupt, and weaken the enemy attack.

Reconnaissance patrols and observation posts, supported by GSRs and REMS, track enemy forces as they come within range of supporting artillery. They provide targets and information about enemy strength and fire support systems.

Ground and aerial SIGINT or EW platforms operate against the enemy's C^2, intercepting, jamming, and handing off targets to artillery for destruction in accordance with the commander's priorities. Artillery and air defense radars complement other IEW sensors with target acquisition information, each cuing the other as targets develop.

IEW assets provide continuous support throughout the covering force battle, monitoring the flanks, forward areas, and gaps between units for enemy movement. They provide targets for the FSE and jam enemy C^2 and fire support nets as enemy units deploy, attack, or recover. As the situation develops and units in the covering force are withdrawn, the division commander redistributes IEW resources in support of the deep attack and units in the MBA. LRSU teams may be employed in stay behind operations to monitor enemy movement and other activities.

IEW SUPPORT IN THE MAIN BATTLE AREA

The decisive battle is fought in the MBA. The concept of the defense is to concentrate

sufficient combat power to destroy assaulting enemy forces until the opportunity to seize the initiative and defeat the enemy through bold, offensive maneuvers is achieved. Combat and combat support units are initially deployed along enemy avenues of approach that can accommodate large enemy forces. When the location of the enemy's main attack is determined, forces are shifted to meet the threat. Forces are economized along avenues of approach that will not accommodate large concentrations of enemy forces and in less threatened areas.

The division plans and executes the main defensive battle to create opportunities to gain the initiative through offensive action. Offensive action may be initiated by a single massive counterattack or a series of local counterattacks.

Multidisciplined intelligence assets enable defending commanders to see the battlefield with sufficient clarity to identify and exploit enemy vulnerabilities. MI assets are concentrated on the most critical avenues of approach and against the most critical enemy targets. Their first priority of collection and analysis is to identify the enemy main attack. They also must detect enemy vulnerabilities or weaknesses that the division can exploit. Ground surveillance, interrogation, CI, and ground-based SIGINT and EW teams operate forward in BTF and brigade areas.

MI systems deploy to support the defense in the MBA in accordance with METT-T (see the following illustration). Initially, IPB and the commander's concept of the operation guide the deployment of MI assets. However, the deployment scheme is dynamic, changing with the situation. MI assets deploy where LOS and range capabilities enable them to provide surveillance of the terrain that presents the greatest threat to the defense and where possible opportunities for offensive action can be detected. This may result in a fairly even distribution of IEW assets within the overall defensive sector. This type of deployment is typical when there are multiple avenues of approach into the MBA and are distributed across the defensive sector.

Multidisciplined IEW company teams will normally be organized to support the defense. The company-team scheme of deployment will coincide with brigade boundaries where possible to minimize conflicts in positioning IEW company teams and the necessary coordination with forward brigades. These IEW company teams will be deployed in DS of brigades or GS to the division depending on METT-T planning considerations and the desires of the commander.

Avenues of approach are not often distributed evenly across the defensive sector. For example, a division sector may have a single major avenue of approach. In such cases, the preponderance of MI resources could be deployed to support the main effort in a GS role under the control of the MI battalion TOC. The battalion's SIGINT and EW assets may be task organized into two forward companies and the TOC (HHSC). The battalion (-) is then deployed in-depth, positioned to enhance electronic LOS while taking advantage of natural and man-made features to protect prime mission equipment. IEW assets are task organized into three functional areas. Heavy and light jammers are under the control of the C&J company commander and under the technical control of the three composite T&A teams. Radio intercept, ELINT teams, and DF assets are under the C^2 of the EW company commander and the technical control of its assigned analysis team. The TOC assets are under the C^2 of the HHSC commander, supervised by the S3, with technical control and coordination of SIGINT and EW resources provided by the TCAE. HUMINT resources such as IPW and CI teams may be deployed in GS of the division and receive asset tasking from the MI battalion TOC. GSR squads are attached to forward maneuver brigades and their subordinate task forces and companies based on R&S planning accomplished by the G2. The QUICKFIX platoon, OPCON to the MI battalion, remains under the control of the MI battalion TOC and is employed in a GS reinforcing role. The MI battalion TCAE provides technical control for QUICKFIX operations. Key communications links include command, operations, and technical channels to forward deployed companies, an added EW company analysis team

MI SUPPORT OF DEFENSIVE OPERATIONS

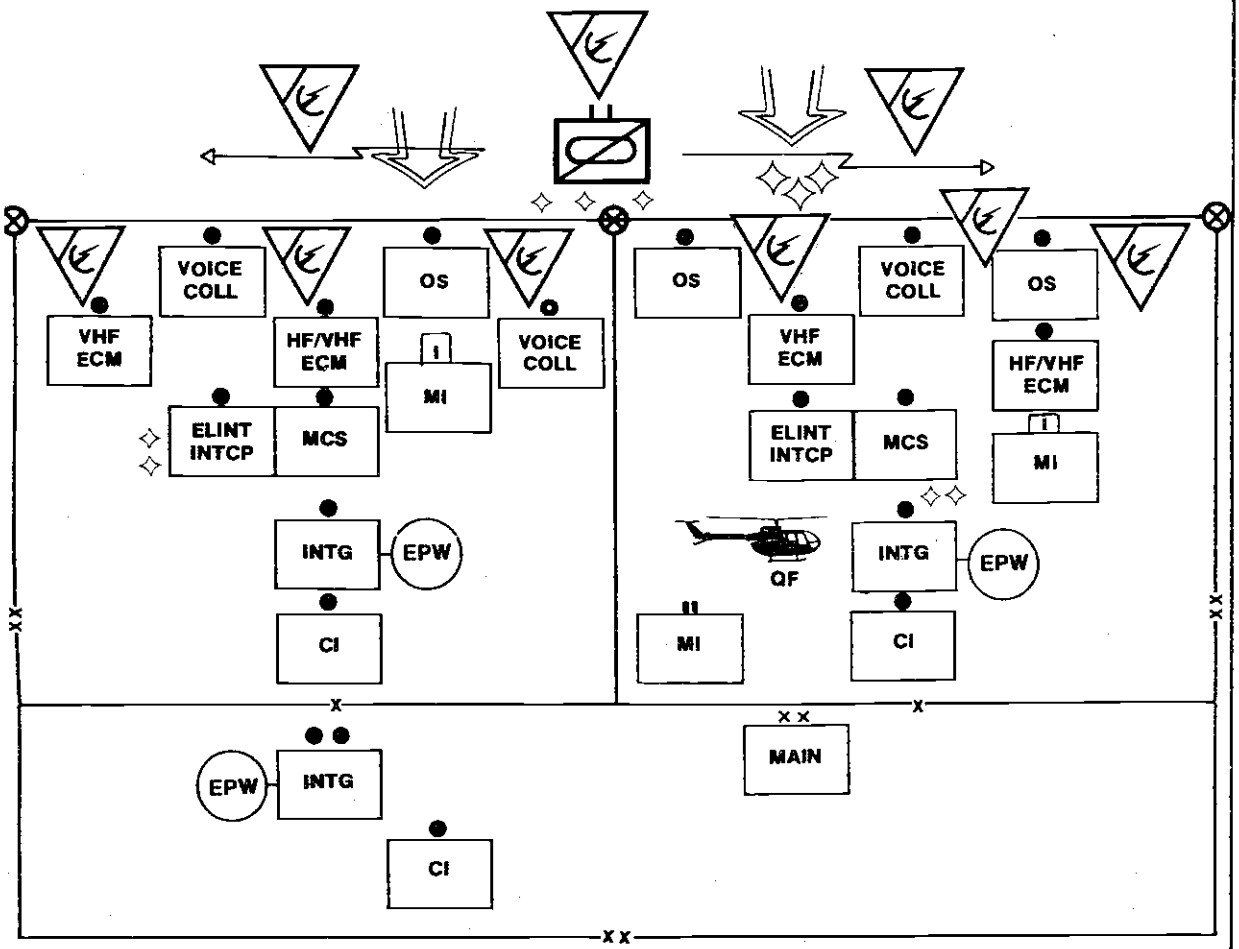

NOTE: DOES NOT SHOW ALL MI SYSTEMS.

"QUICKFIRE" reporting channel to brigades, and the TCAE reporting network (FM) to the DTOCSE. The battalion commander exercises C^2 of all deployed units, less detached elements (for example GSRs), and ensures movement and site occupation are cleared, by the IEWSE, through the appropriate brigade S3 or commander.

While physically consolidating SIGINT collection assets enhances strict control of SIGINT collection operations, it is possible only in tactical settings where the dispersion of SIGINT and EW assets is not dictated by terrain and the threat (see the following illustration).

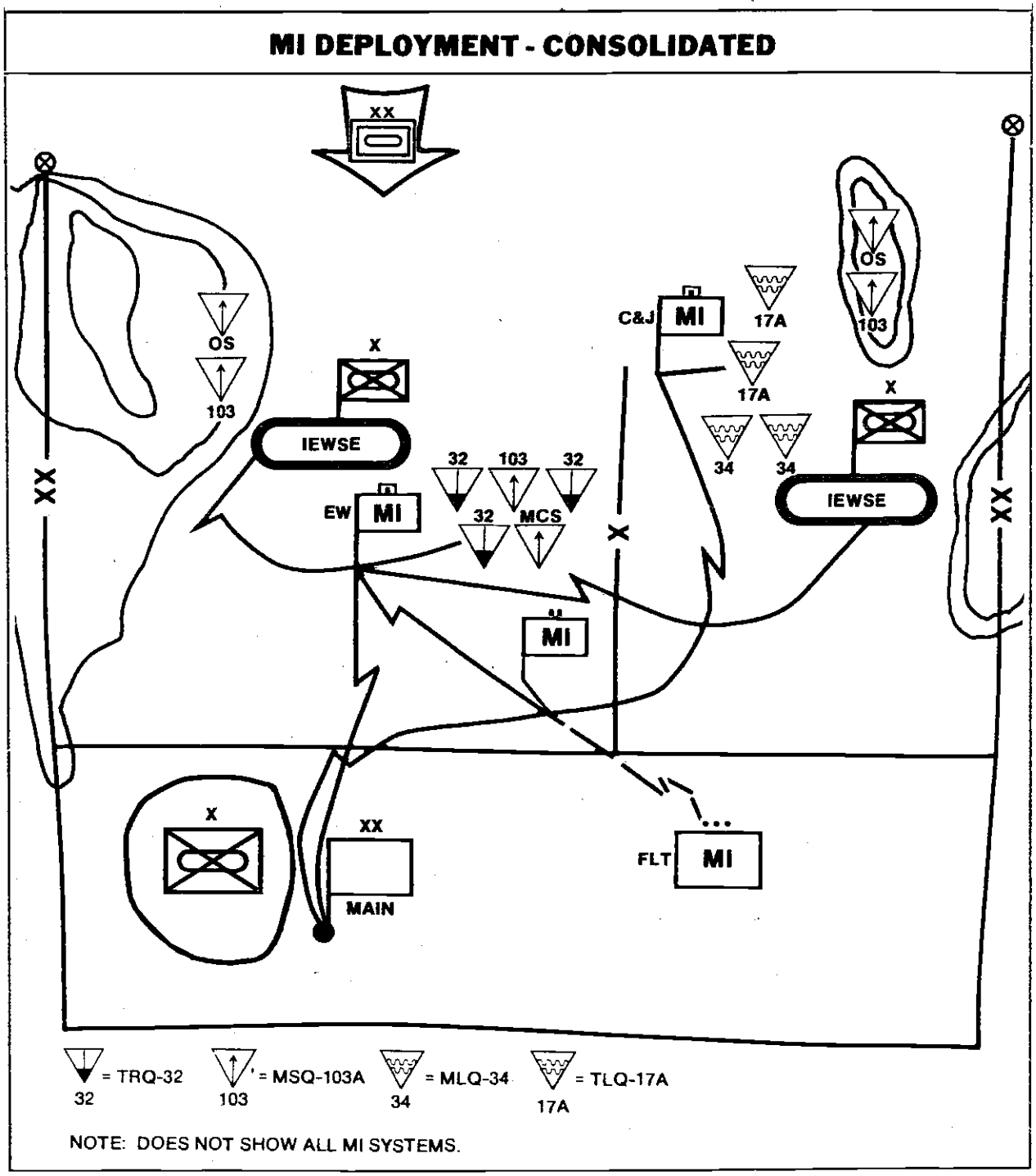

During the battle, the priority of effort is ɔcused on locating critical C^3 nodes, fire ıpport systems, and other critical targets.

Communications intercept teams locate nd identify enemy C^3 nets that control fire nd maneuver forces. The voice intercept ɜams focus on intercept. They report inter-ɛpt data to the T&A team at the C&J pla-ɔon headquarters. The TRAILBLAZER ıtercepts and locates critical enemy com-ıunications nets. The TCAE uses commu-ications intercept and DF data to locate ey enemy C^2 centers and to provide target ata. The flight platoon coordinates with ıe C&J and SIGINT processing platoons ɔ ensure continuous coverage during their isplacement. It also covers areas of the AO ıat are inaccessible to ground-based sys-ɜms due to LOS restrictions.

The TEAMPACK system focuses on ıemy target acquisition and fire control ıdars for artillery and air defense systems.

Targeting data is reported immediately ɔr suppression by maneuver, fire, or ECM. CM assets jam C^2 and fire support nets at ɾitical times during the battle, preferably s the enemy attempts to deploy his forces nd assault friendly forces in the defense. nemy air defense weapons and associated ir defense radars are located and sup-ressed, reducing the threat to friendly air perations.

GSRs are employed with fire and ıaneuver elements to provide early warn-ıg and targets. They focus on avenues of pproach identified during IPB. They also rovide surveillance of gaps in division efense areas and along unit flanks.

OPSEC and deception are also vital to the ıccess of the defense. CI elements assess nemy collection capabilities and actively ıonitor friendly operations to identify vul-erabilities and recommend countermea-ures. Effective OPSEC and deception enies the enemy information about ɾiendly operations and misleads him con-erning the location of defense positions nd intentions of our forces.

Interrogation teams operate at the divi-ion EPW collection point and may operate ɣith the brigades. Additional teams from he corps MI brigade are required to rein-force division assets to provide support to the brigades. The teams supporting the brigades focus on information of immediate tactical value. Those at the division cage focus on the division commander's PIR and IR.

When the enemy offense is impeded and he is forced to change his battle plans, his communications and electronic systems become inceasingly vulnerable to intercept, DF, and targeting. At this point, the use of ECM against enemy C^2 nets becomes increasingly effective.

IEW SUPPORT TO DEEP OPERATIONS

The IEW means available for deep attack are limited. They must be used effectively to obtain the effects desired to gain maximum tactical benefits.

IPB is used to focus intelligence collection and surveillance operations. The presence or absence of predicted enemy activity in the NAI helps confirm or deny estimates of enemy intentions and provides a basis for adjusting the estimate.

The division relies on corps to track enemy forces until they come within range of the division's collection systems. The corps ASPS informs the division ASPS of enemy activity that will affect the division operation. The corps hands off enemy forces to the division as they enter the division area of operations.

The division uses aerial resources and LRSU teams to locate and track enemy forces at extended ranges. Tactical air reconnaissance missions determine enemy strength, weapons and equipment, locations, and direction of movement. They also locate key C^2 and support activities. SLAR locates and determines the direction and the rate of enemy movement. GUARD-RAIL, QUICKLOOK, and QUICKFIX systems identify and locate key enemy radios and radars. Through traffic analysis, the associated unit and key equipment are determined. Long-range surveillance teams determine the type enemy units, their weapons and equipment, their direction and rate of movement, and in some cases, their unit identification. They also identify and locate HPTs.

Through analysis of all-source information, using the IPB data base, the ASPS estimates enemy intentions and develops the data needed to attack HPT.

As HPT are identified and located, they are reported to the FSE for attack by fire, ECM assets, or maneuver forces. Following the attack, the results are assessed. This includes not only the damage to the target itself but the overall effect on enemy combat capabilities. The IEW system monitors the deep operations area throughout the defensive operation to assess the effects of friendly strikes, to support the redirection of assets, and to detect enemy vulnerabilities that can be exploited.

The defense is planned and prepared in as much depth as time and resources permit.

IEW SUPPORT TO REAR OPERATIONS

Protection of the division rear area is vital. This is the area from which supply and maintenance support is projected forward. It also includes administrative activities, division and corps logistic storage areas, and C^3 centers. Because the security of the rear area is so vital to the sustainment of the division's operations, the protection of the rear area is planned with the overall concept of the division operation.

Threat forces operating against the division rear area include agents, saboteurs, and terrorists (level I threat); special operations reconnaissance and strike teams, for example, SPETSNAZ, (level II threat); and conventional military forces including airborne and airmobile forces up to regimental size (level III threat). Primary targets are C^2, special weapons storage sites and delivery systems, and critical support activities.

The G3 integrates the division's rear operational plan with the division's total battle plan. The DISCOM commander or assistant division commander directs rear operations. A rear CP is established to plan and coordinate rear operations. IEW support to rear operations is developed as an integral part of the overall division IEW effort and, like combat resources, are directed to support rear operations based upon preplanned contingency missions.

IPB of the rear area provides the basis for planning the rear operations. It identifies potential enemy objectives in the division rear, landing and drop zones, air and ground avenues of approach, and infiltration routes. It also identifies where division reaction forces can move, shoot, and communicate in the division's rear area.

IEW resources that are dedicated to the rear operations include IEW assets that are organic to rear area units and select MI assets. MI support consists primarily of CI and interrogation resources. Limited GSR support may also be provided. Aerial imagery and EW support may be provided on a mission basis. Corps normally provides additional CI resources to augment division assets.

IEW support of rear operations is a twofold task. First, it denies the enemy information about friendly rear activities. Second, it detects, locates, and supports the neutralization or destruction of enemy threat forces deployed within the rear area.

IEW assets provide close and continuous surveillance of rear area activities to determine their vulnerability to enemy detection and exploitation. CI personnel advise commanders regarding the type of intelligence picture being portrayed to the enemy and conduct active liaison with local police and governmental agencies to identify rear area threat forces.

CI and interrogation assets are targeted against enemy agents, sabotage teams, and local dissidents. Aerial imagery and SIGINT assets are used to detect, locate, and identify airborne and airmobile threats. Because limited IEW assets are available to the division, clear priorities must be established between missions to support rear operations and IEW mission support to close and deep operations. Information collected in support of rear operations is used for OPSEC, fire and maneuver, and then for correlation with other information to determine enemy intentions.

160-850 94 - 5

CI SUPPORT TO REAR OPERATIONS

In addition to being intimately familiar with the hostile threat capabilities in the rear area, CI personnel must be aware of the scheme of maneuver for friendly deployed units and know and understand the commander's rear area support plan.

Upgrading intelligence holdings from reports submitted by all sources plays an important part in providing an accurate picture of enemy intentions for rear area operations. Because the rear area threat is dynamic, CI personnel must continually assess the level of threat and develop and recommend appropriate countermeasures to frustrate or eliminate the threat.

The following illustration depicts CI responsibilities in support of rear operations. Many of those activities associated with terrorism counteraction and the level I threat are ongoing long before the outbreak of declared hostilities. These responsibilities are discussed in detail in FM 34-60 and FM 34-60A.

Liaison with police, civilian and military intelligence agencies, the G5, and civil affairs personnel is a daily function. When hostile rear area operations begin, cooperation between agencies is critical to neutralizing the threat, particularly the level I threat.

Intelligence Preparation of the Rear Battlefield

Rear area IPB reduces uncertainties concerning the battlefield environment and threat in the rear area. IPB identifies potential enemy objectives in the division rear area. Although of slightly different focus than the traditional IPB process, the building blocks of terrain and weather analysis, coupled with the friendly mission, will help identify enemy objectives, landing zones, avenues of approach, and other factors affecting rear operations. CI analysts within the CI analysis section may assist intelligence personnel in the rear CP in developing the detailed IPB of the rear area. IPB plays a key role in the command's efforts to reduce the uncertainties of division rear operations.

Defensive Source Nets

Defensive source nets are established to provide I&W of potential hostile rear area activity and to provide leads for the identification of perpetrators of incidents against

CI SUPPORT TO REAR OPERATIONS

	PEACE	WAR
LIAISON	X	X
REAR AREA IPB	X	X
THREAT AWARENESS TRAINING, SECURITY ADVICE, AND ASSISTANCE	X	X
DEFENSIVE SOURCE NETS *	X	X
INCIDENT INVESTIGATIONS	X	X
CREATE AND UPDATE WHITE, BLACK, AND GRAY LISTS		X
IDENTIFY AND NEUTRALIZE ENEMY TEAMS AND CELLS		X
TACTICAL HUMINT OPERATIONS *		X
STAY-BEHIND OPERATIONS *		X
TERRORISM COUNTERACTION		X
SCREENING AND INTERROGATION	X	X

DESCRIBED IN FM 34-60A

friendly units and personnel. The source nets are composed of personnel who serve as paid or unpaid informants. They are generally local national employees such as barbers, civilian facilities engineers, and others whose access to the military and civilian community may put them in a position to become aware of potential activities against friendly facilities.

Identification and Neutralization

The Identification and neutralization of hostile teams and cells are an important priority in support of the division's rear operations. Information provided by CI personnel is passed to local police, US MP, or combat elements to allow for their capture and detention.

Tactical HUMINT Operations

Tactical HUMINT operations are employed to exploit captured personnel who can quickly identify hostile agents and saboteurs or pinpoint enemy unconventional warfare (UW) team locations, future plans, or weaknesses. Generally, time constraints prevent extensive tactical HUMINT operations against the level III threat; but, enemy agents, sympathizers, and terrorists can often be thwarted at threat levels I and II.

Terrorism Counteraction

CI personnel play a vital role in countering terrorism, particularly in the rear area. Using the analysis of previous terrorist groups and incidents, CI analysts can determine terrorist patterns and recommend measures to prevent future terrorist attacks. CI personnel also can be extremely helpful in collecting information after a terrorist incident occurs.

INTELLIGENCE AND ELECTRONIC WARFARE SUPPORT TO RETROGRADE OPERATIONS

Retrograde operations are movements away from the enemy. There are three specific types—delay, withdrawal, and retirement. Delay operations are used to trade space on the battlefield for time to accomplish some other action. Withdrawal operations are conducted to break contact with the enemy. Retirement operations are conducted to relocate from one position to another without enemy pressure.

In any retrograde operation, intelligence requirements increase. The division commander must know where the enemy's main strength is and where and when he will attempt to mass his combat power to overtake and destroy friendly units. Conversely, the ability to collect information is decreased because collection assets are pulled off line and leapfrogged to the rear to provide continuous support. Aerial platforms may be forced to increase standoff distances or reduce operations due to enemy air superiority.

The division brings the enemy under artillery fire and air strikes at long range. This is designed to deceive him concerning the retrograde operation, cause his deployment, delay him, and interrupt his momentum.

IPB helps the G2 direct collection operations to locate and track the enemy at extended ranges. Corps provides the division with information about the strength, capabilities, and movement of enemy forces within the division area of interest.

As enemy forces come within range of collection systems, the division G2 directs long-range assets to track them. These assets include LRSU teams and the QUICKFIX flight platoon. The G2 also requests USAF tactical air reconnaissance support and SLAR, GUARDRAIL, and QUICKLOOK missions from corps. As first-echelon enemy forces come within range of ground-based systems, they are handed off. Division, corps, and USAF long-range systems shift their focus to locating and tracking enemy follow-on forces.

Ground and aerial surveillance and SIGINT collection assets maintain contact with the enemy and identify HPTs to provide targeting information to the FSE and jammers. The enemy is further delayed by jamming his C^2 and fire support nets.

The IEW system must also detect enemy attempts to outflank and isolate friendly forces. GSR and combat and reconnaissance patrols monitor gaps between units and flank areas. Aerial surveillance sensors provide wide-area coverage to the front, flanks, and rear of friendly forces.

OPSEC and deception measures are used to—

- Deny the enemy information and deceive him concerning our intentions.
- Protect C^3 through use of terrain masking, radio silence, and ECCM to degrade enemy REC operations.
- Deceive the enemy and cover disengaging units through the effective use of weather, terrain, and smoke, and by simulating the continued presence of units until disengagement is complete. Some electronic emitters, such as GSRs, continue to operate in forward areas until the last units withdraw.

EW support of retrograde operations is much the same as support to offensive and defensive operations. The use of ECM remains situation dependent and is continuously integrated with the commander's scheme of fire and maneuver.

The first IEW task in retrograde operations is to locate and track enemy forces. EPW interrogations and low-level tactical HUMINT operations can provide information on the location and movement of enemy forces. Low-level tactical HUMINT can also provide I&W information which supports another IEW principle: determining when and where the enemy will attempt to mass combat power and overtake and destroy the friendly force.

OPSEC and deception are essential to the successful conduct of retrograde operations. CI supports OPSEC by assisting the G3 in identifying those critical friendly activities that must be protected to keep the enemy uncertain as to the time and place of actual disengagement. CI supports deception by identifying the enemy collection means which are most likely to be targeted against our forward deployed forces and those which would be vulnerable to deception operations.

CI operations must be compatible with the courses of action taken by the supported combat unit.

In conjunction with the MP and host-nation forces, rigid controls over civilians and refugees must be applied to detect persons posing a threat to the security of friendly operations.

INTELLIGENCE AND ELECTRONIC WARFARE SUPPORT TO COMBINED ARMS OPERATIONS

The combined capabilities of division surveillance, target acquisition, and weapon systems are impressive. They provide the commander with the means for winning the air-land battle. They are capable of providing effective EW support in various battlefield environments and threat scenarios. But if victory is to be attained, the potential of these systems must be fully exploited through their integrated operation. They must effectively engage the enemy wherever he is, from the rear boundary, to the forward limits of the area of operations.

The IEW system enables commanders within the division to achieve the full potential of combat power. Through this system, they see the battlefield and deliver their forces and weapons against decisive targets. They attack the enemy's C^2, degrading his ability to deliver his combat power for decisive results; and they achieve the tactical advantage of surprise.

The IEW system is dynamic. It changes in response to new demands or requirements to support new missions. It moves with the battle and covers every corner of the battlefield. It interacts with every element of the combined arms team and is an integral part of every combat function.

CHAPTER 6

Combat Service Support

CSS feeds, fuels, maintains, and moves the MI battalion. It provides this support as far forward as possible and throughout the AO. This chapter describes those CSS functions that the MI battalion provides to its elements and the CSS provided to the MI battalion by the DISCOM and other divisional units.

COMMAND AND CONTROL

The MI battalion commander exercises control of his CSS system through the battalion executive officer (XO). The battalion XO performs overall staff supervision of MI battalion CSS. The battalion XO, with the assistance of the S1 and S4, coordinates the administrative and logistic activities needed to maintain continuous support for all MI battalion elements.

The S1 is responsible for personnel and administrative support. FM 101-5 contains a complete list of S1 tasks.

The S4 is the principal staff officer responsible for developing the battalion's CSS plans, policies, and programs.

The following illustrations outline the duties of the battalion S4 and his interface with the other staff elements.

Each MI company commander is responsible for the service support activities of his company when task organized with these assets. He supervises the administrative and logistical activities of company elements in the company CP and those in GS roles. He ensures that company elements deploying forward are supported fully until they reach the maneuver unit. If company elements are deployed on an individual basis in the maneuver unit's area, the commander monitors the element's service support status through the MI unit platoon leaders and the IEWSE. When an IEW company team is formed, the IEW company team commander assumes this responsibility.

INTERFACES AND DUTIES OF THE BATTALION S4

AREA	S4 (LOGISTICS OFFICER)	S1 (PERSONNEL OFFICER)	S2 (INTELLIGENCE OFFICER)	S3 (OPERATIONS AND TRAINING OFFICER)
MAINTENANCE	● Monitors maintenance operations and equipment status. ● Confers with battalion maintenance officer, motor officer, communications officer, and materiel readiness officer. ● Reviews unit status reports and materiel condition reports. ● Makes materiel condition assistance visits to battalion maintenance elements. ● Makes spot check inspections. ● Prepares the logistics portions of the unit status report worksheet. ● Supervises maintenance program. ● Reviews prescribed load list and record of demands for repair parts. ● Has staff responsibilities for recovery and repair of battalion vehicles and equipment. ● Monitors the distribution and storage of repair parts and maintenance supplies. ● Identifies maintenance problem areas. ● Ensures accurate maintenance records are maintained. ● Establishes maintenance priorities. ● Coordinates external maintenance support with the S3. ● Determines adequacy of maintenance training.	● Coordinates with the S4 to replace maintenance lost through personnel turnovers.		● Consolidates unit status reports. ● Coordinates with S4 on the inclusion of maintenance training in training programs.
ADMINISTRATION	● Writes or updates S4 sections of the garrison SOP. ● Prepares the service support paragraph or annex to the operation plan or order. ● Prepares logistical fragmentary orders. ● Makes logistics status reports at required intervals. ● Monitors spending, particularly spending for class II and IX items. ● Submits work requests to DFAE. ● Coordinates self-help program. ● Reports quarters usage. ● Advises other staff officers on required or recommended changes to section II (Personnel Allowances) and section III (Equipment Allowances) of the organization's MTOE/TDA (TAADS). ● Ensures that all logistic activities have needed publications on hand and coordinates with the S1 for shortages. ● Determines training requirements for logistics personnel and coordinates time, place, and materials required. ● Prepares correspondence for command signature when replacements and training are needed. ● Coordinates the timely correction of deficiencies in visitor or assistance reports.	● Operates the PAC. ● Maintains personnel daily summary. ● Processes SIDPERS reports. ● Maintains personnel records and assigns replacements according to MOS and unit requirements. ● Monitors sick call rates, AWOL rates, and disciplinary actions. ● Provides guidance on and processes recommendations for awards, decorations, and personnel actions. ● Maintains policy and administration files and records. ● Provides message and distribution center. ● Monitors the organizational safety program. ● Coordinates with the S4 on supply and maintenance personnel required before submitting changes to section II (Personnel Allowances) of organization's MTOE/TDA.	● Prepares and processes personnel security clearances.	● Prepares operations orders. ● Prepares operations estimates. ● Monitors training programs of assigned or attached units. ● Prepares training schedules and maintains training records. ● Coordinates with the S4 before submitting changes to section III (Equipment Allowances) of the organization's MTOE/TDA, to include writing justifications for these changes.

INTERFACES AND DUTIES OF THE BATTALION S4 (Continued)

AREA	S4 (LOGISTICS OFFICER)	S1 (PERSONNEL OFFICER)	S2 (INTELLIGENCE OFFICER)	S3 (OPERATIONS AND TRAINING OFFICER)
SUPPLY	● Advises other staff officers and assists them in the area of supply. ● Monitors the request, acquisition, storage, and distribution of supplies, except for class VIII (medical) and class IX (repair parts) items. ● Checks the organization and installation property books and confers with the PBO. ● Reviews adjustment documents and confers with the PBO and survey officer (on reports of survey), the unit commanders (on statements of charges), and the finance officer (on cash collection vouchers). ● Reviews requests for supplies and confers with the PBO and motor officer. ● Checks requests for expendable supplies; confers with unit commanders, PBO, and self-service supply center personnel; and administers distribution. ● Checks due-in status file and confers with the PBO, division support officer, and maintenance officer. ● Checks document register and document file. ● Assists units which have supply record problems. ● Prepares forecasts and maintains data on use of class III (petroleum) items. ● Gives guidance on disposal of salvage and excess. ● Keeps records of shortages of MTOE equipment. ● Coordinates with the S3 for SQT training for supply personnel.	● Coordinates with S4 to replace supply personnel lost through turnovers. ● Provides S4 with unit strength data. ● Is responsible for publication pinpoint distribution system. ● Requests religious supplies.	● Monitors overall physical security program. ● Monitors security of classified material.	● Decides prescribed load for equipment and supplies. ● Coordinates with the S4 on inclusion of supply training in the training program to include preparation for SQTs.
SERVICE	● Inspects dining facilities. ● Monitors food service operations. ● Checks daily ration requests. ● Makes sure troop issue subsistence officer is kept informed of training exercises and subsistence support required. ● Serves as the contract officer's representative in food service areas when required. ● Arranges for the receipt, storage, issue, and direct exchange of organizational clothing and equipment when no CIF has been established. ● Inspects organization clothing and equipment records and confers with the PBO, unit commanders, CIF personnel, and clothing sales store personnel. ● Directs the processing of unit laundry. ● Arranges for possible training sessions on laundry payroll deduction procedures and the clothing monetary allowance system. ● Advises on salvage operations.	● Provides mail service. ● Processes leaves, passes, and rotations. ● Coordinates religious, legal, and financial services. ● Plans and supervises current death program. ● Coordinates medical support.		
	● Supervises administrative movements. ● Coordinates transportation for services and supplies. ● Serves as movement officer for battalion headquarters; makes loading plans and checks to make sure plans cover current MTOE equipment. ● Helps units make loading plans, especially for road or air movements. ● Requests transportation from other units for battalion when needed. ● Coordidates with DIO on overseas and local movements.	● Coordinates use of MPs for traffic control and discipline. ● Resolves personnel problems resulting from proposed move.		● Gives S4 requirements for transportation for training exercises. ● Publishes movements order. ● Plans for movement of the battalion, coordinating routes with the S4.

The company first sergeant assists the ompany commander in matters pertaining ɔ administrative and logistical support. He nd the company supply sergeant maintain lose and continuous coordination with the attalion S4 and appropriate elements of he headquarters and service company. 'hey ensure continuous supply support to ompany elements at the company CP and ɔ those company elements deployed in the rigade and division sectors. The service upport section leader, when attached to the ompany, is also responsible for providing ıaintenance support to company elements. Ie is also prepared to provide maintenance upport to those company elements which re deployed throughout the company's rea of deployment.

Individual platoon leaders of deployed eams must make frequent visits to team ɔcations to ensure that adequate service upport has been received from the supported unit.

When IEW company teams are formed nd deployed, the IEW company team ommander coordinates the CSS requireıents of his unit. These support requireıents are generally stipulated in the logis.cal annex of the OPORD and are coorinated between the MI battalion and ıaneuver units. Most CSS requirements are ıet by the MI battalion or by DISCOM lements located in the brigade support rea.

COORDINATION

The MI battalion S4 is responsible for oordinating CSS, particularly for deployıg and deployed MI elements. As soon as ıe battalion is notified that MI assets are eing deployed within the division and briade AOs, preliminary coordination is ıitiated. The MI battalion S4 notifies the ivision G4 of the planned deployment and oordinates with the G4 and DISCOM to ıeet the anticipated CSS requirements of ıese elements. These anticipated requireıents will be outlined in the logistical por.on of the OPORD. The MI battalion S4 lso coordinates anticipated CSS requireıents with the brigade S4.

IEW system's unique maintenance is provided by the MI battalion. The IEW company team commander coordinates with the brigade S4 for additional maintenance. Other additional requirements may be satisfied by supported brigade or BTF maintenance assets or by the intermediate (DS) maintenance company of the forward support battalion (FSB) of the DISCOM.

FOOD SERVICE

During combat operations, soldiers subsist on combat rations. To meet this need, battalion vehicles carry a 3- to 5-day supply of rations. Actual supply requirements are determined in the battalion and company SOPs. When circumstances permit, the battalion establishes one field dining facility for the preparation of hot meals. The dining facility usually is placed within the MI battalion trains area. This dining facility will support all battalion elements located at the battalion trains and battalion TOC locations. Rations are normally issued based on initial input provided by the food service sergeant to the class I point.

Food service support for deployed MI units is coordinated between the MI battalion S4, the IEW company team commanders, and the brigade and maneuver battalion S4s. Before MI elements are deployed, the MI battalion S4 initially coordinates anticipated food service requirements with the division G4, brigade, and maneuver battalion S4s.

The IEW company team commanders submit daily strength reports to the MI battalion S1 for consolidation. The consolidated report goes to the division G1 section. The division materiel management center (DMMC) also receives a copy of this report. The DMMC coordinates the flow or rations to class I supply points. The MI battalion food service section uses organic vehicles to move rations from the supply point to the established dining facility site. The IEW company team commander draws rations from a class I supply point established in the brigade support area. These rations are held at the IEW company team headquarters until they can be distributed to MI elements within the company team.

MI elements operating in support of maneuver battalions (or who are deployed in a maneuver battalion's AO) also draw rations based on their daily strength reports. They report this information to the IEW company team commander. The IEW company team commander consolidates these reports and passes them to the brigade S4 and the MI battalion S1. Designated MI representatives draw these rations from the battalion supply point and deliver them to the using MI units.

SUPPLY

Supplies are those items required by the battalion to support and sustain its personnel, maintain its equipment, and conduct its operations. Supply operations involve the process of determining requirements and requesting, obtaining, storing, and distributing items to fill needs.

In peacetime, units of the MI battalion stock combat-essential supplies according to unit SOP. These supplies are designed to sustain combat operations until the wartime supply system is operating. Examples of supply items that units take into battle are ammunition, combat rations, and repair parts.

Once the wartime supply system is established, distribution takes several forms. ***Supply point distribution*** requires the requester to pick up supplies at the supply point and transport them to the unit in organic vehicles. ***Unit distribution*** entails direct delivery of requested supplies to the requester, for example, the unit. ***Throughput distribution*** delivers supplies as close to the user as possible, bypassing intermediate points and normally is restricted to nonstockage list items brought directly from corps theater support units. MI battalion personnel are authorized from the battalion and IEW company team headquarters to pick up supplies from established division distribution points. When the unit supply method is used, supplies are delivered directly to the requesting unit by a supporting supply unit from the main support battalion and forward support battalions of DISCOM. Throughput distribution seldom is used by the MI battalion.

CLASSES OF SUPPLY

Supplies are grouped into ten classes, or major categories, so that items may be readily identified. This establishes a common supply terminology and eases logistical planning and operations. Nine of the ten classes of supply are outlined in the following chart.

Class I

The MI battalion's HHSC, food service section, draws rations from a distribution point in the division support area for the battalion's field dining facility. Whenever possible, potable water is also provided at the same supply point. The food service section uses organic water trailers to move water from the supply point to the dining facilities or to points designated by the MI battalion S4.

IEW company teams operating in support of or with committed brigades coordinate with the brigade for food service support. The IEW company team arranges to draw rations from the class I supply point that is set up in the brigade support area. Other MI elements operating in support of maneuver units coordinate with and draw rations from the maneuver unit's designated supply points, unless other arrangements through battalion and brigade S4 coordination have been made. Deployed elements normally keep a 3- to 5-day ration supply in their vehicles or at their tactical position.

When individual MI units are deployed to the brigade or BTF AO, the MI unit leader must coordinate class I support with the nearest combat unit.

See FM 34-80 for more information on CSS in the brigade and battalion AO.

Class II, III (packaged), IV, and VII

These supply classes are provided by the supply and service company of the main support battalion (MSB) in the division support area and the support FSB supply companies in the brigade support area (BSA). Requests originate at the company level and flow through the battalion S4 section, through the supply companies to the DMMC. MI battalion company teams draw

SUPPLY CLASSES

SUPPLY CLASS	DESCRIPTION
I	Subsistence items and gratuitous issue health and welfare items: C-rations, fresh vegetables, sundry packs.
II	Items of equipment, other than principal items, which are prescribed in authorization/allowance tables: individual equipment, clothing items, tentage, tool sets, administrative and housekeeping supplies.
III	Petroleum, oils, and lubricants (POL): petroleum fuels, hydraulic and insulating oils, chemical products, antifreeze compounds, compressed gases, coal.
IV	Construction and barrier materials: lumber, sandbags, barbed wire.
V	Ammunition: small arms ammunition, artillery rounds, hand grenades, explosives, mines, fuses, detonators, missiles, bombs—includes special ammunition (chemical and nuclear rounds).
VI	Personal demand items; items which would normally be sold through exchange system: cigarettes, candy, soap.
VII	Major end items; final combinations of items which are ready (assembled) for intended use: vehicles, self-propelled artillery pieces, missile launchers, major weapons systems (the weapon itself—not including the crew).
VIII	Medical material: medicines, stretchers, surgical instruments, medical equipment, repair parts.
IX	Repair parts and components, including kits and assemblies, items required for maintenance support of all equipment: batteries, spark plugs, axles.

NOTE: The MI battalion uses nine of these ten classes. The tenth class of supply is for all nonstandard items. Since the MI battalion does not use these items, distribution and a description of these categories have been omitted. For further information on classes and subclasses of supply, see FM 704-28.

from the MSB in the division support area (DSA) and from the FSB in the BSA. IEW company teams operating in the brigade AO coordinate with and receive support from DISCOM elements of the BSA. Supplies are issued by elements of the DISCOM organized into an FSB. The FSB is tailored to provide DS to the brigade and to MI units supporting the brigades or deployed in the brigade AO.

Class III

Class III supplies are replenished through a process of informal requisition, allocation, and distribution. The initial additional allocation of POL is usually based on consumption experience records which are consolidated and maintained by the MI battalion S4. Other factors which must be considered when preparing a POL estimate is the duration of deployment and the trafficability of terrain.

The MI battalion S4 uses this information to prepare an estimate of POL requirements for MI battalion elements and for future planning purposes. He supplies the DMMC with these estimates. He also coordinates POL requirements for MI elements to be deployed in the BTF AO with BTF S4s through the brigade S4. This ensures that adequate POL is on hand and available for all MI elements wherever they are deployed.

All MI battalion vehicles use the nearest fueling point to refuel or to secure POL for transport to the unit area for fueling, lubricating, and oiling generators and vehicles not free to travel. Those that cannot move to a POL point, because the situation demands they remain in place, may also be refueled by organic tankers within the MI battalion or by hand pump from fuel drums. Equipment in remote locations not serviced by roads may have to be fueled from 5-gallon cans delivered to the site by helicopter or backpack. Oil and lubricants are picked up at fueling points, whenever required.

Class V

The MI battalion's requirement for class V consists of basic load for individual and crew-served weapons. Resupply requirements are based on consumption of this basic load. MI elements draw resupply of class V based on their location within the division area. Requirements for company teams located within the forward brigade areas will be consolidated with the nearest maneuver unit S4 and drawn from that unit. MI battalion elements in the DSA will submit requirements to the MI battalion S4. The S4 will submit requirements to the division ammunitions officer and the MI battalion will draw class V from the corps ammunition supply point or division ammunition transfer point as designated in the logistics annex of the OPORD.

Class VI

Class VI covers personal items usually sold through the corps support command (COSCOM) post exchange (PX). When a PX is not available, requests for these items are submitted by the S1, through administrative channels to the G1 for procurement.

Class VIII

Medical supplies are issued to the MI battalion to replace or supplement expended items on an as-needed basis. Medical services and supplies are provided to MI battalion elements operating at the battalion TOC and battalion trains areas by the nearest division medical unit.

MI elements deployed in a brigade AO receive class VIII items from the nearest medical unit. These items are usually limited to replacements or as supplements to items from personal or vehicle first-aid kits. Casualties are evacuated to the nearest medical facility when ambulatory. For those injured who cannot be moved by the unit, medical evacuation (MEDEVAC) is arranged.

Class IX

Specialized repair parts are critical for effective IEW maintenance support. Unlike repair parts support for high-density common items, support for IEW systems such as TEAMPACK and ECM sets is limited because of the low density of such equipment. Therefore, it is essential that repair parts support be closely monitored by the MI battalion commander and his logistics staff. This monitoring begins before combat

and is a continuous process. The battalion must have on hand or on order a prescribed load list (PLL) of repair parts, as authorized by the commander. Maintenance is predicated on the principle of on-site repair and return to operational status with the least possible delay. Repair parts for MI-peculiar equipment are requisitioned by the lowest level authorized to conduct that repair. In most cases involving MI-unique systems, DS, and sometimes intermediate (GS) maintenance is performed by the MI battalion's service support element within the HHSC. In such cases, the MI battalion S4 section submits spare parts requisitions to the supply support activity (SSA). The SSA, if unable to satisfy these requisitions, passes them to the corps MMC which authorizes the release of parts from the intermediate (GS) supply unit in the corps support group.

Deployed MI elements receive maintenance and repair parts support from the battalion maintenance section organic to the MI battalion. When MI units are task organized into IEW company teams, maintenance elements are also task organized and included in the company organization. Through coordination with brigade S4, forward-deployed MI elements also may receive common equipment repair parts support from division or brigade foward-deployed intermediate (DS) maintenance units.

OTHER SUPPLIES

MI battalion elements require water for drinking, sanitation, and food preparation. Elements of the COSCOM and DISCOM locate and develop water sources in the combat zone and establish water points. MI units draw water from the nearest water point or class I supply point and transport it to the unit in either 400-gallon bladders or in 5-gallon water cans, depending upon available resources and the combat situation. Deployed MI elements often rely on the nearest tactical unit's supporting water point for potable water. Water is a free issue item, but may be rationed depending on the tactical situation.

Bath and laundry services are normally established with clothing exchange activities. DS supply units supporting brigades and the division provide laundry, shower, and clothing exchange services.

Map coverage of present and projected AOs is critical to effective tactical operations. Responsibility for the storage and issue of maps rests with the DISCOM supporting the division. The G2 and subordinate unit S2 determine unit requirements for maps. The MI battalion S4 establishes a map supply account at the DISCOM storage site for requesting and issuing maps in support of MI battalion operations. The field SOP will stipulate basic load map requirements. The S4 draws these maps from the DISCOM storage site through a map supply account established with the storage site.

MAINTENANCE, REPAIR, AND RECOVERY

Maintenance is defined as all actions necessary for retaining or restoring an item to a specified condition. It includes inspection, testing, servicing, classification as to serviceability, repair, rebuilding, and reclamation. It also includes all maintenance related supply actions. The term maintenance includes all repair actions necessary to keep a military force in condition to carry out its mission.

The categories of maintenance under the Army's three-level maintenance concept consist of unit, intermediate, and depot maintenance:

- UNIT: User maintenance, which is characterized by quick turnaround based on repair by replacement and minor repair (adjust, clean, lubricate, tighten).
- INTERMEDIATE: Intermediate maintenance is organized into DS and GS elements. DS is characterized by high mobility, a forward orientation, and repair by replacement. Intermediate GS maintenance is characterized by semifixed facilities. Its fundamental purpose is to support the theater supply system through repair of components.

- ☐ DEPOT: Maintenance at this level will support the supply system. It is production-line oriented and is performed by special repair activities, Army Materiel Command (AMC) depots, and contractor personnel.

Though each category is separate and distinct, there are times when a shop performs more than one category of maintenance. The maintenance allocation chart (MAC) remains the primary tool for assigning specific tasks which can be performed at each category of maintenance. The following chart describes each level of maintenance and who performs that maintenance.

Maintenance operations during combat operations are guided by the mission and the situation. Equipment repair is accomplished as far forward as possible. If the repair can be done without moving the equipment, contact teams do the work. The contact team only performs the work necessary to keep the equipment operating. Other maintenance is deferred until after the battle.

VEHICLES, AIR CONDITIONERS, AND POWER GENERATORS

Vehicles, air conditioners, and power generators make up the bulk of items known as common equipment. In the MI battalion, the mechanical maintenance platoon of the HHSC provides unit maintenance for this equipment. The platoon assets form maintenance support teams to be attached to the MI companies and meet their forward repair requirements.

LEVELS OF MAINTENANCE

TYPE OF EQUIPMENT	UNIT	INTERMEDIATE MAINTENANCE DS	INTERMEDIATE MAINTENANCE GS	DEPOT
COMMON EQUIPMENT	HHSC MI BN	DISCOM	COSCOM	AMC CONUS/HNS
C-E EQUIPMENT	HHSC MI BN	DISCOM	COSCOM	AMC CONUS/HNS
COMSEC EQUIPMENT	HHSC MI BN	HHSC MI BN, DISCOM	CORPS CLSU	AMC CONUS/HNS
RADIAC EQUIPMENT	HHSC MI BN	MAINT CO (TMDE) DIV SIG BN	MAINT CO (TMDE) COSCOM	AMC CONUS/HNS
SIGINT/EW EQUIPMENT	HHSC MI BN	HHSC MI BN	COSCOM (SIGINT/EW EQUIP REPAIR TM (GS)	AMC CONUS/HNS
GSR EQUIPMENT	HHSC MI BN	DISCOM	COSCOM	AMC CONUS/HNS

ntenance support teams perform unit enance on MI battalion equipment ved in the brigade areas. They repair uipment on site whenever possible. nediate (DS) maintenance support (MST) of the FSB may be placed the OPCON of the forward area sup- oordinator (FASCO) of the supported le. Additional maintenance is avail- rom the nondivisional intermediate aintenance battalion which will pro- orps back-up maintenance support.

ntenance and repair parts support are y related. Each unit carries its manda- ombat stockage class IX repair parts ombat but must rely on maintenance for repair parts support. In most the unit that provides intermediate naintenance also provides repair parts rt.

MUNICATIONS-ELECTRONICS EQUIPMENT

C-E or IEW maintenance section of HSC provides unit and intermediate aintenance for MI battalion SIGINT equipment. It performs unit mainte- on standard C-E and COMSEC Intermediate and DS maintenance E and COMSEC items is performed by [SCOM. The C-E or IEW maintenance n maintains a shop stock or repair for the MI battalion in accordance AR 710-2, DA Pam 710-2-1, and the ander's policy.

battalion's forward contact mainte- teams provide maintenance support ployed MI battalion elements. Addi- support—up to intermediate (DS) enance—remains with the battalion C-E or IEW equipment repair section.

t maintenance for SIGINT and EW nent is performed on site, if possible, forward contact maintenance team. cannot repair it, it is recovered to the ttalion trains area and repaired by E or IEW maintenance section. The ttalion provides intermediate (DS) enance support for this equipment. If I battalion cannot repair it, it is r evacuated to a COSCOM interme- GS) maintenance battalion repair y.

RECOVERY AND EVACUATION

When on-site repair of MI battalion equipment is not practical due to the tactical situation, the damage involved, or the nonavailability of mobile maintenance teams, and when recovery cannot be performed at the platoon level using self-recovery or similar equipment, the HHSC will provide special purpose equipment from the MI battalion trains to perform recovery operations. Recovered equipment will be relocated to a unit maintenance collection point, intermediate forward maintenance collection point, or to the brigade support area where damage can be assessed and the repair level can be determined.

Recovery may also be conducted to retrieve enemy material found on the battlefield which might be of intelligence use. The HHSC has the primary responsibility for this recovery of enemy equipment captured by MI battalion elements.

Recovered equipment which cannot be repaired at the unit or intermediate DS level will be evacuated to the intermediate (DS) forward maintenance unit. Evacuation is used to expedite movement of disabled equipment to an activity or maintenance level where repairs can be made.

Before evacuation, the maintenance officer considers a controlled exchange of parts according to regulation and command guidance. Systems which have suffered excessive damage may be used as a source for repair parts.

Aviation unit maintenance (AVUM) responsibilities for QUICKFIX rests with its parent unit, the CAB. Unit-level repair of EW systems on the QUICKFIX aircraft is performed by military occupational specialty (MOS) 33R personnel assigned to the QUICKFIX flight platoon. 33Ts of the MI battalion are responsible for intermediate (DS) maintenance of SIGINT and EW systems on board these aircraft. Since QUICKFIX is under the OPCON of the MI battalion, if an aircraft is downed during a mission, the MI battalion S4 is responsible for notifying the CAB to initiate recovery operations.

AVIATION MAINTENANCE

Maintenance of the QUICKFIX aircraft and associated equipment presents a two-fold situation: the EW mission equipment maintenance and maintenance of the aircraft, avionics, and aircraft support equipment. All QUICKFIX mission equipment can be maintained within the Army maintenance system and is designed with many self-test features to simplify the organizational maintenance concept. The aircraft and types of equipment in QUICKFIX are such that the levels of maintenance performed, and the organizations which will provide the maintenance, vary with the equipment types being considered.

QUICKFIX mission equipment is designed with many built-in test equipment features which assist in isolating the cause of equipment malfunctions, thus limiting maintenance downtime. Intermediate (DS) maintenance on EW systems will be performed within the MI battalion. Unit maintenance on all QUICKFIX subsystems is performed within the QUICKFIX flight platoon of the CAB. Unit maintenance includes performing preventive maintenance, making external adjustments, and making repairs which do not require internal adjustments or system alignments.

Intermediate (DS) maintenance performed by the MI battalion for EW systems is characterized by replacement and repair of modules which can be accomplished by using test, measurement and diagnostic equipment (TMDE) and performing module fault diagnosis, inspection, test, adjustment, calibration, alignment, and repair functions.

GS-level maintenance will be performed at the corps C-E-level maintenance battalion using automatic test equipment (ATE). GS maintenance will encompass quick-reaction maintenance support to the DS facilities through use of direct exchange (DX) modules. GS maintenance will include module fault diagnosis, testing, adjustment, calibration, repair, and alignment functions that can be efficiently done using ATE.

The depot will repair or rebuild printed circuit boards, assemblies, and subassemblies that are beyond the capability of GS-level maintenance. Maximum use of MST from the depot will be used at both the DS and GS levels to facilitate rapid repair and replacement of malfunctioning parts.

There is no maintenance facility at the organizational level which is tailored specifically for the QUICKFIX system. Most items of mission equipment are in the Army inventory and can be maintained by standard maintenance facilities. Several unique pieces of mission equipment will be maintained at the organizational level by changing boxes.

Logistics and maintenance of the QUICKFIX aircraft are based upon the AVUM and aviation intermediate maintenance (AVIM) concept. AVIM will be performed by the CAB. Aircraft needing extensive maintenance beyond division AVIM capability will be evacuated to corps AVIM units. Aircraft avionic equipment (navigational radios, communications radios, and navigational instruments) will be maintained within the AVUM and AVIM maintenance categories.

Due to the unique nature of the QUICKFIX flight platoon and its mission, priority must be placed on the processing of maintenance and parts requisitioning to ensure mission availability of these special electronic mission aircraft (SEMA). With the limited allocation of only three QUICKFIXs to the division's CAB for use by the MI battalion for SIGINT or EW missions, priority of repair must be established for these aircraft to provide for a sustained operational readiness rate.

OTHER COMBAT SERVICE SUPPORT

The MI battalion provides personnel and administrative support to its elements under the supervision of the S1. The S1 ensures that personnel management actions are quickly and efficiently processed. He maintains the daily strength reports, casualty feeder reports, and authorized position vacancy fill requests; and, in coordination with the battalion XO, determines assignments for individual replacements.

The S1 section also processes leaves and sses and distributes command informa- n; assists in providing or obtaining reli- ous, postal service, finance, and legal wel- e services; and promotes those activities ich affect the morale and general welfare MI battalion soldiers.

Although the MI battalion provides these vices, it must still depend upon the SCOM for supplemental personnel ad- nistrative support. Additional financial port is provided through the division ance support office and mobile pay ms from the corps area finance support ter. The division staff judge advocate A) provides supplemental and special- l legal services to MI battalion soldiers. SJA is responsible for the administra- of military justice and other legal mat- s. Any additional transportation re- rces the battalion may require are pro- ed through coordination between the MI talion S4 and the division transporta- officer, movement control center, SCOM.

The MI battalion depends on DISCOM for most of its medical, religious, and special physical security support requirements. Medical support is provided to battalion elements operating in the division rear by the DISCOM's medical company. Elements operating in the brigade CP area are supported by the brigade headquarters aid station. Other elements operating forward of the brigade AO are supported by the nearest maneuver battalion aid station. Teams supporting maneuver battalions receive medical support from those battalions. The IEW company team commander, through the IEWSE, arranges for medical support for forward elements and informs each element where to get its support.

Religious services are also provided through the DISCOM. Chaplains normally will conduct services for small groups throughout the division area. MI personnel may attend the service nearest their location, depending upon the combat situation and mission.

CHAPTER 7

Training

The development of a working IEW system within the division requires training. The input of people, time, and money into the Army's training base provides soldiers first, then soldiers trained in individual specialties such as infantry, artillery, and MI after their initial soldierization training. The development of a functional IEW system within the division must focus on individual, collective, and unit training requirements at all echelons to develop an IEW system capable of providing timely and accurate combat information, intelligence, and tactical EW to support the division's combat operations. It is a dynamic process requiring the attention and support of commanders, trainers, and intelligence personnel throughout the division.

BATTLE FOCUS

Like the division's overall unit training program, intelligence and EW training requires battle focus. Intelligence and EW training is based on the division combat mission and the IEW tasks inherent in missions given to all units within the division. Given such focus, soldiers of the ADA battalion become skilled in combat intelligence areas related to the division's airspace, while soldiers within the DISCOM learn to recognize rear area threat formations. This battle focus permits the translation of unit missions into supporting individual and collective tasks. These tasks, in turn, are capable of being trained to and are measurable by performance training objectives and standards of performance.

Training is a command responsibility. The G3 and S3 have staff responsibility for ensuring training programs are developed and executed under the direction of the commander. Intelligence training is heavily influenced by the G2 and S2 as the commander's senior intelligence officers. In concert with the G3, the G2 evaluates the state of IEW training within the command and recommends training objectives and programs for inclusion in the unit training program. The G2 also supports unit training programs by providing intelligence training with expert members of his staff and training materials.

TRAINING AREAS

Under the battle focus provided by the division's mission, IEW training is formulated and executed with emphasis on three distinct but complementary areas: general intelligence and security training, command and staff operations and interaction, and MI unit training (see the following illustration). All intelligence training is oriented on the successful accomplishment of the four IEW tasks: situation development, target development, EW, and CI.

All three areas include training to individual and collective tasks under standards established by the Army in soldier and common task training manuals, unit Army Training and Evaluation Programs (ARTEPs), and standards established by the division and subordinate commanders through their operations, training, and intelligence staff officers.

COMMAND STAFF INTERFACES AND INTERACTION MISSION

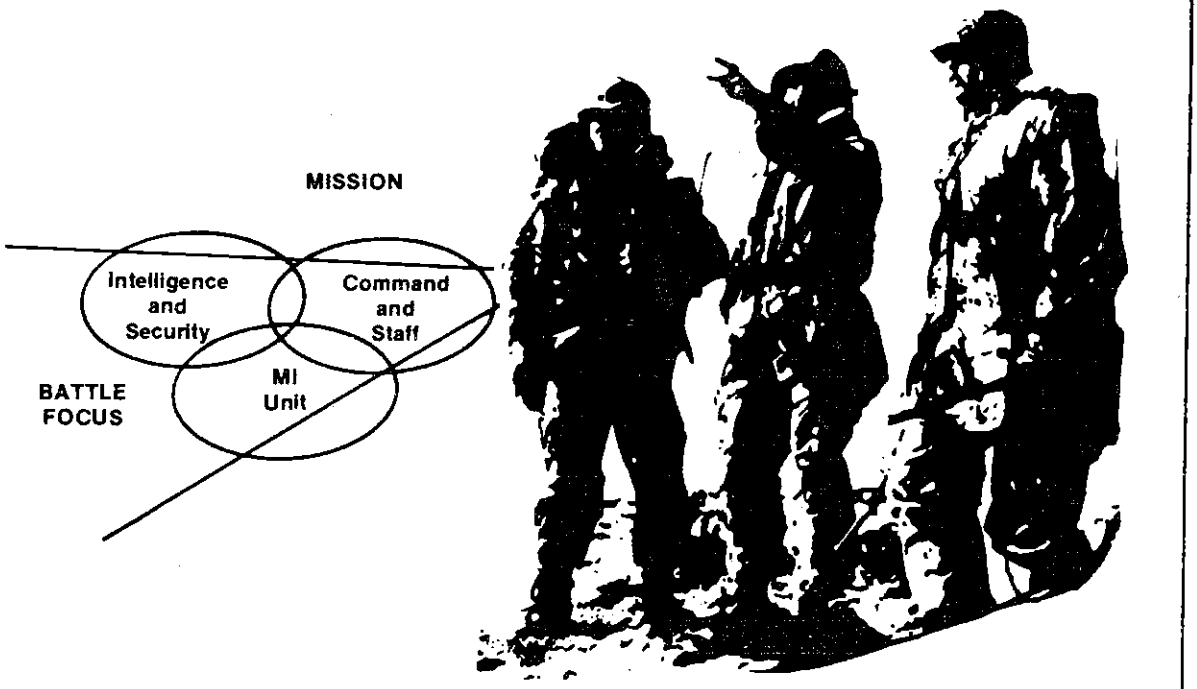

INTELLIGENCE AND SECURITY

General intelligence and security training designed to develop a disciplined combat formation and intelligence reporting system. This reporting system supports the situation and target development functions, while general security education is used to support CI, OPSEC, and denial operations. Soldiers within the division represent the largest collection agency available to the commander and his intelligence staff. The timeliness and reliability of information provided, however, is directly proportional to the training received by soldiers and the skills they develop in providing timely and accurate reports dealing with the enemy, weather, and terrain. All soldiers are trained in observation techniques and combat information reporting procedures. The soldier is trained to quickly identify and report observation of friendly and enemy equipment, to recognize enemy formations by type and size, and to provide current information on weather and terrain which might impact on friendly or enemy mission accomplishment. Specific battle focus applied within each unit of the division allows such training to progress from general to specific threats that the friendly unit might encounter on the battlefield due to its mission and related positioning. Examples of programs that support such focused threat training are the US Army Forces Command's "Project Spotlight" and the US Army Europe's "Project Focus." The intelligence aspects of scout and patrol operations are taught to ensure that soldiers are knowledgeable of observation and reporting requirements. Soldiers are trained to understand the importance of security and battlefield survival. The use of dismount points and enforcement of light and noise discipline do not constitute CI operations; they represent countersurveillance measures which allow soldiers to survive in combat. Soldiers are taught security measures and practices to protect classified and sensitive information, how to handle classified materials such as cryptographic key lists, and the importance of policing battle litter at CP locations to ensure the protection of the

friendly force by denying information from the enemy. Radiotelephone procedures and SIGSEC techniques are taught to ensure users of C-E systems employ sound security measures. Training on procedures for handling EPWs is conducted to ensure the well being of prisoners when under US control and to support IPW exploitation for intelligence purposes. The best way to teach soldiers intelligence and security subjects is to integrate these subjects with other subjects during garrison, CP, and field training exercises. The success of this training can be seen in the ease with which intelligence staffs are able to discern committed from uncommitted enemy forces based on accurate combat information reporting. With a disciplined combat information system established, the full intelligence system is better able to focus on the critical uncertainties of the battlefield. A disciplined combat information system is critical to controlling the shear volume of reports the intelligence staff must consider in developing the current enemy situation and the enemy's most likely course of action. Effective soldier training in general intelligence and security subject areas is the key to building this combat information system.

COMMAND AND STAFF

Training in command and staff operations and staff interaction supports the development of staff cognizant of its role in the planning and execution of all four IEW tasks. The role of the commander is paramount because he starts the intelligence and EW planning effort with the announcement of the unit mission and his concept for its execution. PIR are announced by the commander or are developed by the G2 and recommended to the commander to focus the intelligence effort. The G2 analyzes the terrain and the threat using IPB as the foundation for the division's full staff planning effort. The commander, G2, and G3 must work together to develop the commander's concept of operations in sufficient detail to allow the remainder of the staff to complete its plans and estimates.

Intelligence staff training focuses on the unit's mission, the division's estimate, and the intelligence cycle: planning, directing, collecting, processing, and disseminating. Detailed training in each area will allow the intelligence staff at the division's CPs, brigade and separate battalion CPs, and the intelligence staffs at corps and adjacent units to understand their role and responsibilities in making the intelligence system operate in support of the situation development, target develoment, EW, and CI functions. Again, using the battle focus provided by the unit mission will permit intelligence personnel at each CP to fully understand their role in satisfying these critical IEW tasks. Unit SOPs and intelligence portions of plans and orders specify priorities and the procedures to be used. To develop these skills, the G2 will establish intelligence training objectives during CP and field training exercises and evaluate intelligence procedures and the overall success or failure of the IEW system. Principal staff section at all echelons must work together to support EW, targeting, and friendly NBC operations to ultimately support the division's tactical operations. For EW operations, the G2, G3, FSE, and C-E staff elements must know their respective areas of responsibility and be able to thoroughly integrate their operations to support EW planning and its execution in a timely manner. For targeting operations, the triad of the G2, G3, FSE, and all special staff sections represented within the FSE (for example, Army airspace command and control (A^2C^2) air liaison officer, and chemical sections) must understand their supporting missions in target development, target selection, and decision making pertaining to engagement. To support NBC operations, the commander, G2, G3, FSE, and division chemical section serve as the key staff elements responsible for planning and conducting such operations. The development of a staff capable of planning, supporting, and conducting IEW operations is best accomplished through battle simulation, CP, and field training exercises. Through planning and rehearsal, battle staff SOPs are developed and written for use and refinement during training.

MI UNIT TRAINING

A critical element of the division's functioning IEW system is the MI battalion. To fully support the successful execution of the

· IEW tasks, the MI battalion must be able of performing its assigned and lied missions. To execute these mis-.s, soldiers within the MI battalion must roficient in individual and collective ls within their respective intelligence iplines as well as common soldier skills nsure that they can perform intelligence sions in combat. Like other unit com-nders, the MI battalion commander t pay particular attention to the profes-al development and MOS training of ·MI soldiers within the battalion whose .s are crucial to the success of the battal-s intelligence mission. Because of the e number of automotive systems within battalion and the dependency of the MI alion on all forms of communications, areas of mechanical and C-E mainte-ce and communications are particularly ortant. In developing a unit training ram, the battalion's enlisted strength 50 plus soldiers and noncommissioned ers encompassing some 33 separate Ss must be carefully considered in loping the training strategy and tempo aining. These MOSs illustrate the wide rsity of skills found within the battal-hat require detailed and careful study. complexity of the battalion's training sion is further influenced by the follow-factors:

Low density MOSs.

Extensive technical training in select MOSs.

The need for language sustainment training.

The necessity to hone these numerous skills into a collective, integrated intelligence collection and processing capability to satisfy assigned and anticipated missions.

designing the MI battalion's training ram, the MI battalion commander and 53 rely on certain key planning tools. se tools include statements of critical s at each skill level for each MOS; a nostic skill measuring system in the of a test or demonstration such as a em crew drill; and clearly defined dards of performance for each MOS by level. With these tools, the commander determines where to start this training; how to best integrate newly assigned personnel in the unit training system; and when his individual and collective training programs have reached the desired goal of demonstrated proficiency. Using these tools, the commander ensures that his training goals delineate training tasks to subordinate commanders and leaders within the battalion.

The training program of the MI battalion must be structured on how the battalion fights, not by table of organization and equipment (TOE). While individual MOS skills can be taught within the company structure, collective skills leading to combat proficiency must be developed within the combat structure of the MI battalion's task organization. Given the battle focus of the division missions and battalion-assigned missions, training emphasis is placed on the operations of the multidisciplined IEW company team organization and its interaction with the other key combat elements of the division's IEW system. To reach the desired levels of collective proficiency within the battalion, training is focused on four primary areas:

- ☐ Individual soldiers.
- ☐ Collective team or unit skills.
- ☐ Technical skills proficiency.
- ☐ Tactical proficiency and force integration.

Individual Soldier Skills

Individual soldier skills encompass individual common tasks, skills of fundamental soldiering, and MOS proficiency. Soldiers in all MOSs must know their individual jobs and how to perform them in a combat environment. This training includes common intelligence skills and training requirements contained in the division's training plan such as Subversion and Espionage Directed Against US Army and Deliberate Security Violations awareness and combat information reporting. Division training plans, MOS skill qualification tests, soldier's manuals, and common task test criteria all help to focus training to individual skill requirements. This training normally begins at the first-line supervisory level.

Collective Team or Unit Skills

Collective training is the training required to develop a team, section, or unit capability. Collective training emphasizes the individual tasks that are performed by members of a team to accomplish a common task or mission. A GSR team, for example, establishes a GSR site and places the system in operation through the coordinated efforts of the team within a specified time. The use of established crew drills permits the development of collective proficiency. Collective training above the team or crew level, in a similar manner, requires the coordinated efforts of all elements of the section or unit over time, for example, the GSR platoon deploys its individual teams and sections to establish a platoon (unit) ground surveillance system. The development of a collective capability requires periodic adjustment of training goals and objectives to allow for the integration of newly assigned personnel. The unit's training plan must be flexible and integrate new personnel and bring them to an acceptable level of proficiency for the teams, sections, or units to which they are assigned. The ARTEP mission training plan and collective training objectives established by the commander based on the overall unit mission serve as training and evaluation tools for measuring team and unit proficiency.

Technical Skills Proficiency

The development and sustainment of technical skills make the MI battalion somewhat unique. While nearly all branches of the Army have technical skills they must train to, the MI force must establish a unique training environment to maintain required levels of technical proficiency. While the artillery battalion can rehearse fire direction missions in a live-fire exercise, and medical specialists can perform their individual and collective tasks in aid stations daily, many individual and collective training tasks common to the MI unit require the development of a unique training environment to replicate the battlefield environment. Language training for example does not in itself constitute a technical training requirement. Language training related to the accompanying skills required of a prisoner of war interrogator or COMINT voice intercept operator does fall into the realm of technical training. To replicate the battlefield environment and conduct language sustainment training for such key intelligence collectors requires a great deal of planning. To link such training to the battle focus of the unit's mission requires time and resources which the MI battalion commander must manage and develop. Similar challenges exist in developing the technical training required of other SIGINT and EW system operators and teams such as those that man the TEAMPACK, QUICKFIX, and TRAFFIC JAM systems. The methods, techniques, and procedures employed in providing technical control of SIGINT and EW resources and in performing SIGINT analysis also require the creation of a unique training environment. The environment must connect the individual collector to the completion of the analysis function which supports the all-source intelligence system. While all the elements of this intelligence system can describe their individual and collective tasks, the total system can train to required levels of proficiency only when conducting actual intelligence operations or operating in a simulated battlefield environment which replicates the threat on a factual basis.

Specific technical support packages often tailored to the unit's mission or geographic environment are used to enhance sustainment training in technical skills. The Army's readiness training (REDTRAIN) program is specifically designed to support MI unit commanders in establishing and sustaining technical training within the unit. REDTRAIN funds are used to purchase in-unit training devices and programs and to send MI soldiers to locations where the environment exists to support technical training, particularly for low density MOSs. The development of the TROJAN program throughout the Army is another measure being taken to enhance in-unit technical skills training. The commanders greatest training resource remains the proficient cadre of noncommissioned officers and officers with years of experience in the technical aspects of their jobs.

ıe commander's greatest challenge is ten simply organizing the training pro- am to effectively use these training sources.

Tactical Proficiency and Force Integration

The purpose of the MI battalion's train- g program is the successful accomplish- ent of all individual and collective tasks a fighting unit in a tactical environment. ll MI elements organized for combat must capable of deploying, accomplishing eir assigned missions, and sustaining eir operations over time to support the full ecution of the MI battalion missions. The tegration of all MI elements into a single ultidisciplined organizational capability quires the clear demonstration of indi- dual and collective skills, technical profi- ency, and the coordination required to put all together. It is in this area that the MI ttalion integrates its operations with ose of other units and sections within the vision to support the situation develop- ent, target development, EW, and CI sks of the total IEW system. Training is complished through CP and field training ercises involving all key elements of the I battalion. It is through such exercises at the MI battalion is able to exercise col- tive intelligence skills in a realistic train- g environment. The training should begin the lowest subunit level (team, squad, tion) and its corresponding mission.

First-Line Supervisor

The advantages of the first-line supervi- r being the primary trainer are—

- He is aware of the specific strengths and weaknesses of his subordinates.
- He can identify the training required to eliminate the weaknesses of his subordinates.
- He is available to conduct hip-pocket training during periods of inactivity with little or no formal notice.
- He can teach MOS skills as well as common soldier skills (individual and collective).

Standardized evaluation and training tools available to the first-line supervisor include the common skills manual, ARTEP manual, soldier's manuals, technical manuals, and the crew drill. This allows a step-by-step evaluation of the team and the recording of the degree of proficiency with which the team performs each task.

The last tool to be used by the first-line supervisor is the technical support package. Technical support packages can be used as they are or can be modified to meet specific training requirements. Additional training tools can be developed internally.

The first-line supervisor records in individual job books all training and evaluations to indicate the degree of progress or proficiency of each task to prioritize needed training.

An additional advantage to using the first-line supervisor as the primary trainer is that it assists in his development as a trainer and leader. Skills learned from practical hands-on training experience cannot be developed in formal leadership courses such as the Primary Leadership Development Course.

In order for the first-line supervisor to be developed as a trainer and leader, the commander, his staff, and the NCO chain must—

- ☐ Evaluate each first-line supervisor on his present strengths and weaknesses as a trainer and leader.
- ☐ Give the first-line supervisor the responsibility for specific training tasks and objectives based on his individual capability as a trainer and leader. He should be permitted flexibility in determining when, how, and where tasks are to be trained. The proficiency of his element is the goal not the means.
- ☐ Establish a program to evaluate the trainer's progress as a trainer and leader. This program should include continuous counseling on the trainer's strengths and weaknesses, to include guidance on improvement where needed, and noncommissioned officer

development classes conducted on a regular basis.

- Allow the trainer to make and learn from his own mistakes.

Platoon

The next level, the platoon, is the highest subunit, by TOE, where the battalion is organized for combat.

In many divisions, brigades train within a rotating cycle, with each phase of the cycle having a different level of intensity: low, medium, and high.

- Low. Training is kept at a minimum during this phase to allow for the integration of new personnel, ordinary leaves, passes, support details, maintenance, and attendance at formal schools.
- Medium. Individual training and integration of that training at the subunit level. Unit level preparation for ARTEPs, unit evaluations, and intensive equipment maintenance.
- High. The brigade (and nonbrigade units which are combat organized to support it) is on alert status as the ready brigade. Because of this commitment, brigade personnel cannot be allowed ordinary leave during ARTEPs or when deployment exercises are conducted.

Because the platoons of the MI battalions may be part of a brigade slice, either as a separate entity or as part of a combat-organized IEW company team, it may structure its training program in concert with that of the IEW company team and the brigade it supports. Platoon-level ARTEPs can be conducted concurrent with the platoon's support of brigade and battalion field training exercises and ARTEPs.

The primary task during the training cycle is to evaluate the proficiency of the platoon as an entity and not the proficiency of its subelements. The subelements should have reached an acceptable level of team proficiency by the end of the previous cycle.

The responsibility for platoon-level training belongs to the platoon leader and platoon sergeant. The platoon leader's responsibilities include—

- Coordinating with the commander and staff to ensure his training program is in concert with the battalion and company training programs.
- Supervising (with the platoon sergeant) the subelements to ensure that they are proficient in time for the primary training cycle.
- Monitoring the progress of the platoon sergeant's leadership and training development program.
- Requesting training sites and materials for the platoon.
- Developing a revised training program designed and prioritized to correct specific deficiencies during the last platoon-level training cycle. This is of critical importance when those identified deficiencies are in specific IEW individual and collective tasks.

The platoon sergeant's responsibilities closely parallel those of the platoon leader. The platoon sergeant must be able to take charge of the platoon's training in the platoon leader's absence. He advises the platoon leader on training and is responsible for the professional development of the first-line supervisors.

Company

The next level of training is the company. The MI company commander is responsible for the training of his company to a proficiency level to meet the mission.

Responsibility for specific individual and collective tasks should be placed with each company commander. For example, management responsibility for all MOS training common to the 98Cs should be given to one company. This method of delegating training responsibilities can be extended to specific, common, individual, and collective proficiency. This is an effective and efficent method of managing training. The responsibility for a specific task is not diffused among three or four commanders.

Battalion

The next level of training is the battalion. The battalion trains for combat as it is combat organized, not by TOE. The battalion commander and his S3 should coordinate with division to ensure that any opportunity to train and evaluate the TCAE and the MI battalion staff (TOC and MI battalion trains) is not lost.

The battalion S3 should ensure an even flow of training and qualification based on the training cycle of the division.

APPENDIX A

Intelligence and Electronic Warfare Report Formats

Formats for key IEW messages and reports are provided on the following pages. Where applicable, message formats and examples in the Joint Interoperability of Tactical Command and Control Systems (JINTACCS) format are included. JINTACCS formats provide for the enhancement of interoperability between the uniformed services, national agencies, and between allies and expedite the transfer of information from manual to automated systems. For further guidance on the use of JINTACCS report formats, refer to the JINTACCS User Handbook. For a full review of report formats, see FM 34-3.

COMINTADTSK FORMAT (JINTACCS)

LINE 1: CLASSIFICATION

LINE 2: SET NAME/COMINTADTSK/ORIGINATOR//

LINE 3: SET NAME/NATIONALITY/ENEMY UNIT NAME/CASE NOTATION/TIME ON/TIME OFF//

LINE 4: SET NAME/COMMENTS ON TYPE OF COLLECTION, COVERAGE, OBJECTIVE, TYPE AND FREQUENCY OF REPORTS, TECHNICAL DETAILS//

COMINTADTSK EXAMPLE (JINTACCS)

```
UNCLAS
MSGID/COMINTADTSK/V CORPS//
CVRREQD/GC/1 GDS TANK ARMY/ABC00001/251000Z/302400Z//
AMPN/AIRBORNE COLLECTION, FULL COVERAGE, IMPENDING MOVEMENTS, TACREP WHEN
NOTED, FREQ RANGE 4-12 MHZ, MORSE TFC FM MAIN CP'S//
```

COMMUNICATIONS INTELLIGENCE ADVISORY TASKING MESSAGE

The communications intelligence advisory tasking message (COMINTADTSK) is used to task specific COMINT collection missions. The COMINTADTSK is also used by the commander joint task force to request COMINT coverage assistance from joint task force component commands which cannot be covered by direction of joint task force assets and to request COMINT coverage assistance from US SIGINT System (USSS) resources. It is used by component commanders to request from the commander joint task force COMINT coverage assistance which cannot be provided by the requesting component and to request, through the commander joint task force, COMINT coverage assistance from the USSS.

160-850 94 - 6

DAILY INTELLIGENCE SUMMARY

Use the daily intelligence report (DISUM) to report a summary of all major intelligence produced and collected during the previous 24-hour period. This message includes the effective time period and free-text comments on the general enemy situation; enemy air, ground, maritime, nuclear, biological, and chemical operations; training activities; other intelligence factors; and the CI situation.

DISUM FORMAT (JINTACCS)

LINE 1: Classification

LINE 2: SET NAME/DISUM/ORIGINATOR//

LINE 3: SET NAME/TIME FROM/TO: /ASOF: //

LINE 4: SET NAME/GENTEXT/GENERAL SITUATION COMMENTS//

LINE 5 - AS MANY LINES NEEDED TO COVER ALL SUBJECTS. REPEATS OF LINE 4.

DISUM EXAMPLE (JINTACCS)

```
UNCLAS
MSGID/DISUM/54TH INF DIV(MECH)//
PERID/090001Z/TO:100001Z/ASOF:100400Z//
GENTEXT/GENERAL ENEMY SITUATION/RESERVE UNITS OF 12TH AND 25TH MRR MOVED TO
CENTRAL FRONT//
GENTEXT/ENEMY GROUND OPERATIONS/LINES CONTINUE TO REFLECT DEFENSIVE POSTURE//
GENTEXT/ENEMY NUCLEAR OPERATIONS/INDICATIONS SHOW NO CHANGE IN NUCLEAR
PREPARATIONS//
GENTEXT/OTHER INTELLIGENCE SITUATION/2ND ITR POSS ATTACHED TO 20TH MRD//
GENTEXT/COUNTERINTELLIGENCE SITUATION/HEAVY CI MEASURES TAKEN SW OF HIELSTUK//
```

ELECTRONIC INTELLIGENCE REQUIREMENT TASKING MESSAGE

The electronic intelligence requirement tasking message (ERTM) is used for operational control of ELINT collection resources by operational commanders or requests for ELINT collection sources outside the commander's control.

ERTM FORMAT (JINTACCS)

LINE 1: CLASSIFICATION

LINE 2: SET NAME/ERTM/ORIGINATOR//

LINE 3: SET NAME/PLACE//

LINE 4: SET NAME/DATA ENTRY/ELINT NOTATION/EMITTER DESIGNATION /LOWER LIMIT/HIGHER LIMIT/TARGET LOCATION//

LINE 5: SET NAME/REF NUMBER/LOCATION/FINGERPRINT/DEVIATION /COMBINATIONS/ACCURACY/ACCEPTABLE ERROR/TIME INTERVAL /INTERVAL BETWEEN VIEWING/REPORTING TIME/REPORTING DELAY /DURATION//

ERTM EXAMPLE (JINTACCS)

```
UNCLAS
MSGID/ERTM/533 MI BN//
AREAREQ/CTRY:BC//
SELTGT
/DE/ELNOT/EMIT-DESIG   /LOWRF      /HIGHRF    /TGTLOC
/01/A123 /ADOBE        /    190MHZ/    210MHZ/733ZN10249W
/02/A321 /CHIEF        /     82MHZ/     98MHZ/3541N9620W//
SELREQR
/DE/DE/L/I/P/E/REQACC /ACPTACC/ERR/ERA/TR /TA /DUR
/01/- /Y/Y/N/Y     50M/   100M/ 2H/ 8H/10M/20M/ 2D
/02/- /N/N/Y/Y     50M/   100M/12H/ 1D/ 2H/ 4H/12H//
```

ELECTRONIC WARFARE APPROVAL MESSAGE

The electronic warfare approval messge (EWAM) allows the joint force commander to approve or modify the joint EW operations plan.

EWAM FORMAT (JINTACCS)

LINE 1: CLASSIFICATION

LINE 2: SET NAME/EWAM/ORIGINATOR//

LINE 3: SET NAME/TIME FROM/TO: /ASOF: //

LINE 4: SET NAME/ACTION//

EWAM EXAMPLE (JINTACCS)

```
UNCLAS
MSGID/EWAM/CDR 8TH JTF//
PERID/241425Z/TO:241800Z/ASOF:241500Z//
YESNO/APROV//
```

ELECTRONIC WARFARE EMPLOYMENT MESSAGE

The electronic warfare employment message (EWEM) is used by the joint operations center to eliminate potential EW mission conflicts. It is also used by the component commander to inform the joint force commander of his intentions to employ ECM for either a specific mission or reporting time.

EWEM FORMAT (JINTACCS)

LINE 1: CLASSIFICATION

LINE 2: SET NAME/EWEM/ORIGINATOR//

LINE 3: SET NAME/TIME FROM/TO: /ASOF: //

LINE 4: SET NAME/DATA ENTRY/REQUEST NUMBER/COUNTRY/LOCATION/CALL SIGN /UNIT NAME//

LINE 5: SET NAME/DATA ENTRY/FUNCTION/EQUIPMENT NAME/NOTATION /FREQ BANDWIDTH/SIGNAL TYPE//

LINE 6: SET NAME/DATA ENTRY/ON TIME/OFF TIME/PRIORITY/ECM TYPE /ECM TECHNIQUE//

LINE 7: SET NAME/DATA ENTRY/PRIME FREQ/SECOND FREQ/LOWER RF/UPPER RF /PRFPRI//

EWEM EXAMPLE (JINTACCS)

```
UNCLAS
MSGID/EWEM/102 MI BN//
PERID/260001Z/TO:271200Z/ASOF:271500Z//
5ETGWHO
/DE/REQNO  /CY/EMITLOC      /TGT-CALL-SIGN    /ENUNIT
/01/1111   /ZA/MU513526     /XYZ23            /1ST NKP BDE//
5ETGWHAT
/DE/FC/TGT-EQUIP-NAME       /ELNOT/RF-BANDWIDTH/SIG
/01/KR/HELMENT              /ABC1 /       23.5/W//
5EECMACT
/DE/ON-TIME/OFFTIME/PRY/ECM-TYPE /ECM-TECQ
/01/260200Z/270200Z/  1/JAMMING  /SDASIM//
5GTGFREQ
/DE/PRYFREQ     /SECFREQ  /LOWRF      /HIGHRF     /PRFPRI
/01/38.7MHZ/      48.2MHZ/          -/          -/PRI10//
```

ELECTRONIC WARFARE MISSION SUMMARY

The electronic warfare mission summary (EWMSNSUM) is used to summarize significant EW missions and the status of offensive EW assets. It is not to be used for reporting results of ESM operations.

EWMSNSUM FORMAT (JINTACCS)

LINE 1: CLASSIFICATION

LINE 2: SET NAME/EWMSNSUM/ORIGINATOR//

LINE 3: SET NAME/TIME FROM/TO: /ASOF: //

LINE 4: SET NAME/HEADING//

LINE 5: SET NAME/DATA ENTRY/REQUEST NUMBER/COUNTRY/LOCATION/CALL SIGN /UNIT NAME//

LINE 6: SET NAME/DATA ENTRY/FUNCTION/EQUIPMENT NAME/NOTATION /FREQ BANDWIDTH/SIGNAL TYPE//

LINE 7: SET NAME/DATA ENTRY/ON TIME/OFF TIME/PRIORITY/ECM TYPE/ECM TECHNIQUE//

LINE 8: SET NAME/DATA ENTRY/PRIME FREQ/SECOND FREQ/LOWER RF/UPPER RF/PRFPRI//

LINE 9: SET NAME/DATA ENTRY/EW ASSET//

EWMSNSUM EXAMPLE (JINTACCS)

```
UNCLAS
MSGID/EWMSNSUM/1ST PLT CO A 501 MI BN//
PERID/081200Z/TO:081800Z/ASOF:081200Z//
HEADING/EW/MISSIONS//
SETGWHO
/DE/REQNO /CY/EMITLOC      /TGT-CALL-SIGN  /ENUNIT
/01/A123  /WA/4523N12246W  /ABADABA        /1ST ADA BN//
SETGWHAT
/DE/FC/TGT-EQUIP-NAME    /ELNOT/RF BANDWIDTH/SIG
/01/RR/SWAMPRAT          /AM159/        14.2/C//
SEECMACT
/DE/ON-TIME/OFFTIME/PRY/ECM-TYP/ECM-TECQ
/01/100001Z/Z02400Z/ 4/INTERFER/INCDSPOOF//
SETGFREQ
/DE/PRYFREQ    /SECFREQ    /LOWRF       /HIGHRF      /PRFPRI
/01/           -/          -/   58.2 MHZ/   79.3 MHZ/PRI20//
SEWSYST
/DE/TYPEWS
/01/MSQ-103C//
```

NOTE: The TACREP is to be used to report ESM operational results.

ELECTRONIC WARFARE REQUESTING/ TASKING MESSAGE

The electronic warfare requesting/tasking message (EWRTM) is for tasking units under your control to perform EW missions or to request EW support from units not under your control. This message includes descriptions of ECM and ESM targets you need support against.

EWRTM FORMAT (JINTACCS)

LINE 1: CLASSIFICATION

LINE 2: SET NAME/EWRTM/ORIGINATOR//

LINE 3: SET NAME/UNIT NAME//

LINE 4: SET NAME/ECM TARGETS//

LINE 5: SET NAME/DATA ENTRY/REQUEST NUMBER/COUNTRY CODE/EMITTER LOCATION /TARGET CALL SIGN/ENEMY UNIT NAME//

LINE 6: SET NAME/DATA ENTRY/RADIO-RADAR FUNCTION/TARGET EQUIPMENT NAME /ELINT NOTATION OR SORTING CODE/FREQUENCY BANDWIDTH/SIGNAL TYPE//

LINE 7: SET NAME/DATA ENTRY/ON TIME/OFF TIME/PRIORITY/ECM TYPE /ECM TECHNIQUE//

LINE 8: SET NAME/DATA ENTRY/PRIMARY FREQUENCY/SECOND FREQUENCY /LOWER RF LIMIT/UPPER RF LIMIT/PRIPRF//

LINE 9: SET NAME/ESM TARGETS//

LINE 10: SET NAME/DATA ENTRY/REQUEST NUMBER/COUNTRY CODE/EMITTER LOCATION /TARGET CALL SIGN/ENEMY UNIT NAME//

LINE 11: SET NAME/DATA ENTRY/RADIO RADAR FUNCTION/TARGET EQUIPMENT NAME /ELINT NOTATION/FREQUENCY BANDWIDTH/SIGNAL TYPE//

LINE 12: SET NAME/DATA ENTRY/PRIMARY FREQUENCY/SECOND FREQUENCY /LOWER RF LIMIT/UPPER RF LIMIT/PRIPRF//

LINE 13: SET NAME/DATA ENTRY/ESM ON TIME/ESM OFF TIME/EEI CATEGORY/PRIORITY//

EWRTM EXAMPLE (JINTACCS)

```
UNCLAS
MSGID/EWRTM/501 MI BN/
TASKUNT/2D C&J PLT//
HEADING/ECM TARGETS//
SETGWHO
/DE/REQNO /CY/EMITLOC       /TGT-CALL-SIGN     /ENUNIT
/01/A543A /ZZ/4530N08045E  /UNK               /-//
SETGWHAT
/DE/FC/TFT-EQUIP-NAME    /ELNOT/RF-BANDWIDTH/SIG
/01/RR/JUMPER            /A0001/         14.5/S//
SEGCMACT
/DE/ON-TIME/OFFTIME/PRY/ECM-TYP/ECM-TECQ
/01/051200Z/100600Z/  2/JAMMING/BLANKET//
SETGFREQ
/DE/PRYFREQ     /SECFREQ     /LOWRF      /HIGHRF      /PRFPRI
/01/     32.0MHZ/     42.0MHZ/          -/           -/PRI10//
HEADING/ESM TASKING//
SETGWHO
/DE/REQNO /CY/EMITLOC       /TGT-CALL-SIGN     /ENUIT
/01/26021 /ZZ/32VMN123123  /SGEZZ             /34TH MRR//
SGETWHAT
/DE/FC/TGT-EQUIP-NAME     /ELNOT/RF-BANDWIDTH/SIG
/01/GM/FASTDITCH          /P555A/         28.5/P//
SETGFREQ
/DE/PRYFREQ     /SECFREQ    /LOWRF       /HIGHRF     /PRFPRI
/01/           -/           -/       67MHZ/      83MHZ/--//
SECOLACT
/DE/ON-TIME/OFFTIME/EEICAT/PRY
/01/051200Z/07Z400Z/     22/  1//
```

NOTE:

Use EWEM to answer EWRTMs that you receive. Do not use EWRTM to task/request SIGINT assets. Use the ERTM and COMINTADTSK to task/request SIGINT assets.

INTELLIGENCE REPORT

Use the intelligence report (INTREP) for the joint exchange of information you get through tactical collection efforts. The INTREP provides timely information about events that could have an immediate and major effect on current planning and operations or information that may be of timely interest at the national level. This message is the main means of reporting HUMINT and CI information.

This message includes the source of the intelligence, effective time, target type and description, target location, and enemy losses (personnel and equipment).

INTREP FORMAT (JINTACCS)

LINE 1:	CLASSIFICATION
LINE 2:	SET NAME/INTREP/ORIGINATOR//
LINE 3:	SET NAME/HEADING//
LINE 4:	SET NAME/DATA ENTRY/TARGET TYPE/EQUIPMENT NAME /EQUIPMENT MODEL/AMOUNT//
LINE 5:	SET NAME/DATA ENTRY/TARGET SIZE/RADIUS/LENGTH/WIDTH /HEIGHT//
LINE 6:	SET NAME/DATA ENTRY/SPEED/DIRECTION/ALTITUDE/ELEVATION /TARGET STATUS/TARGET NUMBER/COUNTRY OF SIGHTING/ /TARGET CATEGORY//
LINE 7:	SET NAME/DATA ENTRY/AREA NAME/LOCATION/LOCATION QUALIFIER//
LINE 8:	SET NAME/DATA ENTRY/ACTIVITY TYPE//

INTREP EXAMPLE (JINTACCS)

```
UNCLAS
MSGID/INTREP/II CORPS//
HEADING/INFORMATION//
LTGTDATA
/DE/TGTTYP/EQMT                          /EQMOD /QTY
/01/APC   /PERSONNEL CARRIER             /BTR60 / 48
/02/APC   /PERSONNEL CARRIER             /-     /  5
/03/BRUHBT/VEHICLE FLOAT BRIDGE          /-     /  1//
LTGTDIM
/DE/SIZ-/RAD   /LGTH   /WDTH   /HEIGHT
/01/BN  /  800M/      -/      -/     -
/02/CO  /     -/   300M/   200M/     -
/03/SM  /     -/    60M/    10M/    SM//
LTGTMOVE
/DE/SPD     /DIR/ALT    /ELEV  /TGTSTATUS/TGT-ID          /CC/CAT
/01/   20MPH/S  /-      /  270M/OCCOPRARM/-               /ZZ/12345
/02/   30MPH/SSE/-      /  250M/OCCOPRARM/-               /ZZ/23456
/03/       -/-  /-      /  180M/OCCDEFUCO/ABN1026         /ZZ/34567//
LTGTLOC
/DE/AREA NAMG                                 /LOCATION          /LQFR
/01/BRADESLAVA RIDGE                          /23BNV186421       /A
/02/GROVOTNY                                  /23BNV220436       /A
/03/FWSINOVA RIVER                            /23BNV1962400b     /A//
LTGTACT
/DE/ACTTYP
/01/ADVANC
/02/ADVANC
/03/-//
```

INTELLIGENCE SUMMARY

The intelligence summary (INTSUM) is used to provide a brief summary of information of intelligence interest covering a specific period of time. It provides a summary of the enemy situation in forward and rear areas, enemy operations and capabilities, and weather and terrain characteristics.

INTELLIGENCE SUMMARY FORMAT (JINTACCS)

LINE 1:	CLASSIFICATION
LINE 2:	SET NAME/INTSUM/ORIGINATOR//
LINE 3:	SET NAME/TIME FROM/TO: /ASOF: //
LINE 4:	SET NAME/HEADING INFORMATION//
LINE 5:	SET NAME/DATA ENTRY/QUANTITY/TARGET TYPE/EQUIPMENT TYPE/ACTIVITY TYPE/TIME/LOCATION//
LINE 6:	SET NAME/DATA ENTRY/ENEMY UNIT DESIGNATOR//
LINE 7:	SET NAME/LOCATION/RADIUS, WIDTH, ELLIPTICAL AREA/LOCATION//
LINE 8:	SET NAME/NARRATIVE//
LINE 9:	SET NAME/HEADING INFORMATION//
LINE 10:	SET NAME/DATA ENTRY/QUANTITY/COUNTRY/AIRCRAFT NAME /ACTIVITY TYPE/TIME/LOCATION//
LINE 11:	SET NAME/DATA ENTRY/ENEMY UNIT NAME//
LINE 12:	SET NAME/NARRATIVE//
LINE 13:	SET NAME/COUNTRY/AIRFIELD NAME/LOCATION//
LINE 14:	SET NAME/AIRCRAFT NAME/QUANTITY/AIRCRAFT CATEGORY//

RRI EXAMPLE (JINTACCS)

UNCLAS
MSGID/RRI/III MAG//
REF/A/RI/36THINFBN/070902MAY86//
RMKS/WE SHOW THAT TEN SAM SITES ARE ACTIVE IN REQUESTED AREA AT:

	LOCATION	TYPE SAM	NOTE
1	453721N1573420E	SA 8	LAST KNOWN LOC
2	453905N1574010E	SA 2	4 LAUNCHERS UP
3	453901N1575010E	SA 2	6 CONFIGUR
4	454010N1565130E	SA 8	
5	454015N1571020E	SA 2	HGT FINDR DAM
6	455120N1565959E	SA 2	
7	454131N1570110E	SA 4	
8	454120N1565739E	SA 4	
9	454130N1792731E	SA 3	
10	454122N1575751E	SA 6	LAST LOC//

SIGNALS INTELLIGENCE/ ELECTRONIC COUNTERMEASURES PLANNING/ COORDINATION MESSAGE

The signals intelligence/electronic countermeasures planning/coordination message (SIEPCM) is used to plan and coordinate SIGINT collection and ECM communications/noncommunications missions. It is also used to request cross-service assets to satisfy tasks beyond a component service's capabilities.

SIEPCM FORMAT (JINTACCS)

LINE 1: CLASSIFICATION

LINE 2: SET NAME/SIEPCM/ORIGINATOR//

LINE 3: SET NAME/JAMMING DECEPTION TARGETS//

LINE 4: SET NAME/DATA ENTRY/COUNTRY//ENEMY UNIT NAME/CASE NOTATION /CALL SIGN//

LINE 5: SET NAME/DATA ENTRY/FUNCTION/EQUIPMENT NAME/BANDWIDTH/MODULATION /NOTATION/RADIO FREQUENCY MODE/ECM FREQUENCY//

LINE 6: SET NAME/DATA ENTRY/LOCATION//

LINE 7: SET NAME/DATA ENTRY/ECM TYPE//ECM TECHNIQUE/TIME ON/TIME OFF /SUPPORT REQUIREMENT//

SIEPCM EXAMPLE (JINTACCS)

```
UNCLAS
MSGID/SIEPCM/501 MI BN//
HEADING/JAMMING DECEPTION TARGETS//
TGTWHO/01/ZZ/3RD TR/ABCD00001/TCS:ZQS1//
TGTWHAT/01/RS/SLAMMER/23.5/AM/ELNOT:ABC01/FREQ:126.5 MHZ//
TGTWHERE/01/32UMN123123//
ECMACTY/01/INTRUS/ICDNUIS/140001Z/141200Z/NO//
```

SENSITIVE INFORMATION SUMMARY

Use the sensitive information summary (SISUM) to provide a daily summary of all events of significant tactical interest derived from special compartmented intelligence sources during the previous 24-hour period. The SISUM augments/amplifies information contained in the DISUM.

SISUM FORMAT (JINTACCS)

LINE 1: CLASSIFICATION

LINE 2: SET NAME/SISUM/ORIGINATOR//

LINE 3: SET NAME/TIME FROM/TO: /ASOF: //

LINE 4-7: SET NAME/ACTIVITY TYPE/COMMENTS//

LINE 8: SET NAME/HEADING//

LINE 9-10: SET NAME/ENEMY UNIT NAME/ACTUAL KILLED IN ACTION
/ESTIMATED KILLED IN ACTION/ESTIMATED WOUNDED IN ACTION
/NUMBER CAPTURED/MISSING IN ACTION/DESERTED/TIME//

LINE 11: SET NAME/DATA ENTRY/EQUIPMENT CAPTURED/QUANTITY/LOCATION//

LINE 12: SET NAME/DATA ENTRY/EQUIPMENT DESTROYED/QUANTITY/LOCATION//

LINE 13: SET NAME/DATA ENTRY/EQUIPMENT DAMAGED/QUANTITY/LOCATION//

LINE 14: SET NAME/DATA ENTRY/EQUIPMENT ABANDONED/QUANTITY/LOCATION//

SISUM EXAMPLE (JINTACCS)

```
UNCLAS
MSGID/SISUM/II CORPS MAIN//
PERD/2500012/TO:251200Z/ASOF:251200Z//
GENTEXT/ENEMY GROUND OPERATIONS/NOTICED MASSIVE REINFORCEMENT AND
POSSIBLE ASSAULT PREPARATIONS//
GENTEXT/ENEMY BIOLOGICAL OPERATIONS/1 ROCKET WITH NERVE GAS IMPACTED
AT 250630Z, LOCATION 26TSV276452//
HEADING/ENEMY-LOSSES//
ENLOS/ENUNIT:16TH MTR RFL REGT/ACTKIA:125//ESTKIA:200/ESTWIA:175
/CPTRD:86/MIA:20/DSRT:5/2510152
1CAPEQ
/DE/EQUIP-CPTRD                          /QTY /LOCATION
/01/ASLTR-ASSAULT RIFLE-AK74             / 116/26TSR352765
/02/TANK-MEDIUM TANK-T72                 /  25/26TSR360753//
4DGSEQ
/DE/EQUIP-DES                            /QTY /LOCATION
/01/TANK-MEDIUM TANK-T72                 /  26/26TSR352765
/02/APC-ARMORED PERS CARRIER-BTR         /  47/26TSR360753//
4DAMEQ
/DE/EQUIP-DAM                            /QTY /LOCATION
/01/TANK-MEDIUM TANK-T72                 /  39/26TSR352765
/02/APC-ARMORED PERS CARRIER-BMP         /  66/26TSR360753//
1ABANDGQ
/DE/EQUIP-ABAND                          /QTY /LOCATION
/01/ASLTR-ASSAULT RIFLE-AK74             /  27/26TSR352765
/02/APC-ARMORD PERS CARRIER-BTR          /   6/26TSR360753//
HEADING/ENEMY-UNIT-MOVEMENTS//
1EUDGSIG
/DE/ENUNIT
/01/6TH MTR RFL REGT
/02/18TH GDS TANK DIV
/03/5TH CAA//
6EMDVE
/DE/OLD-LOCATION   /NEW-LOCATION   /ECH-LVL/TIMELOC/STRENGTH
/01/26TSR749652    /26TSR715601    /RGT    /250400Z/      75
/02/26TSR387668    /26TSR371523    /DIV    /250700Z/      60
/03/26TYR790520    /27YSV512554    /ARMY   /250800Z/      80//
```

SITUATION REPORT

Use the commander's situation report (SITREP) for changes in the situation since the last report. Areas covered are current operational plans, current status, unit readiness, situations that may affect operations, operational problems, recommended course of action, and items not included in other reports.

This message is divided into areas of effective time period, map reference, enemy situation changes, friendly situation changes, administration and logistical situation, general comments and recommendations, and the commander's personal evaluation of the situation.

SITREP FORMAT (JINTACCS)

LINE 1: CLASSIFICATION

LINE 2: SET NAME/SITREP/ORIGINATOR//

LINE 3: SET NAME/TIME FROM/TO:/ASOF://

LINE 4: SET NAME/HEADING//

LINE 5: SET NAME/DATA ENTRY/COUNTRY/ACTIVITY TYPE/ENEMY UNIT NAME/UNIT LOCATION/TIME OF SIGHTING//

LINE 6: SET NAME/HEADING//

LINE 7: SET NAME/UNIT NAME/UNIT LOCATION//

LINE 8: SET NAME/AMPLIFICATION DATA//

LINE 9: SET NAME/HEADING/AMPLIFICATION DATA//

LINE 10: SET NAME/HEADING/AMPLIFICATION DATA//

SITREP EXAMPLE (JINTACCS)

```
UNCLAS
MSGID/SITREP/12TH INF DIV//
PERID/121315Z/TO:122330Z/ASOF:122330Z//
HEADING/ENEMY//
SEUNIT
/DE/CY/ACTTYP/ENUNCIT          /UNITLOC              /TIMPOS
/01/ZZ/RECON /UNK RECON CO     /SWAYBACK RIDGE       /121830Z
/02/ZZ/DEPLOY/4TH MRB          /32FUV12341234        /121910Z//
HEADING/OWN SITUATION//
SNREADY
/DE/UNITDES            /UNITLOC
/01/C-1-6 MECH         /VIC HILL 428
/02/4-4 ARMOR          /32FUD875182//
AMPN/C-1-6 MECH C4 FOR PERSONNEL, COMBAT READY 72 HOURS.
4-4 ARMOR C4 FOR EQUIPMENT, READY 24 HRS//
GENTEXT/GENERAL/WORK CONTINUING ON UPGRADE OF MRL SYSTEMS//
GENTEXT/COMMANDER EVALUATION/ATTACK WITHIN 72 HOURS UNLIKELY//
```

TACTICAL REPORT

Use the tactical report (TACREP) to quickly report vital intelligence information such as fleeting target, threat or danger to friendly units, distress situations, radio DF and other EW information, newly discovered enemy intentions, battle damage assessment data, and combat information that cannot be exchanged with tactical data systems between tactical units.

This message includes enemy activity; ship, aircraft, or ground vehicle type; related unit; location; speed and direction of movement for maritime, air, and ground enemy units with amplifying information; and EW information such as emitter frequency, bandwidth, call sign, and type of EW.

TACREP FORMAT

LINE 1:	CLASSIFICATION
LINE 2:	SET NAME/TACREP/ORIGINATOR//
LINE 3:	SET NAME/EFFECTIVE TIME/AMOUNT/SOURCE/SUBJECT TYPE/PRIMARY IDENTIFIER/UNIT IDENTIFICATION/LOCATION//
LINE 4:	SET NAME/AMPLIFYING DATA//
LINE 5:	SET NAME/RADIO FREQUENCY/BANDWIDTH/CALL SIGNS//

TACREP EXAMPLE (JINTACCS)

```
UNCLAS
MSGID/TACREP/CTF134//
GNDOP/121130Z/1/US/TTY/TGR-1/UNK/UK:123ABC234//
OPSUP/SER:A/UNID:6TH CAA/AREANM:NORTHERN FRONT/ACTTYP:RVRCRS/ETD:121530Z
/DEPART:GEROFT//
COMEW/12.530MHZ/2.5/ATRAS//
```

INTELLIGENCE ESTIMATE

The intelligence estimate is a logical and orderly examination of the intelligence factors affecting mission accomplishment. It provides the commander with a basis for planning operations and for disseminating intelligence to his staff and to other headquarters. It consists of five paragraphs which outline an analysis of the AO, enemy strength, and enemy capabilities that can influence the mission.

It is generally written at division and higher headquarters and briefed down to battalion, although, in a contingency operation, it may be written at the brigade level. It may be presented to the commander formally or informally and may be written or oral, detailed or summarized. However, when possible, a written estimate is preferred.

The intelligence staff officer prepares the intelligence estimate of the enemy situation. An estimate is prepared at the commander's direction or on the intelligence staff officer's initiative.

The intelligence estimate includes—

- ☐ Mission.

- ☐ Area of operations.
- ☐ Enemy situation.
- ☐ Enemy capabilities.
- ☐ Conclusions.

ANNOTATED INTELLIGENCE ESTIMATE FORMAT

(Classification)

Headquarters
Place
Date, time, and zone
Msg Ref No.

INTELLIGENCE ESTIMATE NO. _____
References: Maps, charts, or other documents.
Time Zone Used Throughout the Estimate:

1. MISSION. Restate the mission determined by the commander.

2. AREA OF OPERATIONS. This paragraph discusses influence of the battlefield environment in arriving at conclusions. It is based on the facts and conclusions of IPB and the analysis of the battlefield area, if one has been prepared. It may be a reference to an analysis of the battlefield area, if adequate coverage and discussion are contained therein.

a. Weather.

(1) Existing situation. Include light data and either a weather forecast or climatic information, as appropriate. Use appendixes for detailed information.

(2) Effect on enemy courses of action. Describe the effects of weather on each broad course of action (such as attack or defend). Each description concludes with a statement of whether the weather favors the course of action. Among the courses of action, include use of chemical agents, nuclear weapons, and special methods, techniques, equipment, procedures, or forces.

(3) Effect on own courses of action. Describe in the same manner as for (2) above, except that the estimate excludes the use of biological agents.

b. Terrain.

(1) Existing situation. Use graphic representations, such as IPB templates, where possible. Use annexes for detailed material. Include as much information as necessary for an understanding of observation and fire, concealment and cover, obstacles, key terrain features, and avenues of approach. Include effects of nuclear fires, enemy biological and chemical agents, and any other pertinent considerations on each of these factors as appropriate.

(Classification)

(2) Effect on enemy courses of action. Describe in the same manner as for the effects of weather in a(2) above. For defensive courses of action, state the best defense area and the best avenues of approach leading to it. For attack courses of action, state the best avenues of approach.

(3) Effect on own courses of action. Describe in the same manner as for effects of weather in a(3) above.

c. Other Characteristics. The following additional characteristics considered pertinent are included in separate subparagraphs: sociology, politics, economics, psychology, and other factors. Other factors may include such items as science and technology, materiel, transportation, manpower, and hydrography. These factors are analyzed using the same subheadings as weather and terrain.

3. ENEMY SITUATION. This paragraph gives information on the enemy which will permit later development of enemy capabilities and vulnerabilities and refinement of these capabilities into a specific course of action and its relative probability of adoption.

a. Disposition. Reference may be made to overlays, enemy situation maps, or previously published documents.

b. Composition. Summarize enemy order of battle that can influence accomplishment of the mission. Reference may be made to previously published documents. Special mention is made of units capable of EW, low-intensity operations, and other special operations, as appropriate.

c. Strength. Enemy strength is listed as committed forces, reinforcements, air assets, nuclear weapons, and chemical and biological agents. The purpose of this listing is to assist in developing enemy capabilities and vulnerabilities for use by the commander and staff in selecting courses of action. The unit mission, location of the enemy, enemy doctrine, and the level of command at which the estimate is being prepared are factors to be considered.

(1) Committed forces. List those enemy ground maneuver units currently in contact and those ground maneuver units with which imminent contact can be expected, regardless of the specific friendly course of action implemented. Designation of enemy forces as committed forces depends on disposition, location, controlling headquarters

and doctrine. The intelligence officer usually accounts for committed forces based on the size unit doctrinally used to oppose the friendly unit. Generally, enemy units are counted in terms of units two echelons below the friendly unit's size (for example, a brigade S2 normally considers committed forces in terms of companies; a division G2, in terms of battalions; and a corps G2, in terms of regiments). If there is doubt whether a unit is a committed force or a reinforcement, it is considered a reinforcement. This attributes to the enemy the maximum capability to reinforce forces to oppose a given friendly course of action.

(2) Reinforcements. Include designation and location. Reinforcements are those enemy maneuver units that may or may not be employed against us, depending on our choice of a specific course of action and enemy plans. Reinforcements are enemy units not committed in or out of the friendly sector, but which can react to the friendly course of action, subject to time and distance considerations, in time to influence the accomplishment of the mission. Imminent contact is not expected. Disposition, location, level of control, or other factors at the time of the estimate are considered in determining which enemy forces are reinforcements.

(3) Air. List the number of enemy aircraft by type within operational radius. Include the number of possible sorties per day by type of aircraft, if known.

(4) Nuclear weapons and chemical and biological agents. Estimate, as appropriate, the number, type, yield, and delivery means of enemy nuclear weapons and chemical and biological munitions or agents available to the enemy.

d. Recent and Present Significant Activities. List selected items of information to provide basis for analyses to determine relative probability of adoption of specific courses of action and enemy vulnerabilities. Enemy failures to take expected actions are listed, as well as positive information.

e. Peculiarities and Weaknesses. Based on knowledge of enemy tactical doctrine, practices, the principles of war, the AO, and the enemy situation previously described and discussed, list peculiarities and weaknesses, and briefly describe each, indicating the extent to which they may be vulnerable and how they influence possible friendly courses of action. The items listed are grouped under the headings indicated below. Only pertinent headings are used.

(1) Personnel. An estimate of strength usually is included if less than 80 percent of authorized strength. Status of morale is included, if known.

(2) Intelligence. An estimate of enemy intelligence success, ineffectiveness, and susceptibility to deception and detection is usually included.

(3) Operations. An estimate of combat effectiveness is usually included if less than excellent.

(4) Logistics. An estimate of the enemy's capability to support their forces logistically is included if there are apparent weaknesses.

(5) Civil-military operations. An estimate of the attitudes of the enemy and the civilian populace and the status of food supply, medical facilities, communications, and other critical resources is usually included.

(6) Personalities. An estimate of the capabilities and or weaknesses of the enemy commander and principal staff officers usually is included.

4. ENEMY CAPABILITIES. Based on all the previous information and analyses, develop and list enemy capabilities. The listing provides a basis for analyzing the available information to arrive at those capabilities the enemy can adopt as specific courses of action and their relative probability of adoption.

a. Enumeration. State what, when, where, and in what strength for each capability.

b. Analysis and Discussion. To provide a basis for conclusions of enemy capabilities and their relative probability of adoption, each capability, or appropriate combination thereof, is discussed in a separate subparagraph. Consideration of enemy deception measures is included. All the pertinent previous information and conclusions are tabulated as either supporting or rejecting the adoption of the capability. After listing all the evidence, each capability is judged from the enemy point of view of whether the adoption of the capability is advantageous to the enemy. Such judgments need not be made if the conclusion is obvious or if there is no evidence that the enemy will adopt the capability, except when the capability is one that will make the accomplishment of the friendly mission highly doubtful or impossible. This exception is to focus attention on dangerous threats.

(Classification)

(Short title identification)

5. CONCLUSIONS. Based on all the previous information and analyses, conclusions are stated concerning the total effects of the AO on friendly courses of action; the courses of action most likely to be adopted by the enemy, including their relative probability of adoption; and the effects of enemy vulnerabilities that can be exploited. These conditions assist in the selection of a friendly course of action.

a. Effects of Intelligence Consideration on Operations. Indicate whether the mission set forth in paragraph 1, above, can be supported from the intelligence standpoint. Indicate which courses of action can best be supported.

b. Effects of the AO on Own Courses of Action. For attack courses of action, indicate the best avenues of approach. For defensive courses of action, indicate the best defense areas and the best avenues of approach leading to and into the defense areas. (This subparagraph is omitted if the discussion of the effects of the area on own courses of action in paragraph 2 has been omitted because of the availability of a current analysis of the AO.)

c. Probable Enemy Courses of Action. List courses of action in order of relative probability of adoption. A listed course of action may include several subordinate courses of action that can be executed concurrently. Usually, no more than two or three courses of action, in order of probability of adoption, can be justified by the available evidence.

d. Enemy Vulnerabilities. List the effects of peculiarities and weaknesses that result in vulnerabilities that are exploitable at own, higher, or lower levels of command. The order in listing these vulnerabilities has no significance.

/s/ _____
(Designation of staff officer)

Annexes (as required)
Distribution:

(Classification)

SAMPLE DIVISION INTELLIGENCE ESTIMATE

(Classification)

Copy ___ of ___ Copies
G2 Section, 52d Division (Mech)
GLENVILLE (NF3277), EASTLAND
230830Z June 19__

INTELLIGENCE ESTIMATE NO. 20
Reference: Map, series EASTLAND, sheets DELTA through KILO, edition 2, 1:50,000

1. MISSION. 52d Division defends along DRY CREEK, and accepts no penetration south of hills 333 and 121, prepares to conduct offensive operations within 12 hours.

2. BATTLEFIELD AREA OF OPERATIONS

a. Weather.

(1) Existing situation. Weather for the period 23 June to 28 June will be rainy and cool, gradually warming and clearing as a high pressure system moves through the area of operations from the south. Temperatures from 40° to 65°F. Visibility will range from 16 to 25 kilometers, except during precipitation and in morning fog in low drainage areas. Surface winds from the south at 8 to 10 knots.

Date	BM-NT	BM-CT	EE-CT	EE-NT	Moon-rise	Moon-set
23 June	0331	0419	2029	2130	1746	0125
25 June	0339	0422	2025	2124	1907	0214
27 Jun	0344	0425	2022	2118	2001	0518
29 Jun	0349	0428	2018	2112	2022	0820

(2) Effects on enemy courses of action:

(a) Precipitation will not hinder cross country movement except in the low drainage areas of MINERTOWN.

(b) Southerly winds will not affect enemy employment of NBC.

(c) Low visibility during precipitation and morning fog will favor enemy attack.

(Classification)

(3) Effects on friendly courses of action:

(a) Precipitation will not hinder cross country movement except in the low drainage areas of MINERTOWN.

(b) Southerly wind direction will not affect friendly use of chemical or nuclear weapons.

(c) Low visibility during precipitation and morning fog will not favor friendly defense.

b. Terrain.

(1) Existing situation.

(a) Cover and concealment. Wooded areas around MIDWAY offer good concealment. Numerous ravines in drainage areas of MINERTOWN offer limited cover and concealment.

(b) Observation and fire. There are good observation points along bluffs above GRINGO River. Fields of fire are excellent throughout plains areas north of MUD CREEK but limited moderately in populated and vegetated areas near GLENVILLE.

(c) Obstacles.

1 SWIFT River (fordable 1 kilometer east of GLENVILLE).

2 Bluffs above GRINGO River.

3 City of GLENVILLE. Routes around city are passable; routes through city impassable.

(d) Key terrain. Hill mass MUKELROY and HILL 333.

(e) Avenues of approach.

1 Available to the enemy into our sector:

a Avenue of approach 1 is from LARGO through gap around the northeast end of HILL 702, 34 kilometers southwest to MINERTOWN and south to DRY CREEK.

b Avenue of approach 2 is from LARGO southeast through MIDWAY to river crossing east of GLENVILLE.

(Classification)

2 Avenue of approach available for US movement into the enemy's area will be generally the same as those listed for enemy into our sector.

(2) Effect on enemy courses of action. Terrain favors the enemy attack using avenue of approach 1.

(3) Effect on friendly courses of action. Terrain favors our defense of the area around DRY CREEK.

c. Other Characteristics.

(1) Existing situation. Local nationals throughout the area favor friendly military operations. Large numbers of refugees can be expected to pass through friendly lines.

(2) Effect on enemy courses of action. The enemy can be expected to insert infiltrators as refugees.

(3) Effect on friendly courses of action. Refugees can be expected to provide valuable intelligence.

3. ENEMY SITUATION.

a. Disposition. Annex A, Situation Overlay.

b. Composition. Enemy forces opposing 52d Division consist of elements of the 4th Combined Arms Army.

(1) Identified units are:

(a) 10th MRD consisting of:
27th MRR
30th MRR
31st MRR
121st Tank Regiment (unlocated)

(b) 19th Mechanized Division consisting of:
23d MRR
37th Tank Regiment

(Classification)

(Classification)

(2) Unidentified units are: 2 x U/I MRR of 19th MRD.

c. Strength.

(1) Committed forces. 52d Division (Mechanized) is opposed immediately by four mechanized battalions and one tank battalion. These units are supported by normal divisional and regimental artillery groups.

(2) Reinforcements. Reinforcements available to the enemy for commitment in our zone are a total of five MRB and four tank battalions from the 27th MRR, 121st Tank Regiment, and the second-echelon battalions of the 30th and 31st MRRs and the 37th Tank Regiment. Also, the 23d MRR can totally reinforce within 8 hours from start of movement.

(3) Air. Enemy is supported by the 3d Air Army consisting of unidentified numbers of fighter-bomber aircraft, ground attack aircraft, and reconnaissance aircraft. Air parity currently exists with either force capable of obtaining air superiority for limited periods of time. Up to now enemy has used a maximum of 60 fighter-bomber sorties in a 12-hour period.

(4) Nuclear. No estimate of the enemy's nuclear support for the next 30 days is available. Enemy currently has 152mm Gun-Howitzers with nuclear rounds and SSMs which can deliver rounds of 10- to 50-kt yield within range of our division.

d. Recent and Present Significant Activities.

(1) Air reconnaissance and photography reports indicate increased enemy movement along axis BRAVO to LIMO. Movement indicates reinforcement of forward element of 4th CAA.

(2) Enemy's aerial reconnaissance and tactical air flights have increased in the last 36 hours, particularly along the line of contact.

(3) For the past 36 hours, volume of vehicular traffic has increased in southerly direction.

(4) Artillery fire from the enemy has become more intensive in the last 24 hours.

(5) Reliable source reports large tracked, amphibious vehicles moving into area vicinity HILL 805.

(6) Enemy has begun to employ smoke along the forward slope of HILL 702.

e. Peculiarities and Weaknesses.

(Classification)

(Classification)

(1) Personnel. Enemy units are currently estimated to be at 85 percent to 90 percent authorized strength. Morale is high, although replacements may not be highly trained.

(2) Intelligence. Enemy stresses communications security and subordinate units of the 4th CAA have recently initiated intensive radio security and procedures training.

(3) Operations.

(a) Enemy is susceptible to mine warfare and antitank weapons.

(b) Enemy has trained heavily on attack formations and has been told offensive action is the only way to victory.

(c) Enemy is vulnerable to nuclear weapons due to massed forces and canalization by further advancement.

(4) Logistics. Supplies are adequate for the enemy's conduct of either the offense or defense. The enemy had previously stockpiled supplies well forward in division areas.

(5) Personalities. G/D Masonski, CG of the 10th MRD, is an advocate of penetration type offense on a narrow front with subsequent widening of the gaps to split enemy forces.

4. ENEMY CAPABILITIES.

a. Enumeration:

(1) Attack at any time along avenue of approach 1 with four MRBs and one tank battalion supported by normal divisional and regimental artillery groups.

(2) Attack at any time along avenue of approach 2 with four MRBs and one tank battalion supported by normal divisional and regimental artillery groups.

(3) Defend at any time with forces in contact supported by all available divisional and regimental artillery groups.

(Classification)

(4) Reinforce his attack or defense with all or part of the following units at the places and times indicated:

	UNIT	PLACE	TIME
(a)	30th MRR(-)	Avenue of approach 2	immediately
(b)	31st MRR(-)	Avenue of approach 1	immediately
(c)	37th Tank Regiment(-)	Avenue of approach 1	immediately
(d)	27th MRR	Avenue of approach 1 or 2	2 hours after start of movement
(e)	23d MRR	vic LITTLE	8 hours after start of movement
(f)	121st Tank Regiment	Unlocated	Unknown
(g)	U/I MRR of 19th MRD	vicinity BRAVO	9 hours after start of movement

(5) Delay in successive positions to the east of LITTLE.

(6) Employ chemical agents within our sector at any time.

(7) Employ nuclear weapons of a 0.5- to 50-kt yield with delivery by artillery or SSM.

(8) Employ guerrilla forces in our rear area either alone or in conjunction with the capabilities enumerated below.

(9) The enemy can attack our area with an undetermined number of fighter, ground attack, and bomb sorties daily. The maximum number of daily sorties mounted in our area has been 60.

b. Analysis and Discussion.

(1) Attack along avenue of approach 1.

(a) The following indicate adoption of this capability:

1 Uses a good avenue of approach.

(Classification)

2 The enemy is massing mechanized elements, tanks, artillery and logistic support along this avenue.

3 Forward elements disposed on a relatively narrow front.

4 Extensive artillery preparation along approach.

(b) The scant cover presented along this avenue of approach is a limiting factor but does not preclude adoption of this capability.

(2) Attack along avenue of approach 2.

(a) The following indicate adoption of this capability:

1 The enemy is massing mechanized elements, tanks, artillery and logistic support along this avenue.

2 Forward elements disposed on a relatively narrow front.

3 Extensive artillery preparation along this avenue.

(b) The following indicate rejection of this capability:

1 This avenue of approach accommodates only one deployed regiment and offers limited cover and concealment.

2 The limited obstacle presented by GLENVILLE.

(3) Defend. The following indicate rejection of this capability:

(a) The enemy is massing his forces along the line of contact.

(b) Enemy has followed known doctrine for attack.

(c) Terrain favors attack.

(4) Reinforce. The following indicates adoption of this capability:

(a) Movement of additional troops toward the front.

(b) New units identified in the combat zone.

(c) Forward logistical buildup.

(Classification)

(5) Delay. There are no indications of the enemy's adoption of this capability.

(6) Employ chemical agents. There is no indication the enemy will employ chemical agents other than smoke.

(7) Employ nuclear weapons. There is no indication the enemy will employ nuclear weapons.

(8) Employ guerrilla forces. The following indicates adoption of this capability:

(a) Doctrine calls for use of guerrilla force.

(b) Use would enhance enemy advance by creating panic and confusion.

(9) Air attack. Indications are that enemy will continue to employ this capability as referenced in paragraph (9) above.

5. CONCLUSIONS.

a. Intelligence. Available intelligence indicates that the division can accomplish its mission. Intelligence supports adoption of the division course of action.

b. Weather and Terrain. The weather and terrain favors our defense. The best defensive area is the high ground east of DRY CREEK. The best avenue of approach into our defensive sector is avenue of approach 1.

c. Probable Courses of Action.

(1) Attack with forces in contact supported by air and artillery with the main attack of one motorized rifle regiment along avenue of approach 1. Will reinforce with elements as indicated in para 4a(4).

(2) Conduct secondary attack with forces in contact supported by air and artillery with one motorized rifle regiment along avenue of approach 2.

(3) Employ guerrilla or special forces in our rear areas in conjunction with the above courses of action.

(Classification)

(Classification)

d. Vulnerabilities.

(1) The enemy is vulnerable to counterattack since he has been slow to exploit potential penetrations.

(2) Vulnerable to nuclear attack due to massing of troops and concentrated logistics depots.

(3) Mine warfare will be effective against mechanized elements.

KROOK

BG

OFFICIAL:

/s/ Bagger

BAGGER

G2

Annex: A--Situation Overlay (omitted)
Distribution: A

(Classification)

(Classification)

INTELLIGENCE ANNEX

The intelligence annex disseminates nformation about forces essential to the conduct of the operation. It also gives any other necessary intelligence orders or guidance for the operation in question. In addition, the intelligence annex serves as a nedium for instructing subordinate commanders to acquire information necessary for the conduct of the operation. Such nformation often can only be obtained mmediately before, or during, the operation tself. The intelligence annex is not a substitute for an intelligence collection plan.

The intelligence annex is a formal intelligence tasking document that may accompany an OPLAN or OPORD. It should be as brief as possible, consistent with clarity. Its first paragraph gives a summary of the enemy situation necessary to understand the plan or order and may refer to annotated maps, enemy situation overlays, or current INTREPs. Subsequent paragraphs contain specific collection requirements and instructions. SOP information should not be repeated in the intelligence annex. The format for an intelligence annex is on the following pages.

INTELLIGENCE ANNEX FORMAT

(Classification)

(Change from oral orders, if any)

Copy no. ___ of ___ Copies
Issuing headquarters
Place of issue (may be in code)
Date-time group of signature
Message reference number

ANNEX ___ (INTELLIGENCE) to OPERATION ORDER NO.___.
References: Maps, charts, and other relevant documents.
Time Zone Used Throughout the Order: ZULU

1. SUMMARY OF ENEMY SITUATION. Information about enemy forces essential in implementing the operation plan. When the amount of details makes it appropriate, a brief summary and reference to the appropriate intelligence document, or appendix to the annex, may be used. Reference to documents not included in the annex should not be made when they are not available to all recipients of the annex.

2. INTELLIGENCE REQUIREMENTS. List each PIR in a separate subparagraph. If a priority has been assigned to the PIR list in order, so state. In a final subparagraph, list information requirements, if any. If an intelligence annex is not prepared or is distributed separately from the basic order, PIR should be listed in the coordinating instructions subparagraph of the operation order.

(Classification)

(Classification)

3. INTELLIGENCE ACQUISITION TASKS.

a. Orders to Subordinate and Attached Units. List, by unit, in a separate numbered subparagraph detailed instructions for reports required by the issuing headquarters. Units are listed in the same order as they are listed in the operation order.

b. Requests to Higher, Adjacent, and Cooperating Units. List in a separate numbered subparagraph requests for information from units not organic or attached.

4. MEASURES FOR HANDLING PERSONNEL, DOCUMENTS, AND MATERIEL. This paragraph contains instructions about the operation that are not contained in the SOP or that modify or amplify the SOP for the current operation. Examples include--

a. EPWs, Deserters, Repatriates, Inhabitants, and Other Persons. Special handling and segregation instructions. Location of EPW collection point as provided by the provost marshal.

b. Captured Documents. Instructions for handling and processing of captured documents from time of capture to receipt by specified intelligence personnel.

c. Captured Materiel. Designation of items or categories of enemy materiel for examination, and specific instructions for their processing and disposition.

5. DOCUMENTS OR EQUIPMENT REQUIRED. This paragraph lists, in each category, the conditions under which certain documents or equipment required by or allocated to units can be obtained or requested. Items may include air photographs and maps.

6. COUNTERINTELLIGENCE.

a. This paragraph is covered largely by SOP. Many special operational instructions having counterintelligence aspects are listed in the operation order or in other annexes.

b. Certain instructions and procedures on the conduct of special personnel in the operation may require limited dissemination on a need-to-know basis; therefore, a special counterintelligence measures appendix may be prepared for a limited and specified number of addresses.

(Classification)

(Classification)

7. REPORTS AND DISTRIBUTION. This paragraph may be covered largely by SOP. It stipulates the conditions (for example, dates, number of copies, issue) regulating the issue of intelligence reports to the originating command for the duration of the operation. Any or all of the following items may be covered in this paragraph:

a. Period to be covered by routine reports and distribution.

b. Routine and special reports that differ from SOP required from subordinate units.

c. Periodic or special conferences of intelligence officers.

d. Distribution of special intelligence studies, such as defense overprints, imagery analysis reports, and order of battle overlays.

e. Special intelligence liaison, when indicated.

8. MISCELLANEOUS INSTRUCTIONS (if required). List here, under special subparagraphs, necessary items that are not covered above or in SOPs, or which require action different from that detailed in SOPs.

Acknowledge

Last name of commander
Rank

Authentication:
Appendixes:
Distribution:

(Classification)

ANALYSIS OF THE BATTLEFIELD AREA

The analysis of the battlefield area is a study to determine the effects of the battlefield area on the general course of action that the enemy and friendly forces may adopt. It includes consideration of climatic or weather conditions, relief and drainage systems, vegetation, surface materials, man-made features, military aspects of the area, observation and fire, concealment and cover, obstacles, key terrain, avenues of approach, air avenues of approach, and other effects of the area on CSS in the battlefield area. Additional considerations include sociological, political, economic, religious, scientific and technological, material transportation, and hydrographic factors as they may affect enemy or friendly military operations. An analysis of the battlefield area is prepared at all echelons.

ANNOTATED EXAMPLE OF ANALYSIS OF THE BATTLEFIELD AREA

(CLASSIFICATION)

Copy no. 2 of copies
52d Mech Div
KELLY (8831)
121530 S July 19
SB2

ANALYSIS OF AREA OF OPERATIONS NO. 6
Reference: Map, series CSM 01, WESTLAND, sheet 1 (EBEL), edition 1974, 1:50,000

1. PURPOSE AND LIMITING CONSIDERATIONS

a. Purpose. To analyze and evaluate the area east of CARTERSBERG (9297) from the general area of OVERLOOK Ridge (9406) south to the ERIE Canal within the divsion zone.

b. Mission. Division attacks 140900 July, secures high ground from Hill 322 (1394) to Hill 305 (0490) to deny the enemy a bridgehead, and prepares to cross the ERIE Canal and continue the attack to the south.

2. GENERAL DESCRIPTION OF THE AREA

a. Climate or Weather Conditions.

(1) Climate. Annex A (Climatic Summary).

(2) Weather. Weather forecast, 12-16 July.

(a) Precipitation. None predicted.

(b) Fog None predicted.

(c) Temperature. Range from 70° to 86°F.

(d) Wind. Surface winds from north, 9 to 17 knots per hour.

(e) Cloudiness. None predicted.

(f) Atmospheric pressure. Average about 980 millibars.

(g) Moon. New moon, 25 July.

(h) Light data.

Date	BMNT	BMCT	EECT	EENT	Moonrise	Moonset
13 July	0232	0440	1933	2138	2024	0608
14 July	0233	0442	1932	2138	2050	0714
15 July	0234	0444	1931	2137	2114	0806
16 July	0235	0446	1930	2137	2137	0901

b. Terrain.

(1) Relief and drainage systems. Annex B (Relief Overlay), Annex C (Drainage Overlay), and Annex D (Slope Overlay). Area is drained by the MAINE River on the west and southwest and the SOUTH River on the northeast. The northwest to southeast ridge running from Hill 351 (9807) to ALBANY (3960) generally bisects the area. The major spurs of this ridge run generally east and west. The terrain is generally rolling with a series of sharply rising table lands. The MAINE and SOUTH Rivers and the ERIE Canal are unfordable. The MAINE River south of CARTERSBERG averages about 30 meters in width and 2 meters in depth. The SOUTH River averages about 15 meters in width and about 2 meters in depth. The ERIE Canal has steep banks and averages about 3 meters in depth and is about 17 to 21 meters in width at the top of the banks. All other rivers and streams are fordable, varying in width from about 1 to 7 meters, with an average depth of 40 centimeters.

(2) Vegatation. Annex E (Vegetation Overlay) and Annex F (Vegatation Impeding Movement Overlay). Vegetation consists of growing crops, vineyards, pasturelands, orchards, and wooded areas. Hay, wheat, and vegetables are the main crops. Most crops are completely cut by the end of September. Wheat is grown mostly on open-topped tablelands. Vineyards are generally terraced and on the slopes of hills. Most woods in the area are deciduous trees about 25 centimeters in diameter and approximately 10 to 12 meters apart. Underbrush has been cleared throughout the area. Logging operations throughout the forest in vicinity of 9306 have thinned the tree stand to an average density of 90 trees per hectare. Roads and streambanks are generally bordered with trees. Small, scattered patches of trees are found in the lowland plains. Wooded areas restrict, but do not preclude, the employment of armor.

(CLASSIFICATION)

EXPLANATION

Classification is centered at the top and bottom of each page.

Copy number assigned by issuing headquarters. Official designation of unit. Physical location of command post by coordinates, state, or county.

Date-time group when the analysis is signed followed by the message reference number (example: SB2) used when the analysis is distributed *outside* the headquarters for the purpose of acknowledgment in the clear. All appended material to the analysis having the same distribution bears the same reference number.

The title line identifies the analyses by number (consecutive throughout the calendar year).

References list maps, charts, or other documents required to understand the analysis. References to maps include the map series number (country or geographic area, if required), sheet number (and name, if required), edition and scale (if required).

Paragraph 1a states the exact limits of the area being studied.

Paragraph 1b states the mission and any other limiting considerations such as time limitations, the commander's plan of action, and enemy capabilities.

Paragraph 2 is listing of pertinent facts for use as a basis for the succeeding paragraphs.

Paragraph 2a lists or refers to other documents containing (for the period under study) meteorological conditions to include precipitation, fog, cloud conditions, temperature, relative humidity, surface winds, effective winds (or winds aloft), atmospheric pressure, light data to include moon phases, moonrise and moonset, and other geodetic data as appropriate. When appropriate, include magnetic phenomena.

Paragraph 2a(2) lists data to be considered by aviation units. It is used in calculating aircraft performance and altimeter setting. Light data are always given, as they are necessary for the selection of courses of action. The beginning morning nautical twilight (BMNT) and the end of evening nautical twilight (EENT) are the begining and end, respectively, of enough light for limited visibility. The beginning of morning civil twilight (BMCT) and the end, of evening civil twilight (EECT) are the beginning and end, respectively, of adequate light for large-scale operations.

Paragraph 2b(1) describes configuration of the ground, including slopes, for personnel and vehicles and critical relief for equipment dependent on line of sight. Configuration and conditions of streams, including depth, slope, and condition of banks and bottom, and location of crossing sites. Named localities are located by grid coordinates the first time they appear in the analysis. Grid coordinates are repeated only if required for ease of reference.

Paragraph 2b(1) also makes maximum use of special colored maps or overlays. Under each characteristic, include facts to assist in subsequent determination of the effects of the characteristic on the use of nuclear weapons, chemical agents, and important devices and equipment used in implementing courses of action (do not include here the interpretation of these effects on friendly or enemy possible courses of action).

Paragraph 2b(2) indicates wooded areas, including type, location, size, and shape of trees, diameter of trunks, density, crown cover, and undergrowth include types of natural and cultivated vegetation of nonwooded areas.

ANNOTATED EXAMPLE OF ANALYSIS OF THE BATTLEFIELD AREA

(CLASSIFICATION)

(3) Surface materials. Annex G (Soils Overlays). Surface in most of the area consists of thick clay-like soil n a hard limestone or limy shale base. Above 200 meters elevation, with but few exceptions, the soil is firm and apable of supporting heavy wheeled and tracked vehicles even where under cultivation. The rains do not eriously affect trafficability at this time of year. The soil is generally wet in stream bottoms and in the lowlands elow 200 meters elevation. While capable of supporting light tracked or wheeled vehicles, the soil becomes ongy and boggy where the turf has been destroyed.

(4) Man-made features. Annex H (Built-up Areas and LOC Overlay). A double-track railroad crosses the ea from CARTERSBERG to the east. A single-track railroad runs from NOME (9619) to CARTERSBERG, cross- g the MACON saddle (9608). A double-track railroad from the west parallels the south bank of the ERIE Canal s far as DAWSON (0489). The area is covered with an extensive network of principal and secondary roads. Prin- pal roads radiate from CARTERSBERG. Roads across OVERLOOK Ridge (9406) from north to south have been proved. National highways are at least 6 meters wide. All bridges on regularly maintained roads are two-way ass 50. Villages consist of closely grouped buildings of brick or stone. The enemy has constructed extensive eld fortifications and artificial obstacles throughout the area he occupies north of the ERIE Canal. The artificial bstacles consist primarily of minefields and wire and are most extensive in the SOUTH River valley and in the eneral area of ATHENS (0194) and AUBURN (0495).

c. Other Characteristics.

(1) Sociology. The area is generally rural. The farm villages have a present population of from 50 to 100 each. urrent population of CARTERSBERG is estimated at 50,000, and population of HARLOW is estimated at 5,000. he population is primarily Caucasian; farming is the principal occupation. Principal crops are wheat, corn, cot- n, and grapes.

(2) Economics. Little food and few supplies are available because the enemy has taken food and materials to pport his forces. However, some grain crops remain in fields and can be harvested at a later date if protected.

(3) Government. There are civil agencies that are prepared to take over functions of civil government as the ountry is recaptured.

(4) Psychology. The confiscation of food and supplies and the impressing of civilian labor have made the eople extremely hostile toward the enemy. Acts of sabotage occur frequently in the Army's rear area.

MILITARY ASPECTS OF THE AREA

a. Tactical Aspects.

(1) Observation and fire. Annex I (Horizontal Visibility Overlay).

(a) Weather conditions. Annex J (Fog Overlay). Weather permits good air and ground observation. ontinued dry weather will increase dust clouds caused by nuclear weapons. Observation will be reduced for a nger period of time in nuclear target areas. Weather favors our, but not enemy's, use of smoke.

(b) Relief. The high ground now held by the enemy affords him excellent observation over approaches nto his position. The enemy-held hills west of the MAINE River dominate the western part of the area. High round vicinity BALDA'S PEAK (0004) provides the enemy with excellent observation to the northeast, east, and outh. The division objective, with the spur extending north from 1395 to 1004, provides the enemy with excellent bservation over all approaches leading directly to it. Fields of fire within the area for flat-trajectory weapons are enerally good but short, except in valley bottoms and from the military crests of open hilltops where they are enerally excellent. Fields of fire on the northern slopes of OVERLOOK Ridge and Hill 351 are excellent and favor nemy defense. Fields of fire from the northern slopes of the division objective are excellent. Long-range fields of re to the south from OVERLOOK Ridge are good and favor our attack. Fields of fire for high-angle weapons are ood throughout the area.

(CLASSIFICATION)

EXPLANATION

Paragraph 2b(3) indicates the type and distribution of soils and subsoils in the area and soil trafficability. Include soil content as it affects induced radiation. Use overlay if material is extensive.

Paragraph 2b(4) indicates roads, railroads, bridges, tunnels, mines, towns, industrial areas, fortifications, and other features of military significance; include type of construction.

Paragraph 2c(1), (2), . . . consider as pertinent in separate subparagraphs sociology, politics, economics, psychology, and other characteristics. Other characteristics may include such items as science, materiel, transportation, manpower, hydrography, etc. Under each of these characteristics considered, list all facts as they pertain to the area of study and which may influence friendly and enemy courses of action. The degree of coverage required of these characteristics varies with the mission and other aspects of the operational environment. These characteristics influence, to some extent, the decisions of all commanders and become increasingly important as the area of interest of a command increases.

Paragraph 3 analyzes the facts in the previous paragraph to determine their influence on factors affecting tactical and combat service support activities that are considered in the development of specific courses of action. The extent of the analysis depends on the mission, the means available to accomplish the mission, and the possible means the enemy can use to prevent the accomplishment of the mission. In considering the factors under each aspect, include the effects, as appropriate, of and on nuclear fires, chemical and enemy biological agents, and important devices and equipment used in implementing courses of action.

Paragraph 3a considers the effect that the area will have on observation, fire, concealment and cover, and obstacles; and detemines key terrain features and avenues of approach.

Paragraph 3a(1) indicates graphically or describes the influence of weather, relief, vegetation, surface materials, man-made features, and other pertinent characteristics. Effects of and on nuclear fires, chemical agents, and so forth are included as are any marked effects on surveillance devices equipment based on line of sight, and fire delivery means. Effects on fire include effects on delivery means, fields of fire, and effectiveness of fires. Observation and fire are of concern to combat service support units as they influence rear area security.

ANNOTATED EXAMPLE OF ANALYSIS OF THE BATTLEFIELD AREA

(CLASSIFICATION)

(c) Vegetation. The NATIONAL Forest from 0306 to 0597 severely restricts observation and fields of fire in the eastern parl of the area. Within all wooded areas fields of fire for flat-trajectory weapons are restricted in forest trails and roads. Fields and tree blowdown in woods, caused by nuclear weapons, may restrict fields of fire within woods. Wheat fields severely restrict ground level observation at this time of the year. Forest fire smoke clouds may reduce observation throughout the area.

(d) Man-made features. Church steeples in the numerous villages afford excellent observation points. Villages and farm buildings will limit fields of fire for flat-trajectory weapons.

(2) Concealment and cover.

(a) Relief. The rolling nature of the terrain affords some degree of cover and concealment from ground observation. Cover and concealment are poor on the northern slopes of OVERLOOK Ridges and Hill 351. On the southern slopes of OVERLOOKING Ridge, cover and concealment are good. The rolling nature of the terrain and numerous folds in the ground will reduce thermal effects of nuclear bursts.

(b) Vegetation. Annex K (Canopy Closure Overlay). NATIONAL Forest offers excellent cover and concealment for large units. Woods throughout the area afford excellent concealment and protection from thermal effects because of the thick deciduous trees being in full leaf. Wheatfields also afford some degree of concealment.

(c) Man-made features. Buildings in the area offer some cover from small arms fire and shell fragments, but do not protect from blast to any significant degree.

(3) Obstacles. Annex L (Combined Obstacles Overlay).

(a) Relief. Terrain favors enemy use of persistent chemicals in the valley forward of his present position. Drainage system consists of the MAINE and SOUTH Rivers.

(b) Vegetation. Woods, especially the NATIONAL Forest, will restrict the cross-country mobility of all vehicles, including tracklaying vehicles. They will become severe obstacles in the event of blowdown by blast or if set afire. Cultivated areas will limit wheeled vehicles. Terraced vineyards on the south slopes of OVERLOOK Ridge BALD'S PEAK, and the plateau at 9400 northeast of CARTERSBERG will restrict the movement of tanks and heavy vehicles to road and trails in those areas.

(c) Surface materials. Annex M (Weather Effects on Cross Country Movement Overlay). The soil is generally wet in areas below 299 meters elevation. This will magnify the cratering effects of subsurface nuclear bursts in these locations. While capable of supporting light tracked or wheeled traffic, the soil becomes spongy and boggy where the turf has been destroyed. Soil composition does not favor the production of high intensities of radio activity.

(d) Man-made features. The enemy has constructed extensive artificial obstacles consisting of minefields and wire, particularly on the east flank and north of Hill 305 (0490). This will hinder movements and limit use of certain avenues of approach in these areas. Buildings and villages do not present significant obstacles even if destroyed by blast, except for the suburbs of CARTERSBERG on the east bank of the MAINE River.

(4) Key Terrain features.

(a) Hill 351 (9807) and OVERLOOK Rigde west thereof. These terrain features control the avenues of approach in the western and central parts of our zone. The mission will be seriously jeopardized if these areas are not secured.

(b) Hill 359 (0004). This hill mass dominates the central and eastern avenues af approach. Its seizure is essential to the integrity and security of our forces, and will facilitate fire and maneuver to the south.

(CLASSIFICATION)

EXPLANATION

Paragraph on cover and concealment, indicates graphically or describes the influence of weather, relief, vegetation, and man-made features. Effects of and on nuclear fires, surveillance devices, chemical and enemy biological agents, and so forth are included as appropriate. The discussion is oriented not only on protection of own and enemy forces, but also on other operations to include use of guerrillas, infiltration and counter infiltration, deception, counterinteiligence, armor, and artillery. It is also oriented on site requirements for combat service support and tactical installations. Include only marked effects that help in selection of friendly and enemy courses of action.

Paragraph on obstacles indicates graphically or describes all natural and artificial obstacles and the influence of relief, weather, vegetation, surface materials, and man-made features. Effects, as appropriate, of and on nuclear fires, chemical and enemy biological agents, and effects on trafficability and accessibility are included. If of significant influence, the effect of each obstacle on possible friendly and enemy courses of action is indicated. Obstacles and trafficability influence site locations for combat service support units.

Paragraph 3a(4) describes key terrain features based on the analysis of observations and fire, concealment and cover, obstacles, and mission. Any locality or area the seizure, retention, or control of which affords a marked advantage to either force is considered. The influence of each key terrain feature listed is discussed briefly. The discussion is oriented toward subsequent development of friendly and enemy courses of action. Key terrain features selected are revised as required by the commander's decision and current situation. Key terrain features may be omitted when the enemy has no capability to secure or control terrain features that will materially affect the accomplishment of the mission.

ANNOTATED EXAMPLE OF ANALYSIS OF THE BATTLEFIELD AREA

(CLASSIFICATION)

(c) Hill 334 (9400). This plateau controls the avenues of approach in the western part of the division zone. It is key terrain if our tactical plans call for either a main attack or a supporting attack in the area.

(d) Hill 306 (9997). This hill provides dominant observation over a wide area in this part of the division zone. Its seizure and control will greatly enhance the security, fire, and maneuver of any of our forces attacking in this area.

(e) Hill 326 (1199). This hill dominates favorable terrain leading directly to the eastern part of the division objective.

(f) Hills 305 (0490) and 322 (1394). This terrain system constitutes the division objective. The mision cannot be accomplished without securing it. Control of this ridge is also necessary to continuation of the attack to the south.

(5) Avenues of Approach. Annex N (Avenues of Approach Overlay).

(a) Available to enemy into our position.

1. Axis Hill 351 (9807)-Hill 361 (9709).
2. Axis Hill 339 (9206)-Hill 358 (9310).
3. Axis Hill 280 (0010)-PARIS (9811)-Hill 345 (9613).

(b) Available to us into the enemy's position.

1. Axis Hill 358 (9310)-Hill 339 (9206)-Hill 334 (9400)-Hill 306 (9997)-Hill 305 (0490)-ridge east thereof (Avenue A).

2. Axis Hill 361 (9709)-Hill 351 (9807)-Hill 359 (0004) AUBURN (0495)-ridge Hill 305 (0490) to Hill 322 (1394)) (Avenue B).

3. Axis Hill 361 (9709)-Hill 351 (9807)-Hill 359 (0004)-Hill 271 (0702)-Hill 326 (1199)-Hill 322 (1394)-ridge west thereof (Avenue C).

4. Axis Hill 280 (0010)-Hill 282 (0803)-Hill 326 (1199)-Hill 322 (1394)-ridge west thereof (Avenue D).

b. Combat Services Support Aspects.

(1) Personnel. Characteristics of the society are such that only unskilled civilian labor will be available at any time. Employment of civilian labor to meet short-term objectives must be balanced carefully against the long-term needs for harvesting remaining crops.

(2) Logistics. Lack of civilian food and supplies may impose added logistic burdens on our forces. Some pilferage can be expected. Few resources beyond basic natural resources are available for military use.

(3) Civil-military operations. Displacement of civilians through the impressing of civilian labor by the enemy and the lack of food and supplies will create problems which, if not controlled, can impact on military operations. The existence of civil agencies capable of assuming the functions of goverment will help alleviate the problem. However, these agencies will require guidance.

4. EFFECTS OF CHARACTERISTICS OF THE AREA

a. Effect on Enemy Courses of Action.

(1) Effect on enemy defense.

(a) Terrain now held by the enemy favors defense in depth from his present positions to the division objective. The enemy has excellent observation over all avenues of approach, and his flanks are protected by the rivers and canal on the west and artifical obstacles on the east. His best defense areas are the forward positions that he now occupies.

(b) The excellent weather conditions favor enemy defense and will permit him to use his supporting fires with maximum effectiveness.

(2) Effect on enemy attack.

(a) The enemy's best avenue of approach is the axis Hill 280 (0100)-PARIS (9811)-Hill 345 (9613).

(b) Weather conditions are such that he will not be able to maneuver toward our positions without being observed except during the hours of darkness. The lack of precipitation favors cross-country mobility.

(CLASSIFICATION)

EXPLANATION

Paragraph 3a (5) describes the avenues of approach that are developed from all the previous analyses of the tactical aspects. Such development does not consider the disposition of the enemy forces. An avenue of approach must afford some facility of movement and room for adequate dispersion for a force large enough to have significant effect on the outcome of the operation. When either opposing force has available and adequate number of aircraft that can be used to deploy troops and equipment forward to the battle area and significantly affect the accomplishment of the mission,air avenues of approach are listed. If terrain and weather conditions do not significantly influence choice of flightpaths, then air avenues of approach are not listed. Enemy avenues of approach are listed first, followed by a list of avenues of approach into the enemy battle area. When the opposing forces are not in contact, or when only security forces are in contact, avenues of approach to the battle area for both forces are listed. Each listing of an avenue of approach is accomplished by a brief discussion to provide a basis for subsequent development of possible courses of action by either force. For combat service support units, the discussion of avenues of approach is based on rear area security requirements.

Paragraph 3b analyzes the facts listed in paragraph 2, and the subconclusions developed under tactical aspects. Indicate those facts and subconclusions that significantly affect combat service support activities influencing choices of possible courses of action by either force or by requiring special activities to insure adequate support. Omit any activity that is not significantly influenced.

Paragraph 3b(1) addresses personnel. Personnel management is of particular importance when weather and terrain conditions are severe, when the area of operations has a significant population and potential labor forces, and when political and economic conditions are unsettled.

Paragraph 3b(2) covers logistics.Logistics is of particular importance when weather and terrain conditions are severe, when the area of operations imposes additional logistic requirements and has significant resources of military value, and when political and economic conditions are unsettled. Coverage is particularly detailed for those commands accomplishing their mission by logistic support of other units.

Paragraph 3b(3) discusses civil-military operations. Civil-military operations are of particular importance in cold war, limited war, occupation operations, and when extensive civil affairs responsibilities have been assigned to the command. It is particularly important to tactical units when the numbers of civilians in the area present control problems and restrict use of fire power. Coverage is detailed for those commands with extensive civil affairs responsibilities.

Paragraph 4 contains the conclusions developed in the previous paragraphs. The conclusions are stated in terms of effects on the general courses of action available to both forces.

Paragraph 4a(1)(a) lists in turn, each significant possible enemy course of action, such as attack; defense; withdrawal; use of air, armor, nuclear fires, chemical agents, guerrillas, etc. Each listed course of action (using separate subparagraphs) is accompanied by a discussion, to indicate the characteristics of the area favoring the courses of action. For attack courses of action, indicate the best avenue of approach. For defense courses of action, indicate the best defense areas and, if appropriate, the best avenue of approach leading to the defense areas.

(CLASSIFICATION)

(3) Effect on enemy air.

(a) Weather and terrain favor enemy employment of air in the division area of operation.

(b) Terrain favors enemy delivery of nuclear weapons by low-level air attack

(4) Effect on enemy use of nuclear weapons. Weather conditions are favorable for enemy use of nuclear weapons. Effective winds do not favor use of fallout. Rolling terrain, numerous folds in the ground, and foliage will reduce thermal effects. Obstacles will be created by forest and tree blowdown.

(5) Effect on enemy chemical operations. Weather does not favor enemy use of chemicals. Terrain favors use of persistent chemicals in the valley forward of his present defensive positions.

b. Effect on Own Courses of Action.

(1) The best natuaral avenue of approach into the enemy area is axis Hill 280 (0010)-Hill 282 (0803)-Hill 326 (1199)-Hill 322 (1394)-ridge west thereof (Avenue D). It is blocked by extensive minefields.

(2) The second best avenue of approach is axis Hill 361 (9709)-Hill 351 (9807)-Hill 359 (0004) -Hill 271 (0702)-hill 326 (1199)-Hill 322 (1394)-ridge west thereof (Avenue A).

(3) Weather and terrain do not favor our attack. We will not be able to maneuver toward enemy positions without being observed except during the hours of darkness. The lack of precipitation will favor cross-country mobility except below 200 meters elevation. Forest fires and tree blowdown caused by use of nuclear weapons in NATIONAL Forest will restrict mobility, observation, and fields of fire.

(4) Effect on nuclear weapons. Weather conditions are favorable for the employment of nuclear weapons. The rolling nature of the terrain, numerous folds in the ground, and foliage will reduce thermal effects on nuclear bursts. The wooded areas are dry and subject to extensive burning. Soil composition does not favor the production of high intensities of radioactivity. Winds generally favor employment by our forces of radiation effects of fallout from nuclear weapons.

(5) Effect of chemical agents. Weather conditions are favorable for our use of chemicals.

Acknowledge.

MANN
MG

OFFICAL:

/s/ Foster
FOSTER
G2

Annex: A-Climatic Summary (omitted)
B-Relief Overlay (omitted)
C-Drainage Overlay (omitted)
D-Slope Overlay (omitted)
E-Vegetation Overlay (omitted)
F-Vegetation Impeding Movement Overlay (omitted)
G-Soils Overlay (omitted)
H-Built-up Areas and LOC Overlay (omitted)
I-Horizontal Visibility Overlay (omitted)
J-Fog Overlay (omitted)
K-Canopy Closure Overlay (omitted)
L-Combined Obstacles Overlay (omitted)
M-Weather Effects on Cross Country Movement Overlay (omitted)
N-Avenues of Approach Overlay (omitted)

Distribution: A

(CLASSIFICATION)

EXPLANATION

Paragraph 4b lists, in turn, broad courses of action that will accomplish or facilitate the accomplishment of the mission, such as attack; defense; withdrawal; or use of air, armor, nuclear fires, chemical agents, and guerrillas. Each listed course of action is discussed in the same manner as enemy courses of action.

Acknowledgement instructions included if distributed outside the headquarters. Normally, the word "acknowledge" is sufficient.

The signature block contains the name and rank of the commander and appears on all copies of the analysis if distributed outside the headquarters. If not distributed outside the headquarters, it is signed by the intelligence officer.

Authentication is required only if the analysis has not been signed by the commander and is to be distributed outside the headquarters.

Annexes are listed by letter and title.

Distribution may refer to a standard distribution list.

APPENDIX C

Briefing Techniques

The nature and roles of the military ser-
ces require exacting communication
ills. Faced with the need for extreme
curacy, absolute thoroughness, and
tention to detail on one hand and brevity,
eed, and almost instantaneous response
the other; a highly specialized and styl-
ed type of speech has evolved. This type of
eech has been called the military briefing.
requires specific techniques with respect
the role of the briefer, to the purpose it
rves, and to the nature of the required
sponse.

Like the intelligence estimate and the
PORD, the military briefing is an opera-
nal tool of the trade and the G2 and S2
e the military briefing to communicate
ith the commander. The military briefing
used so extensively that it has become an
cepted staff procedure technique. The
imary reasons for frequent use of military
iefings are to save time for the senior
ficer, enable him to question the briefer
d to clarify points, and to facilitate rapid,
ordinated responses thereby reducing
action time.

The principles and techniques of effective
eaking apply to briefings just as to any
her type of oral presentation. The more
ncise the briefing is, the better. It is
ually limited to bare, unglossed facts and
the minimum amount of information
eded for comprehension. Intelligence ana-
sts and officers are often required to brief
a very broad subject in a very limited
me. The intelligence briefing usually is a
ne-time only presentation of unfamiliar
cts, with reference to enough familiar
aterial to establish the scope and content
r the listeners—but it is always tailored to
e user. There are no attention-getters.
nly the essentials are delivered in an
jective manner. This is the significant
fference between the military briefing and
eryday public speaking techniques.

The intelligence briefing is a specialized use of military briefing techniques. The purpose is to present selected intelligence information. The briefings are designed to accomplish a specific purpose: to impart information, obtain a decision, exchange information, or to review important details. The objective common to every intelligence briefing is to facilitate rapid, coordinated responses.

There are four recognizable types of intelligence briefings: the information, decision, staff, and mission briefings. Although there are elements common to all, each type is distinct and is discussed separately.

INFORMATION BRIEFING

The information briefing is to inform the listener—to keep him abreast of the current situation or to supply specific requested information. It does not require a decision. The desired response is comprehension. Information briefings provide—

- ☐ High priority information or intelligence that requires the immediate attention of the commander.
- ☐ Complex information or intelligence such as statistical charts that require detailed explanations.
- ☐ Controversial information that requires elaboration for thorough comprehension.

The information briefing deals only with facts. It usually does not include conclusions or recommendations. It should contain a brief introduction to indicate the area to which the briefing is addressed and to orient the listener. As with all briefings, presentation of the facts must be orderly, strictly objective, honest, clear, and concise. You should avoid presenting redundant information. Information must be tailored to the user.

Mastery of the techniques for information briefing is most important. Mental discipline is required in order to present the essential facts objectively, without drawing conclusions. Information briefing elements form an essential part of each of the other three types of briefing techniques. An example of an information briefing format follows.

1. INTRODUCTION.

a. ***Greeting.*** Use military courtesy, address the person(s) being briefed, and identify yourself.

b. ***Classification.*** Announce the classification of your briefing.

c. ***Purpose.*** Explain the purpose and scope.

d. ***Procedure.*** Explain any special procedures such as demonstrations, displays, or tours.

2. BODY.

a. Arrange main ideas in logical sequence.

b. Use visual aids correctly.

c. Plan for effective transitions.

d. Be prepared to answer questions at any time.

3. CLOSE.

a. Ask for questions.

b. Concluding statement.

c. Announce the next briefer, if any.

DECISION BRIEFING

Although the decision briefing contains elements of the information briefing, it is much broader and more comprehensive in scope; and it is presented for an entirely different purpose. The specific response to the decision briefing is an answer to a question or a decision to take a course of action.

The first step in preparing for a decision briefing is to isolate and define the problem. Never present a problem-solving situation too complex for solution by any step-by-step logical reasoning process. The assumptions may be stated or not. Examples of proper assumptions might be: "Adequate resources will be provided," or "The enemy will continue to defend." Assumptions must be both reasonable and supported.

The next step is to present the facts bearing on the problem. This part of the decision briefing is essentially the same as the information briefing, and the same rules generally apply except that if already known facts have a direct bearing on the problem, they should be repeated. Since this briefing is presented to elicit a decision, the users may need to be reminded of pertinent facts directly related to the problem so they can arrive at a sound decison. Facts previously unknown to the users should be limited to those that have a direct bearing on the problem and that might influence the outcome of the decision to be made or the subsequent action to be taken.

In presenting facts, you should strive for objectivity. All important facts must be brought out accurately and fully. Facts may be substantiated by citing single authoritative sources, multiple supporting opinions or personal experiences, or by demonstrating their reasonableness. You should be familiar with the sources of your information. Wrong conclusions or recommendations can be more readily excused if they are a matter of incorrect judgment than if they are improper or biased presentation of the facts. The facts must have a bearing on the problem.

Next, state the probable courses of action, and briefly point out the advantages and disadvantages of each. Prior to the presentation, you should analyze possible reactions to each of the courses of action and state concisely the potential dangers involved. This discussion is followed by the conclusions, which consist essentially of succinct statements of the acceptability or undesirability of each course of action and reasons why each should be so considered.

Both the discussion and conclusion portions of the briefing must be logically constructed. A logical presentation allows the commander to make correct conclusions from the facts presented. Throughout a presentation, present evidence and draw inferences from it. You must be certain that

onclusions flow reasonably from the facts resented. Each recommendation should be tated so that its words can be used to state ıe decision whenever appropriate.

In your conclusions, list the possible ourses of action in order of merit. If possible, prior to the actual briefing, solicit concurrences and nonconcurrences from interested staff sections. When presenting ecommendations, you should be prepared identify nonconcurrences and state from hom and for what reason they were made.

You must be prepared for interruptions nd questions at any point during the briefıg. When interruptions occur, questions hould be answered completely before proeeding. At the same time, you should not e distracted from rapidly resuming the lanned sequence of presentation. You must e able to support, by explanation, any part f the briefing.

A decision is the expected response of the ecision briefing. At the outset of the briefıg, you must announce clearly that you are eeking a decision. At the conclusion, if no ecision is received, you must ask for it. You ıust be certain the decision rendered by the ecision maker is understood. If you are ncertain, you should ask for clarification.

It is not always necessary to use the comlete form of the decision briefing. For xample, a G2 or S2 might present the ommander with one new facet of a current roblem. He might explain the new aspect nd its effect on current operations plans, ecommend a course of action, and ask for a ecision. At other headquarters, depending argely on the personality and desires of the ommander, only portions of the briefing ıight be presented. However, the processes sed to formulate the decision briefing emain essentially the same, regardless of he local peculiarities of presentation.

An example of the decision briefing ollows.

. INTRODUCTION.

a. ***Greeting.*** Use military courtesy, ddress the person(s) being briefed, and lentify yourself.

b. ***Classification.*** Announce the classification of your briefing.

c. ***Purpose.*** State the purpose of the briefing is to obtain a decision and announce the problem statement.

d. ***Procedure.*** Explain any special procedures such as additional briefers.

e. ***Coordination.*** Indicate what coordination has been accomplished.

2. BODY.

a. ***Assumptions.*** Assumptions must be valid, relevant, and necessary. Omit if there are none.

b. ***Facts Bearing on the Problem.*** Must be supportable, relevant, and necessary.

c. ***Discussion.*** Analyze courses of action. Plan for smooth transition.

d. ***Conclusions.*** Give the degree of acceptance or the order of merit for each course of action.

e. ***Recommendations.*** State action(s) recommended. Be specific, not a solicitation of opinion.

3. CLOSE.

a. ***Ask for Questions.***

b. ***Request a Decision.***

4. FOLLOW UP. Following the briefing, if the chief of staff or executive officer (XO) is not present, inform him or the staff secretary of the commander's decision.

STAFF BRIEFING

The staff briefing is the most widely used type of military briefing. It is designed for the rapid oral dissemination of information to a group of people and is similar to the information briefing. Although it is not commonly used for planning purposes or for solving problems, it bears a similarity to the decision briefing whenever it leads to a command decision. It is used at every military echelon to keep the commander and his staff informed of the current situation. The anticipated response is a coordinated or unified effort.

In headquarters of larger units, staff briefings are normally scheduled periodically. Unscheduled staff briefings are called as the need arises. In combat, briefings are held as often as the situation requires. Such briefings are especially valuable in operational conditions when a general awareness of the situation is difficult, if not impossible, to achieve by any other means. Therefore, the staff briefing is an effective tool employed by the commander to ensure unity of command.

In the staff briefing, each staff representative may be called on to present information pertinent to his particular activity. The staff briefing is usually presided over by the immediate superior of the general staff or coordinating staff officers. He usually calls on staff representatives to present matters that might pertain to or require coordinated action by other staff sections. Each headquarters usually has an established order of staff presentation. The staff presentations might be preceded or followed by remarks from the chief of staff, XO, or the commander, if he is in attendance.

Staff briefings are commander's tool for developing coordinated, unified staff action. The commander's personality and the needs of movement will lead him to use his staff as he sees fit in the exercise of command.

The nature of the information presented at the staff briefing varies at each level of command. At lower levels, the information will pertain only to the immediate unit and its activities. At higher levels, the information will be of a more general nature and will deal with policies instead of particular actions. In field operations, information will emphasize tactical matters and will tend to take on fewer characteristics of the information briefing and more of the decision briefing.

The staff briefing is a valuable and flexible instrument available to the commander or chief of staff at every level of command. It is used to achieve a unified, coordinated effort in accomplishing the mission of the command.

MISSION BRIEFING

The mission briefing is designed especially for use during combat operations. It is used to impart information, give specific instructions, or to instill an appreciation of the mission. The desired response is a thorough understanding and appreciation of operational conditions that will lead to the successful execution of the mission. It is closely related to the information briefing.

The intelligence portion of the mission briefing is usually conducted by the G2 or S2, depending on the nature of the mission to be performed or the level of the headquarters involved.

The first step in accomplishing a mission—informing those involved of their tasks—is taken by issuing oral or written orders. When a situation is unique or the mission is of a critical nature, particularly as it relates to the actions of individual participants, the mission briefing will provide individual or small units with very specific mission data by means of the mission briefing. The mission briefing reinforces previously issued orders. It also provides a more detailed list of requirements and particular instructions for individuals, often explaining the overall significance of their roles. This type of briefing must be prepared and presented with great care to ensure that it neither confuses mission or objectives, nor conflicts with previously issued orders.

A good example of the use of the mission briefing in larger operations comes from World War II, prior to the invasion of Normandy. The 101st Airborne Division had received its mission: Conduct an airborne assault into Normandy on the night of 5-6 June 1944. Because each smaller unit and even each individual had a vital role to play, mission briefings were used to inform each man of his critical role in the operation. First, the men were told of the general situation and mission of the division. Then each individual was informed of the specific mission of his unit and was given detailed instructions for accomplishing it. Using photographs and terrain mock-ups, the briefers made certain that each man was intimately familiar with his job and his

particular AO. Each man learned to recognize distinguishing landmarks, how to orient himself no matter how far he missed his drop zone, where he was to go once on the ground, and the situations he might expect to find and how to deal with them. Finally, he was told of the significance of his role, and how it would contribute to the successful accomplishment of the division mission and, even more, to the success of the allied invasion.

The purpose of the mission briefing can be summarized as the final review of a forthcoming military action that is designed to ensure that those taking part are certain of their objectives and the particular problems that may confront them.

BRIEFING POINTERS

Effective briefing cannot be learned by simply reading a book. Skill in presenting briefings requires knowledge of the principles of speech and experience gained by considerable practice. Even the most accomplished briefer will learn something new and pick up pointers every time he briefs.

First, know your user. Just who is being briefed? What is his official position? What are his personal likes and dislikes concerning briefings? What does the user expect of the briefer?

Each audience to be briefed is different. Each has its own particular needs (personal likes and dislikes). Attempt to determine these needs and, on that basis, be guided by them in constructing the briefing. This procedure will lead to more effective planning and a more successful presentation.

Second, analyze the situation to determine the purpose of the briefing. Is it to present merely the facts, or is a recommendation required? The purpose of the briefing is extremely important, for it will form the basis of the presentation.

Third, survey the facilities. Where will the briefing be presented? What kind of aids might be used? If it is to be held in an office, it may be impossible to use heavy equipment. If it is to be held in the field, there may be no electricity and no means of preparing transparencies. Will charts or graphs be placed on chalkboards? Are they available? Are draftsmen available with material to produce the necessary aids? Is time available to prepare aids? These and countless other questions must be answered in the survey step. When planning for and preparing to use aids, prepare a detailed presentation plan. Ensure that any assistants, if used, are familiar with what is expected of them. Consider the physical facilities available.

Fourth, schedule preparation to ensure that necessary actions are accomplished. Every intelligence officer should formulate a briefing checklist (see sample, page C-6). This checklist provides an outline of the tasks to be accomplished. Fill in the outline as the briefing takes shape; as the tasks are accomplished, check off the items. Finally, make an initial estimate of the deadlines needed to accomplish each task. Schedule facilities for practice and request critiques. Thorough preparation is essential to a successful briefing.

After analyzing the situation, the next task is to construct the briefing. The analysis helps to determine which type of briefing to make. An information briefing will, among other things, consist of assembling all available information and intelligence, selecting key points, deciding how best to present these key points, and deciding what visual aids should be used. If it is to be a decision briefing, the problem must be stated, courses of action isolated and analyzed, conclusions reached, recommendations made, and an understandable decision received.

Constructing military briefings is a five-step process:

- ☐ First, know the subject thoroughly. Attempt to acquire as much knowledge of the subject as time and circumstances permit. A logical and thorough briefing is the result.
- ☐ Second, isolate essential points to be presented. Be certain to present all essential facts. Even if a fact should prove detrimental to prepared conclusions, if it is a vital consideration, discuss it. If the users want to know more,

they will ask questions giving you an opportunity to provide additional background material.

- Third, arrange facts in a normal and logical order for presentation. The order of arrangement will depend on the type of briefing, the subject, and the visual aids available.

- Fourth, select only those visual aids that will illustrate the point. Aids should be simple, effective, and clear. Good titles or captions help. If the aids consist of charts, be certain the lettering is large enough to read. Ensure there are enough handouts for everyone in the room and have an assistant distribute them. Try to determine ahead of time if the users prefer to read the charts for themselves or have you read them. If the users read the charts, allow plenty of time for reading and comprehension. Watch the users; many commanders will signal when they are ready to continue. Even if the audience reads the charts, it may be helpful if you emphasize the especially significant points. Good visual aids, well handled, add to clarity; bad or poorly used aids are worse than none. If the aids are cumbersome or complicated, plan to have someone assist you.

- Fifth, establish key words. Good briefers ensure that the words are understood. Use familiar terms, when possible; define the unfamiliar; and give warning when familiar words will be used in uncommon ways. Rehearse if possible. Adequate practice, within whatever time limits there may be, will pay dividends in familiarity with the subject, smoothness of presentation, impact on the audience, and success of the briefing.

Briefings are characterized by conciseness, objectivity, and accuracy. With certain exceptions, the basic rules for effective speaking also apply to the delivery of a briefing. The success of the briefing is directly affected by the manner in which it is presented. A confident and relaxed, but forceful delivery, clearly enunciated and obviously based on a full knowledge of the subject, helps convince the users that the briefing has merit.

Exhibit confidence, enthusiasm, and sincerity. Maintain a relaxed, but military bearing. Use appropriate gestures, move about naturally, and avoid distracting mannerisms. These fundamental delivery principles, common in effective speaking, apply.

If a decision is required, discuss all feasible courses of action and their advantages and disadvantages. Use logic to arrive at conclusions and recommendations. Reveal the reasons for arriving at the stated conclusion as the most logical course of action. Understand questions before attempting to answer them. If you do not know the answer, say so and offer to provide an answer later. Answer questions directly, briefly, and to the point. Answer the question and only the question, and stop. The intelligence officer is responsible for presenting the material and furnishing the user with comprehensive information.

Strive for a smooth, convincing, friendly, and effective delivery, with a proper military bearing. A pleasant, well-modulated voice suited to the size of the area or room is a requisite. Be confident. Confidence is achieved through practice and a thorough knowledge of the subject.

Following the briefing, prepare a concise memorandum for record. It should record the subject, date, time, and place of the briefing; as well as ranks, names, and job titles of those present. The substance of the briefing may be recorded in very concise form; however, depending on local custom, this summary may be omitted. Recommendations and their approval, disapproval, or approval with modification are recorded, as well as any instructions or directed action resulting from the briefing. If there is any doubt about the intent of the decision maker, a draft of the memorandum for record should be submitted to him for approval or correction before it is prepared in final form and distributed.

The briefing checklist that follows is useful in preparing and ensuring that the presentation is concise and to the point.

1. ANALYSIS OF SITUATION.
   a. ***Audience.***
      (1) Who and how many
      (2) Official position
      (3) Knowledge of the subject
      (4) Personal preferences
   b. ***Purpose and type.***
   c. ***Subject.***
   d. ***Physical facilities.***
      (1) Location
      (2) Arrangements
      (3) Visual aids

2. SCHEDULE PREPARATIONS.
   a. ***Determine requirements.***
   b. ***Schedule rehearsals.***
   c. ***Arrange for final review.***

3. CONSTRUCT THE BRIEFING.
   a. ***Collect material.***
   b. ***Prepare first draft.***
   c. ***Revise and edit.***
   d. ***Practice*** (Rehearse).
      (1) Isolate key points
      (2) Memorize outline
      (3) Develop transitions
      (4) Use of definitive words.

4. DELIVERY
   a. ***Posture.***
      (1) Military bearing
      (2) Eye contact
      (3) Gestures and mannerisms
   b. ***Voice.***
      (1) Pitch and volume
      (2) Rate and variety
      (3) Enunciation
   c. ***Attitude.***
      (1) Businesslike
      (2) Confident
      (3) Helpful

5. FOLLOW UP.
   a. ***Ensure understanding.***
   b. ***Record decision.***
   c. ***Inform proper authorities.***

APPENDIX D

Special Operations and Environments

The geographic range of US interests in the world today requires that the division be prepared to fight and win in all types of terrain and climate.

The division may be committed to battle in areas where severe weather, climate, and terrain impact on military operations and the intelligence mission. In addition to the physical effects on the individual soldier, weapons, and equipment, environmental extremes degrade the effectiveness of IEW. Regardless of environmental conditions, the commander relies on effective IEW support. In fact, extreme environments often create a greater need for IEW support.

Special operations are those in which the natural and man-made characteristics of the area, the nature of the operations, or unique conditions under which operations are conducted may require specially trained personnel or special techniques, tactics, or equipment. Special environments include—

- ☐ Mountains.
- ☐ Deserts.
- ☐ Jungles
- ☐ Winter.
- ☐ Urbanized terrain.
- ☐ Night operations.
- ☐ IEW operations in an NBC environment.

The paragraphs below describe IEW operations in special environments. The special considerations, techniques, and procedures that will increase the effectiveness of IEW operations in harsh environments are detailed in these discussions. Special training and acclimatization periods are required for personnel to be effective in certain parts of the world. Special maintenance and operational procedures are often required to ensure IEW systems function properly. Combat operations under these conditions require special IEW support.

The effects of extreme climatic and terrain factors generally cause military operations to proceed at a slower rate than in more favorable environments. Setup and teardown times may be longer and rates of march slower. Routine functions, such as communications, can become a major undertaking. Commanders and staff officers must ensure that planning for combat operations takes into consideration the environmental influence of friendly and enemy operations.

While the means to collect data in special environments are identical to those employed in normal environments, the methods of employment and equipment used may differ.

The enemy's methods of employment and deployment will also differ, but only to the extent permitted by their doctrine or dictated by the environment.

INTELLIGENCE AND ELECTRONIC WARFARE OPERATIONS IN THE MOUNTAINS

Operations conducted in mountainous areas are characterized by heavy use of indirect fires, canalized movements along valley floors, decentralized combat operations, increased collection operations from aerial resources, and reduced C^2 capabilities. Operations conducted by MI units in mountainous terrain may often result in the unit's restricted operational and sustainment capabilities.

Mountainous terrain degrades the target acquisition and early warning capabilities of GSRs and the collection capabilities of EW systems.

Because of the low density of manpack IEW equipment in the heavy division, there may be brigade areas unsupported or severely reduced in GSR and EW support. Such restrictions are minimized in light division deployments to mountainous areas because of the heavy reliance on manpacked systems in the MI battalion of the light division. Although operations may be hampered, the mission for all MI assets remains the same as in any other type operation. The optimum operation of these IEW systems in mountain terrain is affected by interrupted LOS, extreme temperature variations, and heavy precipitation.

In mountain operations, the terrain isolates friendly units, requiring them to operate more independently than in other environments. The division staff and MI battalion TOC may experience temporary interruptions in communications with subordinate units, forcing them to operate more independently and to rely on their own resources to develop the intelligence they need.

Weather in mountainous terrain is difficult to predict. The weather can change dramatically in short periods of time. As storms develop, the effects of the temperature and the windchill factor may become as important an item of intelligence as the location and activity of major enemy units. Exposed flesh can freeze in a matter of seconds. The higher elevations are frequently shrouded in rain, snow, sleet, and fog. Electronic surveillance, as well as visual observation, is severely limited under these conditions. When weather permits, mountain heights offer outstanding conditions for long-range visual observation and electronic surveillance. Weather data and forecasts are increasingly more important in selecting areas and the desired time to conduct operations.

Cross-country movement and trafficability become more important in determining enemy capabilities and intentions. Potential enemy use of nuclear weapons in mountainous terrain is a prime intelligence consideration. In some mountain terrain, the effects of nuclear detonation can be effectively contained within a specified area.

Wooded mountainous terrain has the same general effect on intelligence operations as does dense jungle. Enemy forces are difficult to detect and generally difficult to collect against. The best sources of information are EPWs, defectors, and friendly reconnaissance patrols.

Mountainous terrain favors light infantry forces. They will likely be deployed to control passes, road junctions, built-up areas, and the high ground adjacent to these areas. Enemy tactics include bypassing defensive positions and attacking from the flanks and rear. Enemy forces will decentralize the employment of artillery and use multiple rocket launchers as individual fire units.

Rugged, irregular mountainous terrain degrades AM and FM communications and associated C^2. Heavy reliance on retransmission and relay systems is required. Heavy (TACJAM) and medium (TRAFFIC JAM) ECM systems can be used for retransmission tasks when all the other means fail.

HUMINT provides the commander his best source of combat information and intelligence in this type of environment. Mountain heights offer exceptional observation post sites which are supplemented with foot patrols. Population centers in valley areas serve as lucrative HUMINT collection and interrogation sources.

OPSEC, as in all operations, will be of prime importance for attacking forces. Defending forces will have a distinct advantage to deceive and contain any attack.

EW operations suffer a definite disadvantage in mountainous terrain. Enemy communications sites use terrain masking and relay systems to thwart both DF and ECM activities. ECM and ESM systems are best employed above the valleys, concentrating on the valley floors for any enemy approaches. Ground-based signals intercept and DF systems may frequently be employed in DS of the brigades because of the dispersion of friendly forces. LOB data may

be degraded due to the terrain. Ground-based systems will normally be used in conjunction with QUICKFIX.

Mountain operations increase equipment maintenance requirements. Equipment used in mountainous environments must be rugged and man-portable. Weather in the higher elevations or during seasonal variations will affect equipment the same as in winter operations.

Reduced mobility, compartmented terrain, limited visibility, and rapidly changing weather increases the importance of reconnaissance and surveillance operations in the mountains. It is easy for the enemy to conceal his forces.

Many maps of mountainous areas are inaccurate or lack detail making terrain analysis important. Limited mobility and LOS increase requirements for aerial reconnaissance. Procedures should be established to debrief frontline soldiers, aircrews, and vehicle operators to acquire terrain information.

The mountainous environment, with severe and rapidly changing weather, limits the use and performance of aerial sensors and requires special flying techniques. Mountainous terrain complicates flight route selection. Flight routes or orbits above the ridge lines expose aircraft to unacceptable risks of detection and destruction by the enemy. Flight routes follow terrain corridors and aircraft must pop-up for limited periods to intercept or jam the target emitter or receiver. LOS is very restricted.

Mountain weather is especially hazardous to flying, particularly helicopters. The effects of fog, high altitude, wind, and ice require special consideration. See FM 90-6 for a detailed discussion of mountain operations.

INTELLIGENCE AND ELECTRONIC WARFARE OPERATIONS IN THE DESERT

Deserts are semiarid and arid regions containing a wide variety of soils in varying relief. There are three types of desert: mountain, rocky plateau, and sandy or dune. Operation of EW equipment in the desert is affected by dust and sand, extreme temperature variations, static electricity, and wind.

Desert operations require highly mobile forces. The size of the areas of operations and interest are normally increased at all echelons. Collection assets are focused on targets at significantly greater distances than normal. The division may become more dependent upon corps and USAF tactical reconnaissance missions for intelligence because collection requirements may exceed the range of the division's collection capability. Extended operational areas and wide separation of combat units require more DS and GS reinforcing missions for MI resources. The mobility factor of the desert requires more tracked than wheeled vehicles for EW systems.

IPB is vital to a desert operation. Avenues of approach and mobility corridors provide for rapid movement and ample maneuever space. At the same time, visibility may be seemingly unlimited. Dust from vehicles and low-flying aircraft can be visually observed at great distances. Yet, in most deserts there are avenues of approach with some cover and concealment. IPB helps commanders use terrain to maximize mobility, cover and concealment, and effective communications. It helps them predict how the enemy will use the desert.

Desert combat is rapid. An attack may be carried out by the enemy from the line of march. Tank formations will generally be used in the first echelon and the attack may be conducted using a single echelon. The enemy may employ airborne and heliborne forces to seize objectives in the rear.

Frequent and extreme changes in desert weather have a significant influence on intelligence collection capabilities. Long periods of unobstructed visibility are abruptly interrupted by violent wind and sandstorms. These storms reduce visibility and drive sand into mechanical and electronic equipment causing frequent breakdowns. This wear and tear, particularly on mechanical equipment, requires frequent replacement of moving parts. Wide variations in day and night temperatures also have detrimental effects on both people and

machines. Precautions must be taken to prevent casualties resulting from direct exposure to the sun and to high temperatures.

High desert temperatures may cause equipment to overheat. Heat causes batteries to lose power more quickly. High temperatures cause overheating in communications equipment resulting in equipment failure. Lenses on night observation devices can become discolored when directly exposed to the sun. Communications equipment must be protected from heat and from the direct ray of the sun. Degradation of radio communications may occur due to extreme heat, while communications during hours of darkness can be excellent. During daylight, a 20 to 30 percent loss of radio communications is experienced due to heat. Frequency correcting will also limit radio capabilities. EW systems and RATT equipment will suffer frequent downtime from sand and dust if not protected. Vehicle maintenance requirements increase in extreme heat. The heat dries out seals and gaskets and causes tires to crack. The effects of sand on equipment creates the need to constantly replace bearings and other moving parts. Since reconnaissance in desert operations is generally accomplished using mobile patrols, maintenance requirements will directly impact on reconnaissance capabilities. Aerial photography and visual observation are subject to heat-wave distortion and dust storms. HUMINT operations are reduced due to smaller population areas.

OPSEC requirements increase significantly due to the long range of enemy observation and IMINT and SIGINT systems. Like OPSEC, the value of EW increases. The expansiveness of the desert precludes using terrain masking to avoid jamming. ECM can freeze the battle for destruction by fire and maneuver and plays a significant role in air defense and CAS suppression.

The QUICKFIX system and scout and air observer aircraft can be used effectively in the desert within special limits and requirements. Concealment of the aircraft is difficult. Helicopter rotors cause dust which can be seen for miles. This can be partially overcome by selecting hard-landing sites, minimizing low-altitude hovering, and treating landing zones with oil or chemicals. Nap-of-the-earth flying is essential to aircraft survival. Aircraft cannot loiter in the open for long; thus, they normally work in pairs. The desert heat reduces the lift capability of aircraft. This can be partially overcome by reducing payloads and making running takeoffs. Desert operations create additional maintenance requirements and increase the aircraft deadline rate.

Desert observations are affected by—

- ☐ Long ranges and the refraction of visible light which impairs visual perception.
- ☐ Heat waves which blur detail.
- ☐ Estimating distances due to the lack or absence of terrain reference points.
- ☐ Mirages which can distort objects to the point of being unrecognizable.

The intensity of these effects often depends on the angle of the sun in relationship to the observer. Observation in the desert is enhanced by placing observers as high above the desert floor as possible. In rolling desert terrain, tanks and other vehicles are spread over an extended area permitting observation into areas which cannot be seen by adjacent vehicle crews.

GSR and REMS are used to overcome visual distortion caused by the magnification of heat waves. In a desert environment, GSRs can be used to acquire targets at extended ranges and cover considerable distances across the front. The wide separation of combat units increases the value of GSR surveillance of flanks and gaps between units.

The optimum operation of radar in desert terrain is degraded by—

- ☐ Dust and sand.
- ☐ Temperature variations.
- ☐ Static electricity.
- ☐ Wind.

To obtain the best performance in target detection, locate the radar set as high as possible above the area under surveillance

so that the radar antenna overlooks the area. On smooth sandy surfaces, the detection range for moving targets may be reduced because sand presents a surface that does not reflect an appreciable amount of clutter. Increasing the operating angle helps to reduce this deficiency. A disadvantage caused by the terrain is that little natural cover and concealment are available for radar positions.

OPSEC and deception are vital to desert operations. Combat forces are extremely difficult to conceal in the flat, open terrain. Aerial collection platforms are very effective in locating concentrated enemy forces.

Mounted patrols are effective in desert operations. Air reconnaissance is used to the maximum extent possible. Ground reconnaissance by maneuver forces will be critical in confirming intelligence. The division's cavalry squadron is ideally suited for ground and aerial reconnaissance missions. Observation posts in static situations are sited in pairs as far apart as possible to permit accurate intersection.

The desert terrain favors wide envelopments and turning movements. Collection operations must cover all directions and use all available collection systems, especially those with long-range capabilities. Since large unit consolidations and preparations for attack are virtually impossible to hide, commanders on both sides may decide to conceal the time and place of attack through the use of deception operations. The G2 provides intelligence support for deception planning. He incorporates all of the collection means available in his collection plan to achieve as much redundancy as possible. All efforts are made to confirm or deny significant indications of enemy intentions. See FM 90-3 for a detailed discussion of desert operations.

INTELLIGENCE AND ELECTRONIC WARFARE OPERATIONS IN THE JUNGLE

The jungle regions of Asia, Africa, and Central and South America are potential areas of conflict where US forces could be involved. Jungles vary from tropical rain forests and secondary growth to swamps and tropical savannas. Heavy rainfall, high and constant temperature, high humidity, and thick vegetation are the dominant features of jungle areas. These factors—climate and vegetation—contribute to restrict operational sustainment capabilities of MI units.

Because of the density of jungle vegetation, IEW operations are decentralized. Ground mobility restrictions of the jungle require all IEW systems to be light, manportable, rugged, and fielded in greater densities than in more open environments.

The jungle climate and dense vegetation reduce radio LOS and significantly reduce the effectiveness of AM and FM communications. About 10 to 25 percent of electromagnetic radiation is absorbed, decreasing communication ranges by about 20 percent. To facilitate effective command and control, hilltop and aerial relays are used. Although wire appears a logical method, security and maintenance considerations may preclude its use.

Jungle vegetation limits the identification of sounds, smells, deployments, movements, locations, and other activities which might otherwise be detected. Intense tropical storms can temporarily preclude the use of electronic collection equipment. Thick jungle terrain restricts mobility largely to roads and foot paths. The best HUMINT sources are EPWs, defectors, patrols, and the local populace. The local populace can provide a wealth of information about enemy forces operating in the local area. In insurgency situations, efforts are made to identify individuals in the area that support the enemy by providing supplies, food, and information about friendly forces in the area.

GSRs, in heavy jungle foliage, will be of limited value. Foliage distorts signal reflections from vehicles and troops passing through or behind dense foliage. Although GSR operations in jungle environments normally are limited, they are still valuable when used in a security role with other surveillance means, such as night observation devices and patrols.

Lightly equipped, long-range reconnaissance patrols play a major role in intelligence collection operations in the jungle environment. The terrain provides excellent cover and concealment, improving the chances of patrols to accomplish their mission unobserved and undetected. In patrol planning, consideration is given to the possibility that an aerial resupply, often required in jungle operations, will provide the enemy with indications of patrol activity and possibly the location of the patrol. Communications range is limited, often requiring radio relay for reporting intelligence and targeting data.

Heavy foliage and rain showers decrease the range of enemy electronic signatures, reducing the effectiveness of signals intercept. Ground-based intercept systems are concentrated in the brigade area where the enemy main effort is expected to occur. They may be used more as individual collection stations than as integrated systems. The lightweight, highly-mobile systems such as the AN/PRD-10 will find extensive use. They may accompany and support patrols.

Corps SLAR operations provide the commander with information about enemy movement. The airborne QUICKFIX has excellent radio LOS to all targets for DF intercept and COMJAM operations.

High incidents of rust, corrosion, and fungus caused by jungle moisture and humidity increase the necessity for daily maintenance on equipment especially at the operator level. This is especially true for electronic systems, which are subject to very high failure rates in jungle environments. Continuous operation of such systems generates heat which combines with moisture, corrosion, rust, and fungus to cause more frequent equipment failures.

Mountainous regions may also be found in jungle areas. These areas are particularly difficult for patrols to traverse, especially during the rainy season. In these regions, the extremes of weather can run from very hot and humid at the lower elevation to cold and wet at the highest elevations.

INTELLIGENCE AND ELECTRONIC WARFARE OPERATIONS IN WINTER

Because over 50 percent of the world can become a winter battlefield, the Army must be prepared to conduct IEW operations in a winter environment. This environment is characterized by low temperatures, fog, freezing rain, snow, ice, frozen ground, and shorter periods of daylight. Spring and fall include changing weather conditions and a series of freeze-thaw cycles. The effects of the winter environment on personnel and equipment are numerous. Because of the effort and extra equipment necessary to keep warm, routine tasks take longer and are more difficult to perform. Mobility over frozen ground can be better than over unfrozen ground; snow or spring mud on the other hand, can hinder or halt movement on roads or cross country. Fog and blowing snow can reduce visibility to near zero. Performance of most electrical and optical systems is degraded.

Assessing the enemy's capability to live and fight in extreme cold is an essential intelligence requirement. Historically, Warsaw Pact forces conduct numerous exercises during the winter giving them experience in conducting combat operations in cold climates.

Snow and cold weather have detrimental effects on the operations of both mechanical and electronic equipment. The following factors can cause degradation of IEW operations:

- ☐ Reduced mobility of vehicular-mounted systems.
- ☐ Poor or inaccurate performance of radars, sensors, radios, and other electrical and optical systems.
- ☐ Antenna icing can reduce range, increase interference, alter frequency or simply collapse antennas.
- ☐ Thickened oil and lubricants can cause mechanical problems in generators and vehicles.
- ☐ Battery life decreases.

Certain environmental phenomena such as snow and fog can significantly degrade visibility making the GSR a valuable asset. However, cold weather adversely affects the performance of the GSR and must be considered by the operators. The successful operation of the radar on the winter battlefield is affected by—

- ☐ Signal scattering by airborne snow, ice, and fog.
- ☐ Variation of radar images caused by snow cover and frozen ground.
- ☐ Reduced ability of equipment operators to function in the cold.
- ☐ Reduced battery life.
- ☐ Cold and condensation-induced maintenance problems.

OPSEC is a prime consideration during winter operations. Due to the lack of live foliage in many areas, concealment and camouflage of positions, equipment, and facilities are very difficult. Vehicle and foot traffic leave an unmistakable signature in the snow. However, new snowfall can hide the noise and tracks.

Winter battlefield operations require longer to perform—even the simple tasks. Experience indicates that more time is needed for maintenance on IEW equipment.

A major impact of winter operations on equipment is caused by cold and snow. Extremely low temperatures cause metal parts of weapons to become brittle resulting in a high breakage factor for internal parts. Vehicle engines and generators require frequent starting, and the frequent starts cause condensation in the internal parts of the engine which later freezes. The intake filters of carburetors and systems are particularly susceptible to icing. Condensation on microphones and telephone handsets ice frequently if not protected. Blowing snow will also jam air intake valves. Pneumatic antenna masts and automatic data processing equipment freeze because of condensation and freezing temperatures. Power supplies have greatly reduced life spans. RATT equipment is very susceptible to malfunction under these circumstances.

Winter operations require more spare parts and oil changes. Each unit will need larger class III allocations because of frequent engine starts. Higher PLL usage factors will be experienced for filters, batteries, spark plugs, hydraulic hoses, and all types of seals. Less viscous lubrications are required.

In winter operations, the human element is all important and demands concerned leadership and thorough training. Particular attention must be given to minimizing the effects of vision whiteouts with the attendant loss of perception which affects driving and flying. High windchill factors and the potential problems of frostbite and immersion foot are additional considerations.

Only with the proper training, planning, and preparation can IEW operations be successfully conducted on the winter battlefield.

INTELLIGENCE AND ELECTRONIC WARFARE OPERATIONS ON URBANIZED TERRAIN

Urbanization is gradually changing the nature of the battlefield. Urban areas, spreading across LOC and adjacent terrain, are narrowing or eliminating avenues of approach.

Urban centers may be seen as key terrain or as obstacles, depending on the nature of the conflict and the mission and capabilities of the division. Urban centers contain the bulk of the population and the economic, political, and cultural facilities of a country or area. The decision to attack or bypass an urban area may be based on political and social, as well as military, considerations. The scope of this discussion is limited to the tactical considerations for a division operating in a mid- to high-intensity conflict.

Urban sprawl expands the scope of IPB, particularly terrain analysis. It increases the requirements for detailed analysis of where smaller units can move, shoot, and communicate; and how the built-up areas

will affect both friendly and enemy organization, disposition, weapons, employment, and maneuver.

Urbanized terrain normally offers numerous avenues of approach for mounted maneuver forward of and leading to the built-up area. However, in the proximity of and within the built-up area, routes converge and become restrictive. Bypass may be blocked by urban sprawl or adjacent natural terrain.

Within the built-up areas, avenues of approach and maneuver space are determined by street patterns, building arrangements, open areas, and underground systems. Mounted forces are limited to streets, alleys, and open areas. Dismounted forces use available cover by moving through buildings and underground systems, along the edges of streets, and over roofs.

Urban combat is a three-dimensional battle. In addition to fighting at the street level, it is also conducted in the sewers, subways, basements, and in the upper stories and roofs of buildings. While this enhances OPSEC, it makes surveillance and target acquisition much more difficult.

Intelligence collection in urban areas requires intensive management. The collection effort is severely hampered by the availability of ample cover and concealment which suppress enemy unit signatures. An urban environment, particularly one that is extensive, will all but eliminate many of the indicators used to determine enemy activities and disposition. The flash, sound, smoke, and dust signatures of weapons are suppressed or distorted.

Urban areas are characterized by abundant cover and concealment and limited visibility. LOS limitations decrease the surveillance and target acquisition capability of observation posts, GSR, and signals intercept systems. Inaccurate range and azimuth readings may result when signals ricochet off buildings.

GSR will normally be deployed near the edge of urban areas used to monitor routes into and out of the built-up areas. Inside the built-up areas, radars are positioned to detect movement along streets, alleys, and open areas, especially during periods of limited visibility.

HUMINT provides the commander with the best means to gather intelligence. Troops supply first-hand knowledge about the location and type of enemy equipment and activity. Interrogations of EPWs, civilians, line crossers, and defectors will probably be the best source of information on enemy concentrations within the city. Civilians recently displaced from their homes may provide the location of enemy forces and information on structures such as fortifications, major facilities, and vehicle or foot bridges. Before the battle, HUMINT collection activity focuses on collection and analysis of city plans to support IPB of the urban area.

Communications and noncommunications intercept systems have limited effectiveness within built-up areas. There will be considerable crowding on the FM band with emitters located on tall structures to afford radio LOS. Enemy forces will make heavy use of wire and established civilian telephone systems. Manpack intercept and DF systems are well suited to support military operations on urbanized terrain (MOUT) due to their ability to be used in high towers and buildings. Vehicle-mounted ground collection systems are best used to provide early warning and indications of enemy intentions or approaches to the urban areas.

ECM also have little use in MOUT due to limited radio LOS. As with the collection assets, ECM systems are best employed to provide COMJAM support in the outlying areas along suspected avenues of approach. Additionally, ECM systems may be tasked with collection missions to support other ESM assets.

Aerial observation and signals intercept are used to overcome LOS limitations of ground-based systems. However, aerial signals intercept will still be hampered by distorted signals ricocheting off structures within the built-up areas. Aircraft flying over built-up areas can use the higher buildings for limited protection, but are vulnerable to man-portable air defense weapons from within the built-up area.

INTELLIGENCE AND ELECTRONIC WARFARE OPERATIONS AT NIGHT

Both air-land battle and Soviet doctrine specify continuous combat, including combat at night and during other periods of limited visibility. Although night operations are difficult, they can be effective.

Night operations require special training, planning, and other preparation. In some cases, it requires special operating techniques and the use of night observation devices.

IEW requirements do not change significantly at night, except that a greater level of detail is needed in their planning and execution. For example, situation development requirements might include detailed information concerning enemy dispositions and terrain features.

IPB must clearly indicate where division forces and the enemy can move, shoot, and communicate. The nature and location of obstacles become more critical. Some slow-go areas may become no-go at night. Movement is slower at night. Decision points may need to be adjusted to allow more time for friendly forces to act.

Target development requirements, which are based on IPB, do not change significantly at night. However, there is a greater reliance on nonvisual means for acquiring targets. The FSE at each echelon in the division will depend more on IEW and target acquisition sensors, such as GSR, SLAR, moving target and weapon locating radars, and signals intercept for target acquisition.

Darkness affects CI requirements, particularly CI support to OPSEC. The EEFI do not change significantly, but the OPSEC measures needed to protect the EEFI do change. Noise and light disciplines are especially critical at night. Night is the optimum time for enemy patrols and agents to infiltrate and exfiltrate. Since night is also the time that friendly patrols are most frequently used, the coordination of routes, passage points, passwords, and other recognition signals is vital.

Deception is easier at night. But this is a two-edged sword. While the division can use darkness to deceive the enemy, the enemy will likewise use this opportunity to deceive the division commander. The division intelligence system must employ other collection means to compensate for the lack of visual confirmation.

HF communications signals, due to changes in the atmosphere, travel farther at night. This results in more unintentional jamming on division HF nets. HF radio operators must be more alert to unintentional jamming which the enemy might attempt to slip in with other interference. Use of directional antennas, which is important in all battlefield conditions, is especially critical at night. At night, more information must come from signals intercept operations due to degraded HUMINT capabilities.

While night operations have little effect on the capability of IEW systems, it does affect how they are employed. Some IEW sensors can help overcome the limitations imposed by darkness. GSRs are especially useful at night. This is especially true of the AN/PPS-15 radar, whose range approximates that of visual observation. GSRs and night observation devices used together in a mutually supporting role are very effective. GSRs can be used in other ways to compensate for the darkness. They can vector patrols and movement of other forces which have greater difficulty navigating at night.

While darkness provides protection for IEW systems, it also imposes special requirements. IEW teams must reconnoiter operational positions, ingress and egress routes, and enemy approach routes into positions during daylight when possible. This reconnaissance must include supplementary and alternate positions. IEW teams must train to emplace, displace, move, and operate their equipment at night.

MI units should habitually train with fire and maneuver units during night operations. Darkness increases the need for coordination.

IEW SUPPORT OF THE NIGHT ATTACK

The division attacks at night to gain or maintain the initiative, exploit daylight success, and to overcome certain disadvantages, such as—

- ☐ Inferior combat power.
- ☐ Enemy defensive obstacles and fortifications.

Detailed information and intelligence about the enemy and terrain is needed to support a night attack. Daylight reconnaissance provides the following information:

- ☐ Enemy positions.
- ☐ Obstacles and bypasses.
- ☐ Weak points or gaps in the defensive sector.
- ☐ Assembly areas, routes of advance, assault positions, and objectives.
- ☐ Landmarks to enhance control of the attack.

When time permits, a night reconnaissance is also conducted. However, the location and time of attack must not be compromised.

Surprise is a primary objective of a night attack. OPSEC during preparation for the attack is vital. Movement to and displacement from assembly areas is a critical phase of the operation. The division may plan and execute a deception operation to confuse the enemy concerning the division commander's intentions and the time and place of the attack. A well planned and executed night attack is not discovered until the assault has begun.

Attacking elements of the division use GSRs and night observation devices to observe the enemy and his activities during the attack. Night observation devices assist in navigation and avoidance of obstacles. Radars may be oriented in the direction of the attack and provide direction to the attacking force.

IEW SUPPORT OF THE NIGHT DEFENSE

The night defense has all the elements of a daylight defense. Defending division forces must deny the enemy the use of darkness to gain the element of surprise. They integrate IEW sensors, night observation devices, and patrols into a surveillance plan.

Division units conduct a daylight reconnaissance prior to or upon occupying defensive positions. The reconnaissance should—

- ☐ Determine avenues of approach into the defensive sector.
- ☐ Detect enemy preparation for attack, including reconnaissance activity.
- ☐ Identify good ambush sites along avenues of approach into the division sector.

IEW sensors, night observation devices, patrols, and illumination devices enhance the effectiveness of the night defense. Radars support friendly reconnaissance patrols and provide early warning to listening and observation posts concerning enemy movement. GSRs are reinforced with night observation devices. Together, they provide overwatch of obstacles and barriers. Remote sensors are employed along avenues of approach and defilade areas. USAF tactical air reconnaissance and SLAR missions provide early warning and detection of enemy assault and follow-on forces.

OPSEC is a critical factor in the night defense. OPSEC measures include noise and light discipline. COMSEC and electronic security must be strictly enforced. Generators are dug in and sandbagged to reduce their signatures.

INTELLIGENCE AND ELECTRONIC WARFARE OPERATIONS IN A NUCLEAR, BIOLOGICAL, AND CHEMICAL ENVIRONMENT

The MI battalion commander and his staff must consider how NBC weapons will affect operations. Enforcement of the three principles of NBC defense will enhance the survivability and effectiveness of MI operations. They are—

- ☐ Contamination avoidance.
- ☐ Protection.

- Decontamination.

CONTAMINATION AVOIDANCE

Contamination avoidance is the best way to minimize the impact of NBC weapons. It involves implementing passive defense measures, using the NBC warning and reporting system effectively, NBC reconnaissance, minimizing exposure, and avoiding known NBC hazards.

- Passive defense measures use NBC monitoring and detection equipment, chemical protection covers, and friendly vulnerability analysis techniques to avoid being targeted.
- Key leaders of the MI battalion formulate NBC reports and interpret reports received.
- Battalion and company NBC reconnaissance teams rapidly disseminate locations of NBC hazards for movement planning.
- Crews rotate and use protection shelters and available cover to minimize exposure to NBC hazards.
- Avoiding NBC hazard areas is the best course of action. This will minimize degradation caused by the use of protective equipment and negates the need for decontamination. FM 3-3 describes how units can avoid excessive contamination in the NBC environment and FM 3-4 describes means for protecting troops from NBC contamination.

In the event the MI battalion elements are forced to operate in a contaminated area or are operating where the threat of NBC attack is high, effective use of NBC protection, both individual and collective, is critical. The commander and his staff must be aware that use of protective equipment, while critical for survival, will result in degradation of mission effectiveness because—

- Use of individual equipment will result in excessive heat stress, loss of manual dexterity, visual acuity, and fatigue.
- Time needed for mission accomplishment will increase based on factors of fatigue, training, level of protection and weather. FM 3-4 contains estimated times for accomplishing tasks while in mission-oriented protective posture (MOPP) 4.
- Collective protective systems retrofitted to MI systems restrict operations. Entry and exit procedures must be followed to avoid contaminating the interior.
- Logistical requirements for the exchange of overgarments, rations, and water expand drastically. Approximately 13 quarts of drinking water per soldier per day is required to prevent dehydration during extended periods of MOPP 4 (see the following illustration for MOPP levels).
- Extensive training in MOPP analysis is required as MOPP-level selection is delegated to the lowest level possible.
- Extensive peacetime training and acclimatization is required as all members of the battalion must be capable of performing mission tasks while in MOPP 4.

Commanders and leaders must be aware that if forced to operate in MOPP 4—

- Personnel and equipment will be stressed to a greater level than normal.
- Times to accomplish IEW mission will increase.
- The logistical and maintenance burden will increase.

DECONTAMINATION

Decontamination is the reduction of the hazard to a level necessary to continue the mission. The MI battalion is responsible for the hasty and deliberate decontamination of its troops and equipment using battalion decontamination equipment.

MOPP LEVELS

LEVEL	OVERGARMENT	OVERBOOTS	MASK/HOOD	GLOVES
1	WORN*	CARRIED	CARRIED	CARRIED
2	WORN*	WORN	CARRIED	CARRIED
3	WORN*	WORN	WORN*	CARRIED
4	WORN	WORN	WORN	WORN

*In hot weather, the coat or hood can be left open for ventilation.

MOPP O - Soldiers carry the protective masks with load-carrying equipment, and the MOPP gear is readily available (that is, within the work area, vehicle, fighting position, or the like).

MASK ONLY* - Soldiers do not need to wear protective overgarments or rubber gloves as long as they are protected from direct skin exposure to liguid or solid contamination (transfer hazards).

*MASK ONLY is inappropriate when a blister agent is present.

Complete decontamination to peacetime levels is impossible due to absorption/ desorption. Decontamination is very time-, material-, and labor-intensive. Divisional NBC defense units will be tasked to assist divisional units. Company teams will have to depend on support from the battalion decontamination team and the supported brigade. For a more detailed description of decontamination, consult FM 3-5.

NUCLEAR CONSIDERATIONS

Three specific nuclear weapons effects will have a severe impact on electronic equipment utilized by the MI battalion. These effects are—

- Electromagnetic pulse (EMP). A sharp pulse of radio frequency (long wavelength) electromagnetic radiation produced when an explosion occurs in an symmetrical environment, especially airbursts. The intense electric and magnetic fields can damage unprotected electrical and electronic equipment over a large area.
- Transient radiation. Transient radiation effects on electronics (TREE) which are caused by gamma radiation given off by a nuclear detonation.
- Blackout. A temporary loss of communications due to the mechanical disturbance of the atmosphere caused by a nuclear detonation. This effects communications systems which use omnidirectional antennas.

EMP and TREE mitigation techniques will reduce the harmful effects of nuclear effects on MI unit operations. EMP mitigation techniques are employed for the protection of communications and key electronic collection systems. During periods of increased probability of the enemies' use of nuclear systems, redundant systems that can be shut down should be. All antennas on dormant systems should be removed. Shield the overall system by closing doors to shelters, air intakes, and any other openings. Stress the use of proper grounding techniques. Star grounds are best for EMP protection. Grounds and other wires should not cross or form loops.

TREE mitigation techniques include reset and alternative communication means:

- Reset or reload computer systems after nuclear detonations, maintain duplicate programs and data bases off line, and shield handheld and duplicate calculators.
- Under blackout conditions, use wire or messengers until electronic communications systems are restored to use.

For a more detailed description of EMP mitigation techniques, consult FC 50-16.

The effects of blast, thermal, and nuclear radiation must also be considered in terms of personal vulnerability and material damage. FCs 50-15 and 50-20 provide additional information concerning survivability and mitigation.

Glossary

A

A^2C^2	Army airspace command and control
ACofS	Assistant Chief of Staff
ACR	armored cavalry regiment
ADA	air defense artillery
ADC(O)	assistant division commander for operations
ADC(S)	assistant division commander for support
ADE	assistant division engineer
adj	adjacent
AE	aerial exploitation
AM	amplitude modulated
AMC	US Army Materiel Command
AME	airspace management element
anal	analysis
AO	area of operations
APOD	aerial ports of debarkation
ARTEP	Army Training and Evaluation Program
arty	artillery
AS	aerial surveillance
ASI	additional skill indicator
ASPS	all-source production section
at	antitank
ATE	automatic test equipment
Aug	August
AVIM	aviation intermediate maintenance
avn	aviation
AVUM	aviation unit maintenance
AWOL	absent without leave
AWS	air weather service

B

BAI	battlefield air interdiction
bde	brigade
BMCT	beginning of morning civil twilight
bn	battalion
BOMREP	bombing report
BSA	battalion support area
BTF	battalion task force

C

C^2	command and control
C^3	command, control, and communications

C^3CM	command, control, communications countermeasures
C^3I	command, control, communications, and intelligence
CA	cryptanalysis
CAA	combined arms Army
CAB	combat aviation brigade
CAS	close air support
C-E	communications-elctronics
CEOI	Communications-Electronics Operation Instructions
CESI	Communications-Electronics Standing Instruction
CEWI	combat electronic warfare and intelligence
CI	counterintelligence
CIF	central issue facility
C&J	collection and jamming
CM/CB	countermortor/counterbattery
CM&D	collection management and dissemination
coll	collection
commcen	communications center
COMINT	communications intelligence
COMINTADTSK	communications intelligence advisory tasking message
COMJAM	communications jamming
COMM	communication
COMSEC	communications security
CONUS	Continental United States
COSCOM	corps support command
CP	command post
crypto	cryptographic
CSR	controlled supply rate
CSS	combat service support
ctr	center
CTT	commander's tactical terminal

D

DA	Department of the Army
DAG	division artillery group
DF	direction finding
DISCOM	division support command
DISUM	daily intelligence summary
div	division
DIVARTY	division artillery
DMMC	division materiel management center
docu	document
DOD	Department of Defense
DS	direct support
DSA	division support area
DST	division support templates
DTAC	division tactical command post
DTO	division tactical operations
DTOC	division tactical operations center
DTOCSE	DTOC support element
DX	direct exchange

E

EA	ELINT analysis
EAC	echelons above corps
ECCM	electronic counter-countermeasures
ECM	electronic countermeasures
EECT	end of evening civil twilight
EEFI	essential elements of friendly information
EENT	end of evening nautical twilight
eff	effective
ele	element
ELINT	electronic intelligence
EMP	electromagnetic pulse
engr	engineering
EOB	electronic order of battle
EOD	explosive ordnance disposal
EPW	enemy prisoner of war
EQRPR	equipment repair
equip	equipment
ERTM	electronics intelligence requirement tasking message
ESM	electronic warfare support measures
EW	electronic warfare
EWAM	electronic warfare approval message
EWEM	electronic warfare employment message
EWMSNSUM	electronic warfare mission summary
EWRTM	electronic warfare requesting/tasking message
EWSO	electronic warfare staff officer

F

FA	field artillery
FAAO	field artillery aerial observers
FAAR	forward area alerting radar
FAIO	field artillery intelligence officer
FARP	forward arming and refueling points
FASCO	forward area support coordinator
FAST	forward area support team
FEBA	forward edge of the battle area
FIST	fire support teams
FLOT	forward line of own troops
FM	frequency modulated
FPO	field post numbers
FRAGO	fragmentary order
FREETEXT	free text message
FRG	Federal Republic of Germany
FROG	free rocket over ground
FS	fire support
FSB	forward support battalion
FSCOORD	fire support coordinator
FSE	fire support element
FSOP	field standing operating procedures
fwd	forward

	Assistant Chief of Staff, G1 (Personnel)
	Assistant Chief of Staff, G2 (Intelligence)
	Assistant Chief of Staff, G3 (Operations and Plans)
	Assistant Chief of Staff, G4 (Logistics)
	Assistant Chief of Staff, G5 (Civil Affairs)
IT	Greenwich mean time
d	ground
	general support
R	ground surveillance radar
T	ground sensor terminal

	high frequency
IC	headquarters, headquarters company
IOC	headquarters, headquarters and operations company
ISC	headquarters, headquarters and service company
IT	headquarters, headquarters troop
MAD	high-to-medium-altitude air defense
IS	host-nation support
w	howitzer
T	high pay-off target
	hour
JMINT	human intelligence
T	high value target

D	imitative electronic deception
W	intelligence and electronic warfare
WSE	IEW support element
INT	imagery intelligence
B	intelligence preparation of the battlefield
F	integrated processing facility
IR	initial photographic interpretation report
W	prisoner of war interrogation
el	intelligence
cp	intercept
TREP	intelligence report
TSUM	intelligence summary
	information requirements
S	intelligence and surveillance
W	indications and warning

J

JAAT	joint air attack team
JCS	Joint Chiefs of Staff
JINTACCS	Joint Interoperability of Tactical Command and Control Systems

K

KGB	Committee for State Security
KIA	killed in action
kt	kiloton

L

LIC	low intensity conflict
LLVI	low level voice intercept
LN	local national
LOB	line of bearing
LOC	lines of communication
LOS	line of sight
LRSC	long-range surveillance company
LRSD	long-range surveillance detachment
LSRU	long-range surveillance unit

M

M&A	management and analysis
MAC	maintenance allocation chart
MBA	main battle area
MCS	master control stations
mech	mechanized
MED	manipulative electronic deception
MEDEVAC	medical evacuation
METT-T	mission, enemy, terrain, troops, and time available
MI	military intelligence
MIJI	meaconing, intrusion, jamming, and interference
MIJIFEEDER	meaconing, intrusion, jamming, and interference feeder
MISREP	mission report
mm	millimeter
MMC	materiel management center
mvr	maneuver
mo	month
MOPP	mission-oriented protective posture
MORTREP	mortar bombing report
MOS	military occupational specialty
MOUT	military operations on urbanized terrain
MP	military police

RD	motorized rifle division
SB	main support battalion
RR	motorized rifle regiment
SC	major subordinate command
SCS	Manual Short-Range Air Defense Control System
sg	message
ST	maintenance support teams
TI	moving target indicator

AI	named areas of interest
BC	nuclear, biological, and chemical
CO	noncommissioned officer
CS	net control station
)	number
)ncom	noncommunications

B	order of battle
&I	operations and intelligence
P	observation post
PCON	operational control
PLAN	operation plan
PORD	operation order
PSEC	operations security
S	out station

AC	personnel administrative center
BO	property book officer
CAC	primary control and analysis center
CL	prescribed chemical load
ERINTREP	periodic intelligence report
ERINTSUM	periodic intelligence summary
IR	priority intelligence requirements
LDC	Primary Leadership Development Course
LL	prescribed load list
NL	prescribed nuclear load
OL	petroleum, oils, and lubricants
OMCUS	positioning of materiel configured to unit sets
X	post exchange

F	QUICKFIX

R

R&S	reconnaissance and surveillance
RAD	radian
RAG	regimental artillery group
RAOC	rear area operations center
RATT	radio teletypewriter
RCP	rear command post
rdr	radar
REC	radio electronic combat (not a US term)
recon	reconnaissance
RECCEXREP	reconnaissance exploitation report
REDTRAIN	readiness training
ref	reference
regt	regiment
REMBASS	Remotely Monitored Battlefield Sensor System
REMS	remotely employed sensors
rept	report
rexmit	retransmission
RI	request for information
rqr	required
RRI	response to request for information
RSR	resource status report
RSTA	reconnaissance, surveillance, and target acquisition
RWI	radio wire integration

S

S1	Adjutant (US Army)
S2	Intelligence (US Army)
S3	Operations and Training (US Army)
S4	Supply Officer (US Army)
SALUTE	size, activity, location, unit, time, and equipment
SAM	surface to air missile
SCI	special compartmented intelligence
SCIF	sensitive compartmented information facility
scty	security
SEAD	suppression of enemy air defenses
sec	section
SED	simulative electronic deception
SEMA	special electronic mission aircraft
SHELREP	shelling report
SI	special intelligence
SIDPERS	standard installation/division personnel system
SIEPCM	signals intelligence/electronic countermeasures planning/coordination message
SIGINT	signals intelligence
SIGMA	site information generation and materiel accountability
SIGSEC	signals security
SIR	specific information requirement
SISUM	sensitive information summary
SITMAP	situation map
SITREP	situation report

'A	staff judge advocate
,AR	side-looking airborne radar
)P	standing operating procedure
'ETSNAZ	KGB special purpose teams
'OD	seaports of debarkation
dn	squadron
?T	skill qualification test
;A	supply support activity
;M	surface-to-surface missile
;O	special security officer
'ANAG	standardization agreement
JPINTREP	supplemental intelligence report
JPIR	supplemental photographic interpretation report
c	service
VO	staff weather officer

	traffic analysis
;A	transcription and analysis
,ADS	The Army Authorization Documents System
:	tactical
,CP	tactical air control parties
,C-D	tactical deception
,CELINT	tactical ELINT
,CFIRE	tactical fire
,CREP	tactical report
,I	target areas of interest
,MC	tactical aircraft maintenance company
'AE	technical control and analysis element
'P	traffic control points
'S	tactical computer system
'T	tactical computer terminals
)A	tables of distribution and allowance
'	tactical exploitation
	tank
,E	target location error
)C	tactical operations center
)E	table of organization and equipment
/I	technical manual/team
/IDE	test, measurement, and diagnostic equipment
	truck
?EE	transient radiation effects on electronics
;O	tactical surveillance officer
;S	target selection standards
'Y	teletypewriter
/A	target value analysis

U

UHF	ultra high frequency
U/I	unidentified
US	United States
USAF	United States Air Force
USSSS	US SIGINT System
UW	unconventional warfare

V

veh	vehicle
VHF	very high frequency
vic	vicinity

W

wea	weather
WIA	wounded in action

X

XO	executive officer
XPLT	exploitation

Y

yr	year

References

QUIRED PUBLICATIONS

equired publications are sources that users must read in order to understand or to comply
ı this publication.

ny Regulations (ARs)

2	Supply Policy Below the Wholesale Level

ld Manuals (FMs)

	Fire support in Combined Arms Operations
	Long-Range Surveillance Unit Operations
4-2	Guide for Battalion S4
	Combat Communications
	Intelligence and Electronic Warfare Operations
	Intelligence Analysis
0	Counterintelligence
0A (S/NOFORN)	Counterintelligence Operations (U)
0	Brigade and Battalion IEW Operations
	Desert Operations
	Mountain Operations
4	Rear Battle
5	Operations
5	Staff Organization and Operations
28	Classes of Supply

Standardization Agreements (STANAGs)

2103	Reporting Nuclear Detonations, Radioactive Fallout, and Biological and Chemical Attacks and Predicting Associated Hazards publication unless sooner rescinded.

COMMAND

Command publications cannot be obtained through Armywide resupply channels. Determine availability by contacting the address shown. Field circulars expire three years from the date of publication unless sooner rescinded.

Field Circulars (FCs)

6-34-10/34-118	Targeting Process. May, 1985. Commander, USAICS, ATTN: ATSI-TD-PAL, Fort Huachuca, Arizona 85613-7000.
50-15	Nuclear Weapons Effects Mitigation Techniques. March 1984. Commander, CAC and Fort Leavenworth, ATTN: ATZL-SWA-DL, Fort Leavenworth, Kansas 66027-6900
50-16	Electromagnetic Pulse Mitigation Techniques. 1 February 1984. Commander, CAC and Fort Leavenworth, ATTN: ATZL-SWA-DL, Fort Leavenworth, Kansas 66027-6900
50-20	Nuclear Conduction on the Air-land Battlefields. February 1984. Commander, CAC and Fort Leavenworth, ATTN: ATZL-SWA-DL, Fort Leavenworth, Kansas 66027-6900
101-55	Corps and Division Command and Control. 28 February, 1985. Commandant, US Army Command and General Staff College, ATTN: ATZL-SWA-DL Fort Leavenworth, Kansas 66027-6900

DA Pamphlets (DA PAMs)

710-2-1	Using Unit Supply System, Manual Procedures

ROJECTED PUBLICATIONS

Projected publications are sources of additional information that are scheduled for printing t are not yet available. Upon print, they will be distributed automatically via pinpoint distbution. They may not be obtained from the USA AG Publications Center until indexed in A Pamphlet 310-1.

eld Manuals (FMs)

3	NBC Contamination Avoidance
4	NBC Protection
5	NBC Decontamination
-40 (S/NOFORN)	EW Operations (U)
-2 (S/NOFORN)	Collection Management (U)
-25	Corps IEW Operations

her Publications

Joint-Tactical Exploitation of National Systems

DOD Sensor Capabilities Handbook

JCS Pub 12 Tactical Command and Control Procedures for Joint Operations

JINTACCS User Handbook

Index

ASI 5M, 3-13

air defense artillery, 2-4

air-land battle

close operations, 3-3
deep operations, 3-2, 5-0, 5-22
rear operations, 2-5, 3-8, 4-15, 4-17, 5-23

area of interest, 1-9, 4-5

area of operations, 1-9

Army Training and Evaluation Program, 7-7

augmentation from corps, 2-10, 2-19

corps CI teams, 2-23
interrogation teams, 2-23

collection management, 4-8

asset management, 2-6, 3-0, 3-15, 4-8, 4-10
collection plan, 4-8
information requirements, 1-3, 3-6, 4-3, 5-1
intelligence annex, A-38
mission management, 3-0, 3-6, 3-7, 4-8, 4-10
mission tasking, 3-37
priority intelligence requirements, 1-3, 3-6, 4-3, 4-7, 5-1
request for intelligence information, A-16
requirements management, 3-0, 4-8
response to request for intelligence information, A-17
specific information requirements, 4-8

combat aviation brigade, 2-2, 2-13

QUICKFIX, 2-2, 2-3
QUICKFIX flight platoon, 2-13, 3-19, 3-43, 5-2, 6-11
reconnaissance
squadron, light division, 2-2

combat engineer battalion, 2-4

combat information, 1-1, 2-2, 3-3, 4-12

command, control, communications countermeasures, 1-4, 1-7, 1-8

command relationships, 3-26

communications, 3-30

division IEW, 3-34
military intelligence battalion, 3-37
multichannel, 3-30, 3-37
RATT, 2-9, 2-10, 3-33, 3-39

counterintelligence, 1-1, 1-3, 1-4, 2-10, 2-23, 4-15, 5-8, 5-16

black list, 4-19
black-listed, 4-19
gray list, 4-19
gray-listed, 4-19
teams, 2-10, 5-5
corps, 2-23
white list, 4-19
white-listed, 4-19

deception, 1-7, 4-15, 4-20, 5-16

direction finding, 2-10, 5-2

dissemination, 4-12

reporting, 4-12

division artillery, 2-3

division command post, 3-1

main CP, 3-2
DTOC, 2-13, 3-2
rear CP, 3-3
tactical CP, 3-3

division EPW cage, 2-4

division signal battalion, 2-5

division staff, 3-4

DTOCSE, 2-13, 3-2, 3-20, 4-17
ASPS, 3-7, 4-3, 4-10, 4-15, 5-1
C-E officer, 3-12
CI analysis section, 3-8, 4-15, 4-20
CM&D section, 3-6, 3-37, 4-8, 4-12, 5-1, 5-2
EW section, 3-7, 4-13
FAIO, 3-7, 4-11
FSCOORD, 3-10
FSE, 3-7, 3-11, 4-11
OPSEC staff element, 3-9, 4-20
G2, 3-2, 3-4, 4-2, 4-3, 4-11, 4-12, 5-1, 5-13
G3, 3-10, 4-11, 4-13

SSO, 3-6
terrain team, 3-9, 4-3, 4-6
weather team, 3-9, 4-3, 4-6

livision support command, 2-5, 2-17, 6-12

lectronic warfare, 1-1, 1-2, 1-4, 3-12

ECCM, 1-2
ECM, 1-2, 3-7, 4-14
jamming, 1-5, 5-10
deception, 1-7
ESM, 1-2, 4-14

;round surveillance radar, 2-10, 2-17, 2-23, 5-4

;UARDRAIL, 2-23, 5-5

commander's tactical terminal, 5-6

ntelligence, 1-1

human (HUMINT), 2-0
imagery (IMINT), 5-8
aerial surveillance, 5-8
electronic (ELINT), 2-11

ntelligence and electronic warfare

system, 3-0, 5-0

ntelligence and electronic warfare support element, 2-7, 2-11, 3-20, 3-22, 3-26

ntelligence cycle, 4-2

ntelligence preparation of the battlefield, 1-1, 3-7, 3-9, 4-3, 4-11, 5-0

analysis of the battlefield, A-41
battlefield area evaluation, 4-4
decision support template, 4-7
doctrinal template, 4-7
event analysis matrix, 4-7
event template, 4-7
named areas of interest, 5-1
target areas of interest, 4-7
terrain analysis, 4-6
threat evaluation, 4-6, 4-12
threat integration, 4-7
situation template, 4-7
weather analysis, 4-6

interrogation, 2-10, 2-23, 4-19, 5-5, 5-8, 5-12

division EPW cage, 2-4
document exploitation, 2-23
interrogation teams, 2-23, 5-5

long-range surveillance

company, 2-13
detachment, 2-12
unit, 5-4, 5-22

low intensity conflict, 2-19

maintenance, 6-8

IEW, 6-10

meaconing, intrusion, jamming, and interference, A-14

MIJIFEEDER, A-14
reports, 2-5, 3-13

MI battalion

S1, 6-4
S2, 3-16, 3-35
S3, 3-0, 3-15, 3-17, 3-22, 3-26
S4, 6-4
C-E staff officer, 3-19
TOC, 3-0, 3-14, 3-16, 3-37, 4-10, 4-13, 5-2
trains, 3-14

MI battalions

aerial exploitation (corps), 5-5
airborne/air assault divisions, 2-13
heavy division, 2-5
light division, 2-5, 2-19
tactical exploitation (corps), 2-15, 5-5

MI brigade

at corps, 2-23

MI companies

collection and jamming company heavy division, 2-8
collection and jamming company airborne/air assault divisions, 2-15
collection company, light division, 2-21
electronic warfare company, heavy division, 2-10
headquarters, headquarters and operations company, airborne/air assault divisions, 2-14
headquarters, headquarters and service company, heavy division, 2-6
headquarters, headquarters and service company, light division, 2-20
IEW company teams, 3-14, 3-19, 3-22, 5-1, 6-1
intelligence and surveillance company, airborne/air assault divisions, 2-16
intelligence and surveillance company, heavy division, 2-9

intelligence and surveillance company, light division, 2-22
service support company, airborne/air assault divisions, 2-18

military police, 2-4

noncommunications intercept, 2-11

platoon, 2-16

operations security, 2-10, 4-15, 5-10

friendly profile data base, 4-15
measures, 4-17

processing, 4-3, 4-10

QUICKFIX flight platoon, 2-2, 2-3, 2-14, 3-19, 3-43, 6-11

QUICKLOOK, 2-23, 5-5

rear area operation center, 2-4, 3-3

remotely employed sensors, 2-17

reports

analysis of the battlefield area, A-41
communications intelligence advisory tasking message, A-1
daily intelligence summary, A-2
division intelligence estimate, A-29
electronics intelligence requirement tasking message, A-3
electronic warfare approval message, A-4
electronic warfare employment message, A-5
electronic warfare mission summary, A-6
electronic warfare requesting/tasking message, A-8
intelligence, A-10
intelligence annex, A-38
intelligence estimate, A-23
intelligence summary, A-12
meaconing, intrusion, jamming, and interference feeder, A-14
NBC-1 nuclear, A-15
NBC-1 biological and chemical, A-16
request for intelligence information, A-16
response to request for intelligence information, A-17
sensitive information summary, A-19
situation, A-21
tactical, A-23

SIGINT processing platoon, 2-10, 5-2

signal security, 2-23

EEFI, 4-15, 4-20

situation development, 1-1

side-looking airborne radar, 5-8

staff estimates, 4-2

division intelligence estimate, A-29
intelligence estimate, 4-3

staff planning, 4-1

standard tactical missions, 3-24, 3-25

supplies, 6-5

distribution, 6-5

target development, 1-1, 1-2, 4-12

high payoff targets, 1-2, 3-7, 4-3, 4-11, 4-12, 5-0
high value targets, 1-2, 3-7, 4-3, 4-11, 4-12, 5-0
target areas of interest, 4-7
target value analysis, 4-3

task organization, 3-0, 5-1

task organizing, 3-19

tasking

mission, 4-14, 5-2

teams

CI, 2-10, 2-17, 2-23, 5-5
corps CI, 2-23
electronic countermeasures, 2-9, 2-15, 5-4
interrogation, 2-23
low-level voice intercept, 2-15
noncommunications intercept, 2-11
transcription and analysis, 2-8
voice collection, 2-9, 5-4

TEAMPACK, 2-10, 2-16, 5-2

technical control and analysis element, 2-3, 2-10, 2-11, 2-21, 3-17, 3-22, 4-10, 4-13

TRAILBLAZER, 2-10, 5-2

voice collection, 2-22

By Order of the Secretary of the Army:

JOHN A. WICKHAM, JR.
General, United States Army
Chief of Staff

Official:

R. L. DILWORTH
Brigadier General, United States Army
The Adjutant General

DISTRIBUTION:

Active Army, USAR, and ARNG: To be distributed in accordance with DA Form 12-11A, Requirements for Military Intelligence Bn, CEWI (Division) (Qty rqr block no. 476); Ground Surveillance Co, MI Bn, CEWI (Division) (Qty rqr block no. 477); and Collection and Jamming Co, MI Bn, CEWI (Division) (Qty rqr block no. 478).

* U.S. GOVERNMENT PRINTING OFFICE : 1994 O - 160-850