TECHNICAL MANUAL

ARMY AMMUNITION DATA SHEETS

FOR

LAND MINES

(FSC 1345)

DISTRIBUTION STATEMENT A: Approved for public release; distribution is unlimited.

HEADQUARTERS, DEPARTMENT OF THE ARMY

1 SEPTEMBER 1994

TM 43-0001-36
C3

CHANGE

NO. 3

HEADQUARTERS
DEPARTMENT OF THE ARMY
Washington, DC, 14 April 2000

ARMY AMMUNITION DATA SHEETS
FOR
LAND MINES (FSC 1345)

DISTRIBUTION STATEMENT A: Approved for public release; distribution is limited.

TM 43-0001-36, dated 01 September 1994, is changed as follows:

1. Remove old pages and insert new pages as indicated below.
2. New or changed material is indicated by a vertical bar in the margin of the page.
3. Added or revised illustrations are indicated by a vertical bar adjacent to the illustration identification number.

Remove pages	Insert pages
A and B	A and B
2-13 and 2-14	2-13 and 2-14
3-17 and 3-18	3-17 and 3-18

File this change sheet in front of the publication for reference purposes.

By Order of the Secretary of the Army:

ERIC K. SHINSEKI
General, United States Army
Chief of Staff

Official:

JOEL B. HUDSON
Administrative Assistant to the
Secretary of the Army
0009102

Distribution:

To be distributed in accordance with initial distribution number (IDN) 340853, with requirements for TM 43-0001-36.

CHANGE

NO. 2

HEADQUARTERS
DEPARTMENT OF THE ARMY
Washington, DC., 15 September 1997

ARMY AMMUNITION DATA SHEETS
(LAND MINES (FSC 1345))

DISTRIBUTION STATEMENT A: Approved for public release; distribution unlimited.

TM 43-0001-36, dated 01 September 1994, is changed as follows:

1. Cross out information on inside cover. The information is changed and placed on page a.

2. Remove old pages and insert new pages as indicated below. Changed material is indicated by a vertical bar in the margin of the page. Added or revised illustrations are indicated by a vertical bar adjacent to the identification number.

Remove pages	Insert pages
i and ii	i and ii
3-7 and 3-8	3-7 and 3-8

3. File this change sheet in front of the publication for reference purposes.

By Order of the Secretary of the Army:

DENNIS J. REIMER
General, United States Army
Chief of Staff

Official:

JOEL B. HUDSON
Administrative Assistant to the
Secretary of the Army
03953

Distribution:

To be distributed in accordance with IDN 340853, with requirements for TM 43-000-36.

CHANGE

NO. 1

HEADQUARTERS
DEPARTMENT OF THE ARMY
Washington, DC, *30 June 1997*

ARMY AMMUNITION DATA SHEETS
(LAND MINES (FSC 1345))

TM 43-0001-36, dated 01 September 1994, is changed as follows:

1. Cross out information on inside cover. The information is changed and placed on page a.

2. Remove old pages and insert new pages as indicated below. Changed material is indicated by a vertical bar in the margin of the page. Added or revised illustrations are indicated by a vertical bar adjacent to the identification number.

Remove pages	Insert pages
A and B	None
i and ii	i and ii
8-5 and 8-6	8-5 and 8-6

2. File this change sheet in front of the publication for reference purposes.

By Order of the Secretary of the Army:

DENNIS J. REIMER
General, United States Army
Chief of Staff

Official:

Administrative Assistant to the
Secretary of the Army
03767

Distribution:
To be distributed in accordance with IDN 340853, with requirements for TM 43-000-36.

LIST OF EFFECTIVE PAGES

INSERT LATEST CHANGED PAGES. DESTROY SUPERSEDED PAGES.

NOTE The portion of the text affected by the changes is indicated by a vertical line in the outer margin of the page. Changes to illustrations are indicated by a vertical line adjacent to the identification number.

Dates of issue for original and changed pages are:

Original .....0 .....1 Sep 1994
Change .....1 ..... 30 Jun 1997
Change .....2 .....15 Sep 1997
Change .....3 .....14 Apr 2000

TOTAL NUMBER OF PAGES IN THIS PUBLICATION IS 128 CONSISTING OF THE FOLLOWING:

Page No.	*Change No.
Cover	0
Inside Cover	0
A	3
B	0
i	2
ii	0
1-1and 1-2	0
2-1 thru 2-13	0
2-14	3
2-15 thru 2-18	0
3-1 thru 3-6	0
3-7 and 3-8	2
3-9 thru 3-17	0
3-18	3
3-19 thru 3-22	0
4-1 and 4-4	0
5-1 thru 5-32	0
6-1 thru 6-24	0
7-1 thru 7-6	0
8-1 thru 8-4	0
8-5 and 8-6	1
8-7 and 8-8	0
9 -1 thru 9-6	0

*Zero in this column indicates an original page

THIS PAGE INTENTIONALLY LEFT BLANK

Technical Manual)
)
)
No. 43-0001-36)

HEADQUARTERS
DEPARTMENT OF THE ARMY
Washington, DC, 1 September 1994

ARMY AMMUNITION DATA SHEETS
(LAND MINES (FSC 1345))

REPORTING ERRORS AND RECOMMENDING IMPROVEMENTS

You can help improve this manual. If you find any mistakes or if you know of a way to improve the procedures, please let us know. You may mail, e-mail, or FAX your response. Mail your letter, DA Form 2028 (Recommended Changes to Publications and Blank Forms) or DA Form 2028-2 located in the back of this manual direct to: Commander, U.S. Army TACOM, Armament Research, Development and Engineering Center, ATTN: AMSTA-AR-WEL, Picatinny Arsenal, NJ 07806-5000. E-mail address is LSS@PICA.ARMY.MIL. FAX number is Commercial (201) 724-4633, DSN 880-4633. A reply will be furnished to you.

		Page
CHAPTER 1.	INTRODUCTION	1-1
	Purpose	1-1
	Scope	1-1
	Metric Conversion Chart	1-1
	Key to Abbreviations and Symbols	1-1
	Quantity-Distance Classes and Storage Compatibility Group	1-1
CHAPTER 2.	ANTITANK MINES AND AERIALLY DISPERSED ANTITANK/ANTIVEHICLE MINES	
Section I.	Mines, Antitank	
	Mine, Antitank: HE, Heavy, M15	2-3
	Mine, Antitank: HE, Nonmetallic, M19	2-5
	Mine, Antitank: HE, Heavy, M21	2-7
	Mine, Antitank: HE, M24	2-9
	Mine, Antitank: HE, M66	2-11
	Mine, Antitank: HE, M75	2-13
Section II.	Mines, Aerially Dispersed, Antitank/Antivehicle Mines	
	Mine Dispersing Subsystem, Aircraft: M56	2-17
CHAPTER 3.	ANTIPERSONNEL MINES	
	Mine, Antipersonnel: M2A4 (M2A4B2)	3-3
	Mine, Antipersonnel: M3	3-5
	Mine, Antipersonnel: M14	3-7
	Mine, Antipersonnel: M16 (M16A1, M16A2)	3-9

*This manual supersedes TM 43-0001-36, 14 February 1977, including all changes.

CHAPTER 3. ANTIPERSONNEL MINES (Continued)
Mine, Antipersonnel: M18A1 3-13
Mine, Antipersonnel: M26..... 3-15
Mine, Antipersonnel: HE, M74..... 3-17
Mine, Antipersonnel: M86, Pursuit Deterrent Munition (PDM)..... 3-21
CHAPTER 4. CHEMICAL AGENT MINES
Mine, Chemical Agent, VX: M23..... 4-3
CHAPTER 5. PRACTICE, INERT, TRAINING, AND DUMMY ITEMS
Mine, Antipersonnel, Practice: M8 (M8A1)..... 5-3
Mine, Antitank, Practice, Light: M10 5-5
Mine, Antitank, Practice: M12 Series..... 5-7
Mine, Antipersonnel: M16A1, Inert 5-9
Mine, Antipersonnel, Training: M81 5-11
Mine, Antitank, Training: M80..... 5-13
Mine, Antitank, Practice, Heavy: M20..... 5-15
Mine, Antipersonnel, Practice: M35..... 5-17
Mine, Antipersonnel, Practice: M68..... 5-19
Mini, Antitank, Practice: M69..... 5-21
Activator, Antitank Mine, Practice: M1 5-23
Mine, Antitank, Practice: M79..... 5-25
Fuze, Mine, Antitank: M603, Inert..... 5-27
Fuze, Mine, Antitank, Practice: M604 5-29
Fuze: M606, Inert..... 5-31
CHAPTER 6. ACTIVATORS AND FUZES
Activator, Antitank: M1 (M2) 6-3
Burster, Field, Incendiary: M4..... 6-5
Fuze, Mine, Combination: M6A1 6-7
Fuze, Mine, Combination: M7A1 6-9
Fuze, Mine, Combination: M10 (M10A1, M10A2) 6-11
Fuze, Mine, AT: M603..... 6-13
Fuze, Mine, Combination: M605..... 6-15
Fuze, Mine, Antitank, Nonmetallic: M606 6-17
Fuze, Mine, Antitank: M607..... 6-19
Fuze, Mine, Antitank: M608..... 6-21
Fuze, Mine: M624 6-23
CHAPTER 7. PROJECTILES WITH ANTITANK MINES
Projectile, 155 Millimeter: AT, M718 and M718A1 with
Antitank Mines 7-3
Projectile, 155 Millimeter: AT, M741 and M741A1 with
Antitank Mines 7-5
CHAPTER 8. MINE CANISTERS
Canister, Mine: M87 8-3
Canister, Mine: M87A1..... 8-5
Canister, Mine, Practice: M88 8-7
CHAPTER 9. DISPENSER AND MINES
Dispenser and Mines, Ground: M131..... 9-3

CHAPTER 1
INTRODUCTION

1-1. Purpose

This manual is a reference handbook published as an aid in training, familiarization, and identification of land mines and mine fuzes. This manual is not authorization for requisition, stockage, maintenance, or issue of the materiel described herein.

1-2. Scope

a. For each item of materiel, there are illustrations and descriptions together with characteristics and related data. Included in the related data are weights, dimensions, performance data, packing, shipping and storage data, type classification, and logistics control codes (LCC).

b. Information concerning supply, operation, and maintenance of the items will be found in the publications referenced for those items. A complete listing of these publications is maintained in DA Pam 310 series indexes.

c. Within this manual, items with the following type-classifications are included:

(1) Standard (LCC-A, LCC-B).

(2) Contingency (CON).

(3) Limited procurement (LP).

(4) Reclassified obsolete (OBS) for regular Army use, but used by National Guard or Reserve units.

(5) Reclassified OBS for all Army use, but used by Marine Corps, Air Force or Navy.

(6) Reclassified OBS, no users, but US stocks remain. Items with the following type-classification are not included: Reclassified OBS for all U.S. use. No U.S. stocks remain. (Foreign use or stock may remain).

d. Numerical values, such as weights, dimensions, candlepower, etc., are nominal values, except when specified as maximum or minimum. Actual items may vary slightly from these values. Allowable limits can be obtained form the drawings indicated in the data sheets.

1-3. Metric Conversion Chart

For approximate conversions to/from metric measures see Table 1-1.

1-4. Key to Abbreviations and Symbols

AD	Anti-disturbance
AP	Armor piercing
APERS	Antipersonnel
AT/AV	Antitank/antivehicle
CON	Contingency
DCP	Dispenser control panel
E-CELL	Electrochemical cell
Frag	Fragmentation
HE	High-explosive
LCC	Logistics control codes
LP	Limited procurement
LVD	Low voltage detector
NM	Nonmetallic
OBS	Obsolete
SD	Self-destruct
VX	Persistent toxic (casualty) nerve gas

1-5. Quantity-Distance Classes and Storage Compatibility Groups

Quantity-Distance Classes and Storage Compatibility Groups. Quantity-Distance (QD) classes and Storage Compatibility groups (SCC) listed in this manual are changed. For conversion to new system see Table 1-2.

Table 1-1. Metric Conversion Chart

Approximate Conversions to Metric Measures

Symbol	When You Know	Multiply By	To Find	Symbol
		LENGTH		
in.	inches	2.5	centimeters	cm
ft	feet	30	centimeters	cm
yd	yards	0.9	meters	in.
mi	miles	1.6	kilometers	km
		AREA		
$in.^2$	square inches	6.5	sq centimeters	cm^2
ft^2	square feet	0.009	sq meters	m^2
yd^2	square yards	0.8	sq meters	m^2
mi^2	sq miles	2.6	sq kilometers	km^2
	acres	0.4	hectares	ha
		WEIGHT		
oz	ounces	28	grams	g
lb	pounds	0.45	kilograms	kg
	short tons (2000 lb)	0.9	tonnes	t
		VOLUME		
tap	teaspoons	5	milliliters	ml
Tbsp	tablespoon	15	milliliters	ml
fl oz	fluid ounces	30	milliliters	ml
c	cups	0.24	liters	1
pt	pints	0.47	liters	1
qt	quarts	0.95	liters	1
gal	gallons	3.8	liters	1
ft^3	cubic feet	0.03	cubic meters	m^3
yd^3	cubic yards	0.76	cubic meters	m^3

TEMPERATURE

Symbol	When You Know	Subtract	Multiply	To Find	Symbol
°F	Fahrenheit	32	by 0.55	Celcius	°C

Approximate Conversions from Metric Measures

		LENGTH		
mm	millimeter	0.04	inches	in.
cm	centimeters	0.4	inches	in.
m	meters	3.3	feet	ft
m	meters	1.1	yards	yd
km	kilometers	0.6	miles	mi
		AREA		
cm^2	square centi-meters	0.16	square inches	in^2
m^2	square meters	1.2	square yards	yd^2
km^2	square kilo-meters	0.4	square miles	mi^2
ha	hectares (10,000m2)	2.5	acres	
		WEIGHT		
g	grams oz	0.035	ounces	
kg	kilograms lb	2.2	pounds	
t	tonnes	1.1	short tons	
		VOLUME		
ml	milliliters	0.03	fluid ounces	fL oz
1	liters pt	2.1	pints	
1	liters qt	1.06	quarts	
1	liters gal	0.26	gallons	
ms	cubic meters	35	cubic feet	ft
ma	cubic meters	1.3	cubic yards	yd^3

TEMPERATURE

Symbol	When You Know	Multiply	Add	To Find	Symbol
°C	Celcius	by 1.8	32	Fahrenheit	F

Table 1-2. Quantity-Distance Classes and Storage Compatibility Groups

Quantity-distance hazard class [1/]		Storage compatibility group [1/3/]
Old	New v	Typical - New
8	6.1	
7	1.1	D
6	1.2 (18)	E
5	1.2 (12)	
4	1.2 (08)	F
3	1.2 (04)	G
2	1.3	C
1	1.4	S

1otes:

[1/] New QD and SCG's are compatible with classes used by NATO nations.

[2/] Numbers in parenthesis are minimum distance x 100 feet to protect against specific fragment hazards and vary with items and types of ammunition. (Refer to TM 9-1300-206.)

[3/] There is no simple conversion from old SCG's to new system. The SCG groups listed in this column are typical for the majority of items in the corresponding listed QD class but do not apply to every individual item in the class. For SCG of individual items refer to TM 9-1300-206.

CHAPTER 2

ANTITANK MINES AND AERIALLY DISPERSED ANTITANK/ANTIVEHICLE MINES

Section I. MINES, ANTITANK

MINE, ANTITANK: HE, HEAVY, M15

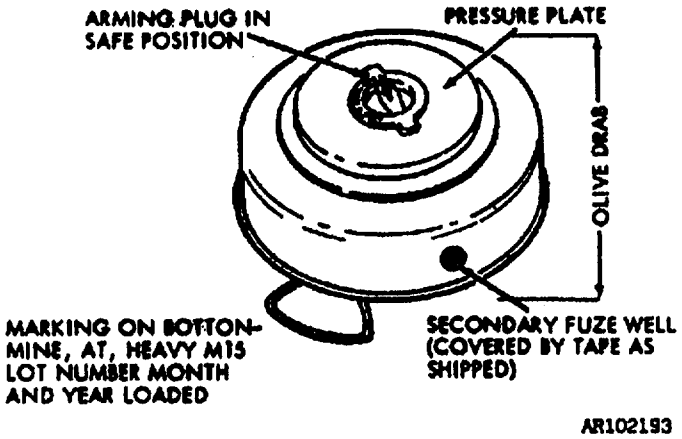

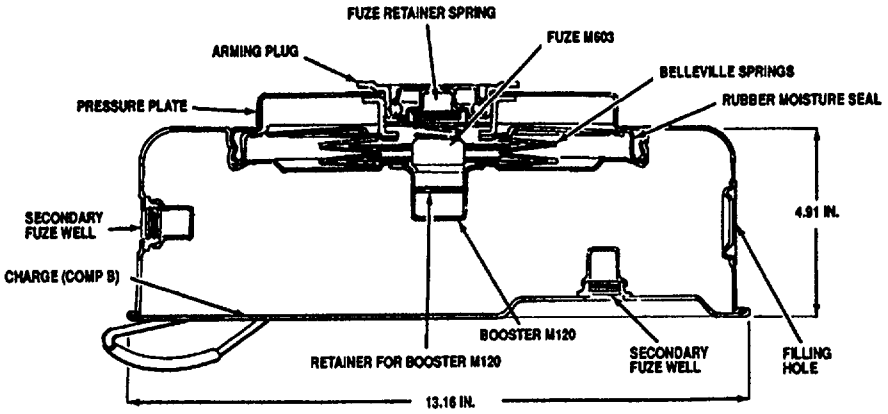

U
AR 102194

Type Classification:

S 37119 (LCC-A)

Use:

Antitank mine M15 is intended for use against heavy tanks and other types of heavy tracked and wheeled vehicles.

Description:

The mine is a flat, steel cylinder with the fuze and most of the other components located concentrically with the vertical axis. Two secondary fuzing wells, threaded to accept M1 activators, are located, one in the side and one in the bottom, to provide for alternate fuzing and booby trapping arrangements. The mine, as shipped, has these wells covered with tape. The recessed knob in the M4 arming plug, located top, center, carries an arrow, and may be set to indicate Safe, Danger, or Armed, as indicated on the rim of the plug. A carrying handle, attached to the underside of the mine, is provided. The mine body houses the arming plug, pressure plate, multiple element belleville spring primary fuze, M120 booster, and main explosive charge. The mine is shipped with fuze not assembled, with the fuze packed separately in a metal can in the packing box. Arming of the mine requires the use of the M20 wrench, with which the arming plug is unscrewed, permitting insertion of the fuze. Following removal of the safety for the fuze is inserted in the well. After verifying that the setting knob and shutter are in the Safe position, the arming plug is screwed into place and wrenched tight. The mine is armed by rotating the setting knob to the Armed position with the M20 wrench.

Functioning:

When the shutter of the arming plug is in the Armed position, a force of 350 to 750 pounds on the pressure plate of the mine will allow the load to be transferred to the fuze. This force activates the fuze mechanism, driving the firing pin into the detonator. This initiates the M120 booster in the bottom of the fuze well, which, in turn, detonates the main charge.

Tabulated Data:

Model number M15
Type ..... AT-Heavy
Drawings:
Assembly..... 82-0-189
Weight - fuzed ..... 31.46 lb
Dimensions:
Height..... 4.91 in.
Max diameter ..... 13.25 in.
Material Steel

Threads:
Arming plug well..... 2.313-14NS-1A
Secondary fuze well 0.75-12NS
Fuze (see separate
write-up) M603
Temperature Limits:
Firing - lower ..... -40°F
- upper..... +125°F
Storage lower ..... -60°F
- upper..... + 160°F
Shipping and Storage Data:
Packing arrangement ..... 1 mine w/fuze, 1 activ in can, & 1 wrench, all in wooden box
Weight..... 49 lb
Dimensions ..... 18 x 15-1/8 x 7-1/2 in.
Cube ..... 1.17 cu ft
Hazard class/division and
storage compatibility
group 1.1D
UNO serial number- 0137
UNO proper shipping
name ..... Mines
DOT shipping class - Class A Explosive
IDOT marking..... EXPLOSIVE MINES
DODAC 1345-K180
Painting ..... Olive Drab
Marking ..... Yellow

Explosive Data:

Item	Type	Weight AV	Weight Metric
M603 Fuze -			
M45 Det	PA #100	1.85 gr	120 mg
Lead Az	4.24 gr	272 mg	
RDX	1.85 gr	120 mg	
M120 Boost	RDX	172.5 gr	11.18 gm
M15 Mine -			
Main chg	Comp B	22.75 lb	10.33 kg
M1 Activator	(if used)		
M31 Det	Ar Ign Mx	2.3 gr	150 mg
Lead Az	3.9 gr	250 mg	
Tetryl	4.2 gr	270 mg	
Booster	Tetryl	36 gr	2.3 gm

Reference:
TM 9-1345-203-12&P

MINE, ANTITANK: HE, NONMETALLIC, M19

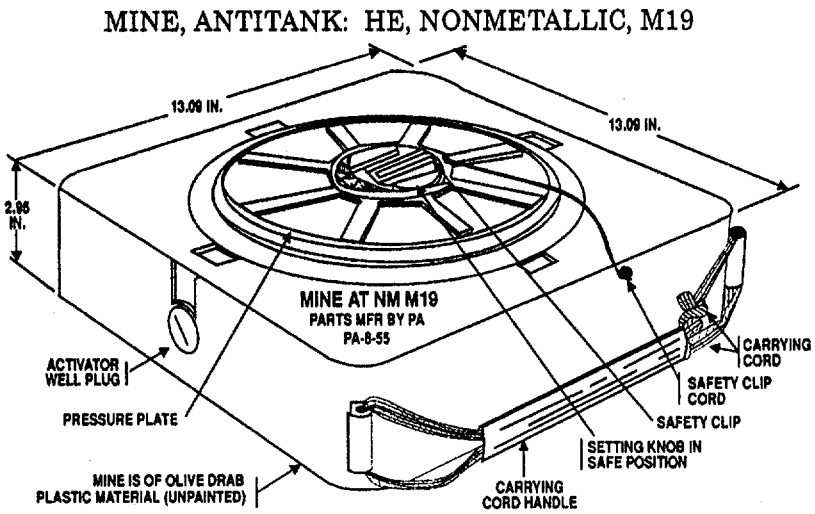

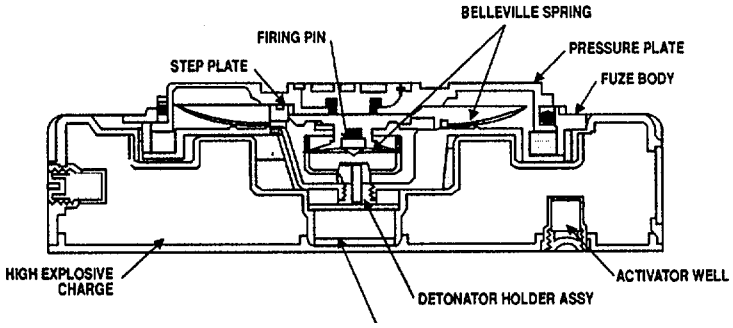

Type Classification:

S 37119 (LCC-A)

Use:

Antitank mine M19 is used against heavy tanks and heavy tracked and wheeled vehicles. The M19 mine is of nearly all-plastic construction and is nondetectable by magnetic mine detectors. The mine uses the mechanical pressure type fuze M606, also constructed of plastic material.

Description:

The mine has a square case of olive drab plastic material with both embossed and yellow markings. It can be easily identified in the dark by its box shape. The mine is packed assembled with the M606 fuze, less the detonator holder, loading assembly, which is packed separately in the same box. Two letters, A and S, on the pressure plate signify Armed and Safe, respectively. The mine body holds the high-explosive charge, the tetryl or RDX booster pellet, and the M606 fuze. There is a well, threaded to accept an M2 activator for booby trapping in the side of the mine and another one in the bottom. In mines of early manufacture these wells are closed with plugs and gaskets, while in those of later manufacture the wells are closed with strips of adhesive tape. The fuze body contains the pressure plate, two belleville springs, setting knob, step plate firing pin assembly, and detonator. The upper belleville spring allows the fuze to function with application of predetermined force. The lower belleville spring drives the firing pin into the detonator when the pressure plate is forced downward. The setting knob turns the step plate from the Safe to Armed position and the safety clip locks the setting knob in the Safe position.

Functioning:

With safety clip removed and setting knob set on A, a force of 300 to 500 pounds applied to the pressure plate causes the lower belleville spring to drive the firing pin into the detonator, thus initiating the booster pellet and setting off the main charge.

Tabulated Data:

Model number M19
Type ..... AT, Non-Metallic
Drawings:
Assembly..... 9209328
Weight 27.68 lb
Dimensions:
Height s/M606 fuze..... 3.7 in.
Max width (square)..... 13.09 in.
Material ..... Plastic

Threads:
Fuze detonator holder well..... 0.563-12UNC-1A
Secondary fuze well 0.75-UNS-18
Fuze (see separate write-up) M606
Temperature Limits:
Firing - lower ..... -40°F
- upper..... + 125°F
Storage - lower..... -60°F
- upper..... +160°F
Shipping and Storage Data:
Packing arrangement ..... 2 mines, 2 fuzes, 1 wrench, & 2 activators in bag. 2 bags (4 mines) in wire-bound box
Weight..... 124.5 lb
Cube ..... 3.9 cu ft
Hazard class/division and storage compatibility group..... 1.1D
UNO serial number..... 0137
UNO proper shipping name Mines
DOT shipping class ..... Class A Explosive
DOT marking..... EXPLOSIVE MINES
DODAC 1345-K250
Painting ..... Olive Drab
Marking ..... Yellow

Explosive Data:

Item	Type	Weight AV	Weight Metric
M606 Fuze -			
M50 Det	PA #100	1.62 gr	105 mg
	Lead Az	3.85 gr	250 mg
	RDX	7.85 gr	510 mg
M19 Mine -			
Booster	RDX	805 gr	52.1 gm
Main chg	Comp B	21 lb	9.53 kg
M2 Activator - (when used)			
M31A1 Det	Ar Ign Mx	1.62 gr	105 mg
Lead Az	3.86 gr	250 mg	
Tetryl	4.17 gr	270 mg	
Pellet	RDX	40 gr	2.58 gm

Reference:
TM 9-1345-203-12&P

MINE, ANTITANK: HE, HEAVY, M21

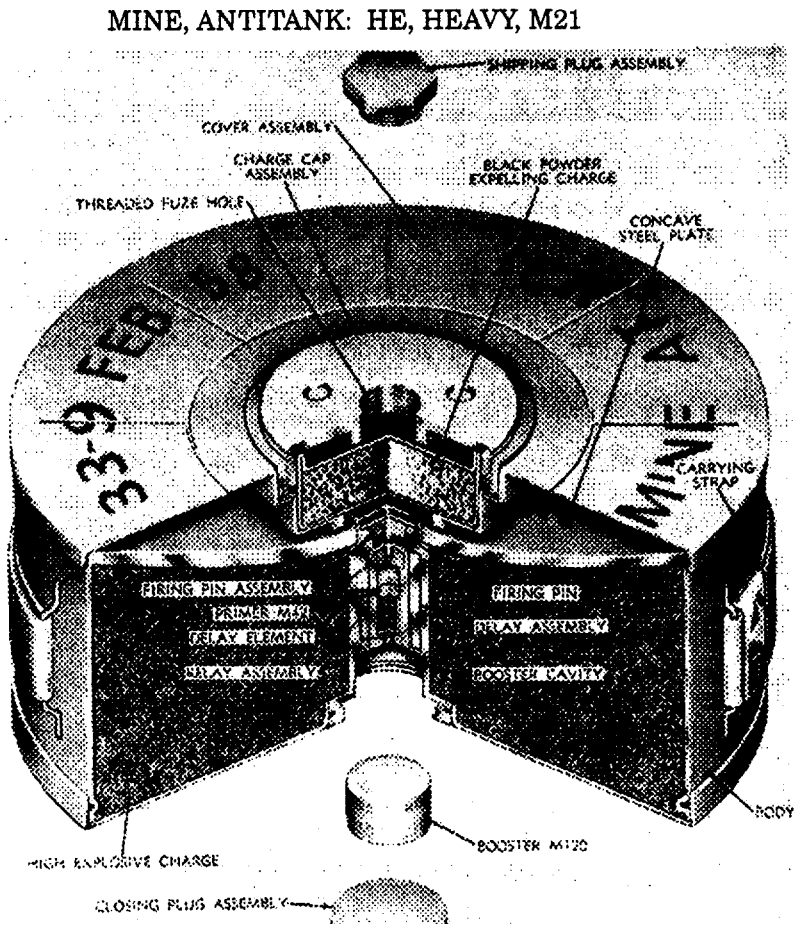

Type Classification:

S 37246 (LCC-A)

Use:

Mine M21 is used primarily for destroying tanks and tracked and wheeled vehicles. It is a standoff type that can penetrate 3-inch armor plate at a distance of 21 inches. It also functions as a blast-type mine.

Description:

Mine M21 is composed of a cover assembly and a cylindrical steel body. The cover assembly includes the charge cap assembly with a threaded fuze hole closed by a shipping plug, a black powder charge, and the cover. The mine body contains a concave steel dish, and HE charge, firing pin, and delay assembly. The delay assembly consists of the M42 primer, a delay element, and a relay charge. A booster is placed separately in the mine and it is assembled with the mine packing box when the mine is fuzed. The M607 fuze is screwed into the mine charge cap and the extension rod and extension rod adapter, if provided, are assembled to the fuze. The extension rod adapter was eliminated after 1963.

Functioning:

The fuze M607 for the mine is actuated by applying a horizontal force greater than 3.75 pounds at the end of the extension rod. The fuze is also actuated by a directly applied downward force of 290 pounds. The fuze ignites the black powder expelling charge in the mine and the resulting detonation opens up the mine cover and removes the earth covering the mine. Back pressure from the burning propellant drives the firing pin into the M42 primer which, in turn, ignites the delay assembly. After 0.15 second, the relay assembly is detonated, firing the M120 booster, which, in turn, fires the main charge. The steel dish is then driven at high velocity against the target. The arming wrench M26 is provided for use with this mine and fuze.

Tabulated Data:

Model number M21
Type ..... Antitank
Drawings:
  Assembly..... 8831341
Weight ..... 17.5 lb
Dimensions:
  Height - fuzed..... 8.125 in.
  Height w/ext rod ..... 32 in.
  Max diam ..... 9 in.
Material Steel
Threads:
  Fuze well..... 0.75-UNS-2B
  Booster Cavity..... 1.375-18NEF-2A
Fuze (see separate
  write-up) M607
Temperature limits:
  Firing - lower..... -40°F
  - upper..... +125°F
  Storage lower..... -60°F
  - upper..... + 160°F
Shipping and Storage Data:
  Packing arrangement ..... 2 mines w/2 fuzes w/2 boosters in barrier bag. 2 bags (4 mines) w/2 wrenches in wire-bound box
  Weight..... 90 lb
  Dimensions ..... 29-1/4 x 12-1/2 x13-1/2 in.
  Cube ..... 2.85 cu ft
  Hazard class/division and
    storage compatibility
    group..... 1.1D
  UNO serial number..... - 0137
  UNO proper shipping
    name - ..... Mines
  DOT shipping class - Class A Explosive
  DOT marking..... EXPLOSIVE MINES
DODAC 1345-K181
Painting ..... Olive Drab
Marking ..... Yellow

Explosive Data:

Item	Type	Weight AV	Weight Metric
M607 Fuze-			
M101 Primer		0.35 gr	22.7 mg
M46 Det	NOL #130	1.62 gr	105 mg
	Lead Az	4.31 gr	280 mg
	RDX	2.24 gr	1456 mg
M21 Mine-			
M120 Boost	RDX	172.48 gr	11.18 gm
	Lead Az	4.62 gr	300 mg
Relay Assy	RDX Type	4.23 gr	275 mg
Main chg	Comp H-6	10.8 lb	4.9 kg

Reference:

TM 9-1345-203-12&P

MINE, ANTITANK: HE, M24

MINE, ANTITANK: HE, M24

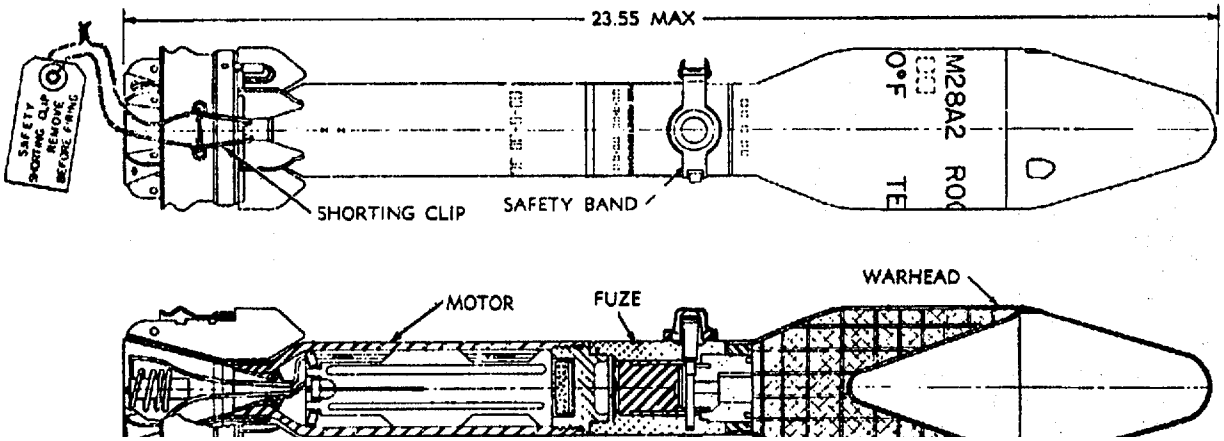

Type Classification:
S 8899 (LCC-B)

Use:
The antitank mine M24 is a remotely operated horizontal effects device, used to defend against tracked and wheeled vehicles. It supplements standard, vertical effects mines, in that off-route emplacement of the rocket permits mine of locations that could not otherwise be effectively mined.

Description:
The M24 mine has six basic components, plus auxiliary equipment, as follows:

Discriminator Assembly, Antitank Mine M2. This assembly consists of a 22 meter length of wire connected to an 11 meter plastic-covered pressure actuated switch. The switch is composed of four 2.6 meter segments with spacing between them. To assure operation with tracked or wheeled vehicles, pressure is required on two of the adjacent segments to close the electrical circuit.

Rocket, HE, 3.5-inch Antitank, M28A2. This rocket has been modified by the addition of the folding fin assembly and by splicing the leads of the rocket connecting cable to the rocket motor. The 15 meter rocket connecting cable terminates in a connector for attachment to the M61 firing device.

Launcher, Rocket, M143. The launcher is a 24 inch long plastic tube housing the rocket.

Elevation and Azimuth Sighting Assembly. The sighting and aiming equipment consists of a tube containing a peepsight and crosshairs, and a pair of self centering legs for positioning of the launcher tube.

Firing Device, Demolition, M61. This assembly consists of an arm/safe toggle switch together with an indicator light mounted in a box which has provision for batteries. The box is equipped with a safety cover, connectors for the discriminator assembly, and the rocket cable assembly and a transistorized firing circuit. Batteries are issued separately and are not installed until mine is being employed.

Bipod Assembly. This accessory provides an adjustable base for the launcher. It consists of a two-pronged base, a short vertical rod with a knurled nut which provides adjustment in elevation, and a yoke which grips the launcher tube near one end. Either forward or aft end may be chosen, depending on type of aiming correction desired. The auxiliary equipment consists of a discriminator spool and accessory pouches. The discriminator assembly is wound on the outside of the spool and the core of the spool forms an accessory compartment in which the bipod assembly, the sighting assembly, and the firing device are carried. The entire M24 mine is carried in two green nylon pouches and when strapped together they form the M190 antitank mines case. One pouch contains the rocket launcher and the other contains the discriminator spool.

Functioning:

A vehicle crossing the pressure switch at two adjacent segments completes the circuitry to the firing device which electrically fires the igniter in the rocket motor. The igniter initiates the propellant and launches the rocket. The fuze is initiated upon impact and penetration of the target vehicle is effected by the shape charge warhead. Although the rocket has a maximum range of 825 meters it is used in the M24 mine to cover a range up to 30 meters.

Tabulated Data:

Model number M24
Type ..... Off-route, AT
Drawings:
  Assembly..... 9207411
Weight:
  Total ..... 18 lb
  Rockets only..... 9 lb
Dimensions:
  Rocket:
    Length ..... 23.55 in.
    Max diam..... 9 in.
Material:
  Rocket:
    Motor ..... Steel
    Warhead..... Copper/Steel
Fuze:
  Rocket..... M404A2
  Type ..... Mech-BD
Battery Type (not included):
  2 required for Firing
    Device BA-3202/U
Temperature Limits:
  Firing - lower..... -40°F
  - upper..... +125°F
  Storage - upper..... +120°F
Shipping and Storage Data:
  Packing ..... 2 mines, incl fuzed rockets in wire-bound box
  Weight..... 55 lb
  Dimensions ..... 28-1/8 x 13-7/8 x 10-3/4 in.
  Cube ..... 2.7 cu ft
  Hazard class/division and storage compatibility group 1.1E
  UNO serial number..... 0181
  UNO Proper shipping name ..... Rockets
  DOT shipping class - Class A Explosive
  DOT marking- ROCKET AMMUNITION W/EXPLOSIVE PROJECTILES
DODAC 1345-K182
Painting ..... Olive Drab
Marking ..... Yellow

Explosive Data:

Item	Type	Weight AV	Weight Metric
M28A2 Rocket Motor -			
M2 Elec Sq	flsh pdr	1 gr	65 mg
Igniter	blk pdr	54 gr	3.5 gm
Propellant	M7	0.35 lb	159 gm
M404A2 Rocket Fuze -			
	PA #100	1.62 gr	105 mg
M41 Det	Lead Az	3.86 gr	250 mg
	Tetryl	1.67 gr	108 mg
Booster	Tetryl	75 gr	4.86 gm
M28A2 Rocket Warhead -			
Shaped Chg	Comp B	1.88 lb	853 gm

Reference:

TM 9-1345-203-12&P

MINE, ANTITANK: HE, M66

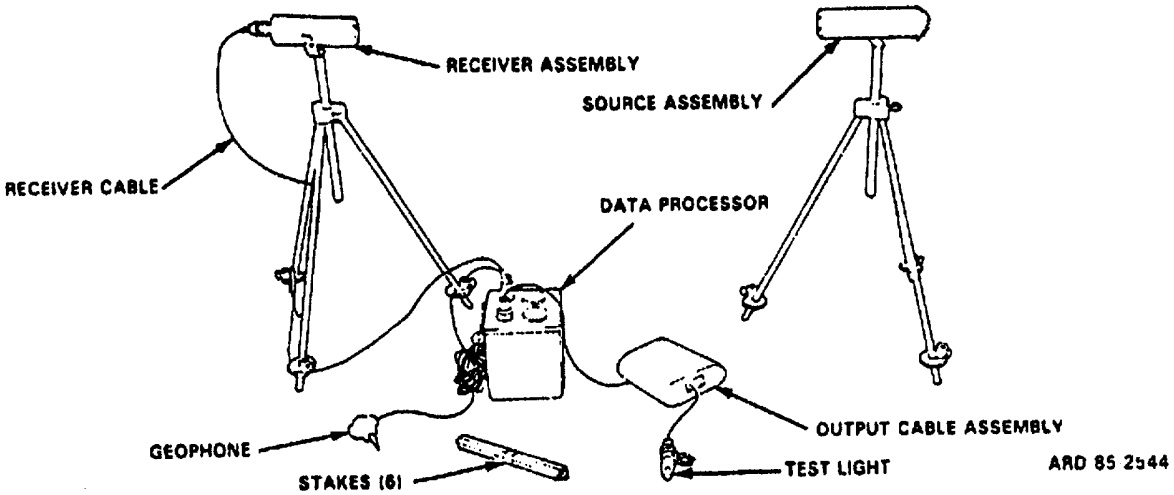

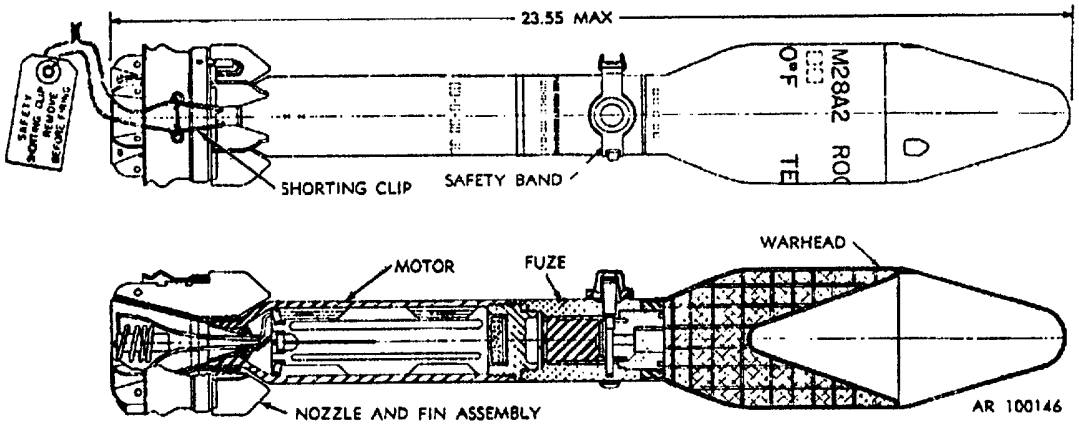

Type Classification:

OBS 03866008

Use:

The antitank mine M66 is a remotely actuated, horizontal effects device, used to defend against tracked and wheeled vehicles. It supplements standard, vertical effects mines, in that off-route emplacement permits mining of locations that could not otherwise be effectively mined. Although, basically similar to the M24 mine, it differs in that no initiating device need be contacted by the target to function the mine.

Description:

The mine M66 is a system capable of delivery by parachute. It can be carried as a backpack and emplaced by one man. The mine has six basic component assemblies as follows:

Fuze, Mine, Igniting Type, M619. This fuze is an electronic detector/discriminator consisting of five components. The Source Assembly is a tripod mounted infra red beam generator. The Receiver Assembly is a tripod mounted infrared beam receiver. Stabilizing stakes are provided for both the Source and Receiver Assemblies. The geophone is a seismic device emplaced in the ground to sense the approach of tanks. The Data Processor, which receives inputs from the Receiver and the geophone, can analyze these and discriminates between tanks and personnel and/or animals. If the proper signal is received, the Data Processor will fire the rocket at the target. The Output Cable Assembly transmits the firing command to the rocket.

Rocket, HE, 3.5-inch Antitank, M28A2. This rocket has been modified by the addition of the folding fin assembly and by splicing the two leads in the firing cable and spool assembly to leads connected to the rocket motor squib.

Launcher, Rocket, M143. The launcher is a 24-inch-long plastic tube housing the rocket.

Elevation and Azimuth Sighting Assembly. The sighting and aiming equipment consists of a tube containing a peepsight and crosshairs, and a pair of self centering legs for positioning of the launcher tube.

Bipod Assembly. This accessory provides an adjustable base for the launcher. It consists of a two-pronged base, a short vertical rod with a knurled nut which provides adjustment in elevation, and a yoke which grips the launcher tube near one end. Either forward or aft end may be chosen, depending on type of aiming correction desired. The auxiliary equipment consists of two elongated sand bags, a protective end cover for the launcher, and a thumb screw wrench. The required batteries are issued separately.

Functioning:

Mine system M66 operates on the principle of remote detection and automatic functioning. The geophone detects an approaching vehicle through ground vibration and signals the data processor that a target is enroute. When the target vehicle breaks the infared (IR) beam generated by the source assembly, the receiver signals the data processor. The processor releases electrical energy to fire the rocket only under the conditions of a broken IR beam and a proper seismic signal. This system is inhibited against personnel and animals by a filter in the data processor. Small vehicles do not normally function the system. However, the influence of small vehicles on system functioning increases in some areas depending upon closeness to geophone, speed of vehicle and terrain at the emplacement site.

Tabulated Data:

Model number M66
Type ..... Off-route, AT
Drawings:
  Assembly..... 9245817
Weight:
  Total ..... 40 lb
  Rocket only ..... 9 lb
Dimensions:
  Rocket:
    Length ..... 23.55 in.
    Max diam..... 3.5 in.
Material:
  Rocket:
    Body Steel
    Warhead..... Copper/Steel
  Rocket launcher ..... Plastic
  IR Source ..... Aluminum
  IR Receiver ..... Aluminum
  Data Processor..... Aluminum
  Geophone ..... Plastic/Steel
Fuze:
  System M619
  Type ..... Electronic
  Rocket..... M404A2
  Type Mech-BD
Battery Types (not included):
  2 required for Data
    Processing..... BA-3202/U
  1 required for Data
    Processing..... BA-1114/U
  1 required for IR Source BA-1114/U
Temperature Limits:
  Firing -lower..... -40°F
    -upper - ..... +125°F
Shipping and Storage Data:
  Packing ..... 1 mine M66 w/fuze M619/barrier bag/wirebound box
  Weight..... 70 lb
  Dimensions ..... 32-3/4 x 22-7/8 x12-5/8 in.
  Cube ..... 5.4 cu ft
  Hazard class/division and
    storage compatibility
    group 1.1E
  UNO serial number..... 0181
  UNO Proper shipping
    name ..... Rockets
  DOT shipping class ..... Class A Explosive
  DOT marking..... ROCKET AMMUNITION W/EXPLOSIVE PROJECTILES
DODAC 1345-K183
Painting ..... Olive Drab
Marking ..... Yellow

Explosive Data:

Item	Type	Weight AV	Weight Metric
M28A2 Rocket Motor -			
M2 Elec Sq	fish pdr	1 gr	65 mg
Igniter	blk pdr	54 gr	3.5 gm
Propellant	M7	0.35 lb	159 gm
M404A2 Rocket Fuze-			
	PA #100	1.62 gr	105 mg
M41 Det	Lead Az	3.86 gr	250 mg
	Tetryl	1.67 gr	108 mg
Booster	Tetryl	75 gr	4.86 gm
M28A2 Rocket Warhead -			
Shaped Chg	Comp B	1.88 lb	853 gm

Reference:

TM 9-1345-203-12&P

MINE, ANTITANK: HE, M75

MINE, ANTITANK: HE, M75

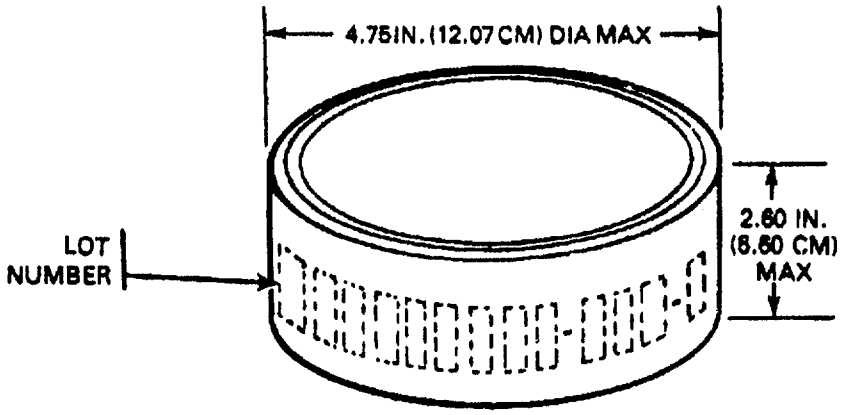

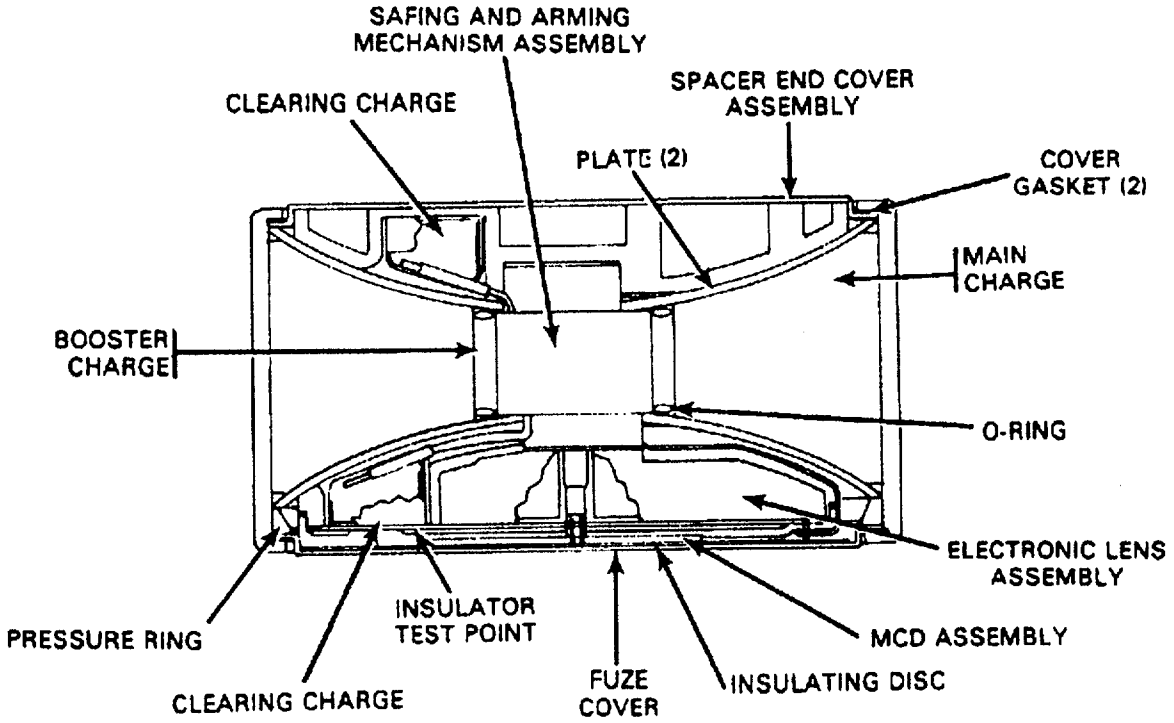

Type Classification:

STD-LCC-A (LET 4-11-80, ARDC).

Use:

The ground burst antitank mine M75 can be emplaced only by the ground vehicle mine dispenser M128. The mine may be used in mixed minefields or by itself against heavy tanks and other types of heavy tracked and wheeled vehicles.

Description:

The mine is green, cylindrical in shape, and fabricated of thick-wall steel tubing. It has an internal Safing and Arming (S&A) device, an electronic assembly, and a power supply. Some of the M75 mines have an antidisturbance switch within the mine, as indicated by the last digit in the lot number. A lot number ending with a "-2" indicates that the mine has an antidisturbance switch; a lot number ending with a "-1" indicates no switch. The mine is set for a specific (normal) self-destruct time by the manufacturer; however, during operations it can be set for a long self-destruct time, depending on the mission requirement. The mines are shipped and stored in a sealed, desiccated container. The container holds eight sleeves, each containing five mines (one mine with an antidisturbance switch and four mines with no antidisturbance switch), for a total of 40 mines per container. The containers are palletized, with six containers per pallet.

Functioning:

Partial arming results from the angular velocity obtained as the mine travels through the launcher of the dispenser. A magnetic impulse provided by two transmitter coils located in the launcher muzzle initiates a low-order detonating primer, which activates two reserve batteries. The batteries provide the electrical power to complete the arming cycle after the mine comes to rest on the ground. The mine is completely armed in 40 to 60 seconds after launch and is then ready to detect a target.

The mine will function in response to any of the following conditions: (1) vehicle passing over the mine, (2) physical disturbance of the mine, (3) expiration of self-destruct time, or (4) power rundown.

Tabulated Data:

Mine, Antitank: HE, M75:

Painting	Green
Marking	Black
Height (max)	2.60 in. (6.60 cm)
Diameter (max)	4.75 in. (12.07 cm)
Weight	4.00 lb (1.81 kg)
Material	Steel tubing

Operational Temperature Limits:

Minimum	-40°F (-40°C)
Maximum	+150°F (+66°C)

Explosive Weight per Mine:

RDX and Estane (95/5)	1.26 lb (0.57 kg)
PBXN-5	0.05 oz (14.27 g)

Self-Destruct Times After Launch:

Normal	5 days
Long	15 days

Safety Distances:

Vertical	1,300 ft (396 m)
Horizontal	2,086 ft (636 m)
DODAC	1345-K184
UNO serial number	0137
UNO proper shipping name	Mines
Packing arrangement	5 mines per sleeve (1 with an anti-disturbance and 4 with no anti-disturbance switch), 8 sleeves per container, 6 containers per pallet
NSN	1345-01-078-4104

Shipping and Storage Container - EMPTY:

Length	27.30 in. (69.30 cm)
Width	14.10 in. (35.81 cm)
Height	15.20 in. (38.61 cm)
Weight	55.0 lb (25.0 kg)
Cube	3.40 cu ft (0.10 cu m)
NSN	8140-01-089-2763
Part number	9313655

Shipping and Storage Container - LOADED:

Weight	232.0 lb (105.2 kg)
Storage compatibility group	D
Quantity-distance class for depot storage	1.1
Quantity-distance class for field storage	E
DOT shipping class	A
DOT markings	EXPLOSIVE MINE
U.S. Coast Guard classification	VII
Shelf life	20 yr

Storage Temperature Limits:

Minimum	-60°F (-51°C)
Maximum	+155°F (+63°C)

Sleeve (empty):
- Color ..... Green
- Length..... 24.48 in. (62.18 cm)
- Width ..... 5.63 in. (14.30 cm)
- Height..... 3.50 in. (8.89 cm)
- Weight..... 2.12 lb (0.96 kg)

Pallet (loaded with full containers):
- Length..... 55.50 in. (140.97 cm)
- Width ..... 43.00 in. (109.22 cm)
- Height..... 23.13 (58.75 cm)
- Weight (approximate, including dunnage) .....1573 lb (714 kg)
- Cube ..... 31.93 cu ft (0.09 cu m)

References:

SC 1340/98-IL
TM 9-1095-205-10
TM 9-1345-210-23&P

Section II. MINES, AERIALLY DISPERSED, ANTITANK/ANTIVEHICLE MINES

MINE DISPERSING SUBSYSTEM, AIRCRAFT: M56

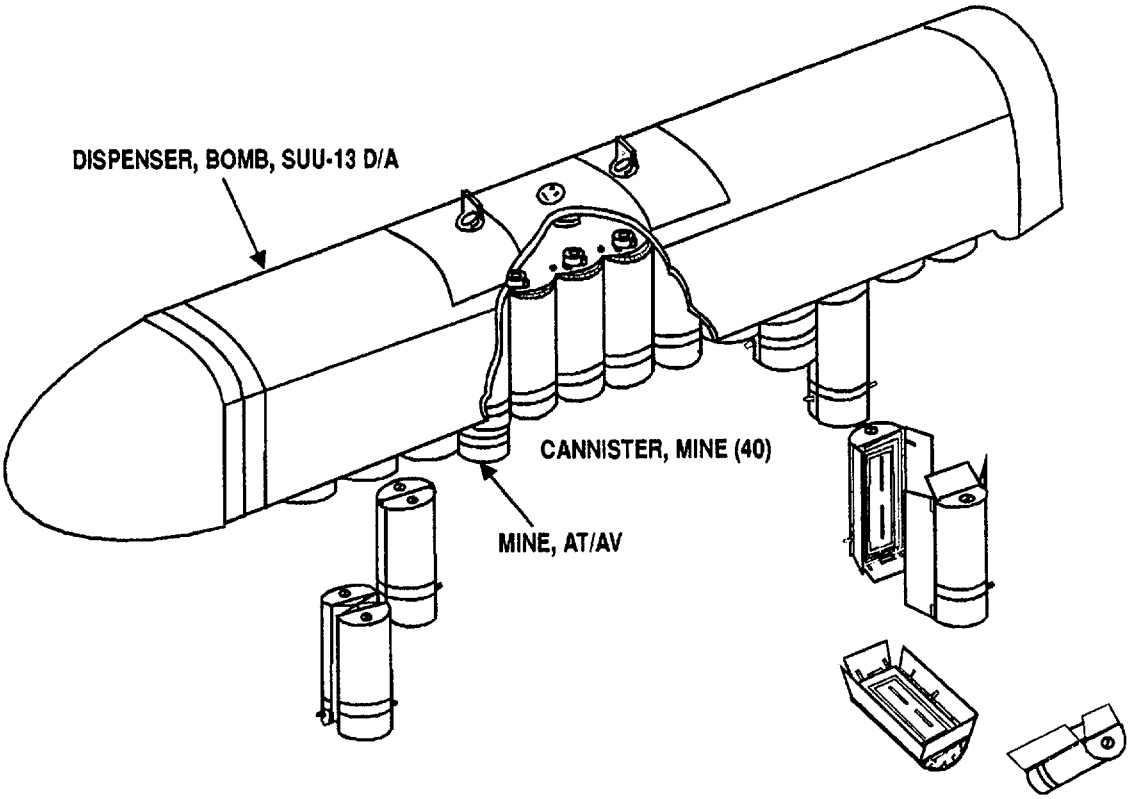

U
AR 101747

Type Classification:
STD A MSR 09746012, dated 20 Nov. 73

Use:
The M56 subsystem provides the means for aerially dispensing antitank/antivehicle (AT/ AV) mines from UH-1H helicopters.

Description:
One complete subsystem consists of a SUU13D/A dispenser loaded with 40 canisters, each canister containing two AT/AV mines and one M198 ejection charge. The mines are in the shape of half of a 4-5/8-inch diameter cylinder and are 10-3/8 inches long. Each AT/AV mine fuze contains an electronic timing module, an electric timing module, an electric detonator, and is powered by a 7.0 volt battery. The firing train following the detonator is comprised of an RDX lead and an RDX booster pellet. Three pounds of Composition H6 constitutes the main charge of each mine.

Functioning:
Two subsystems are mounted per helicopter. A Dispenser Control Panel (DCP) is installed in the helicopter console which enables the pilot, or other crew member, to control the quantity and time-interval of mines fired. An electrical signal from the DCP through the dispenser intervalometer initiates an M198 ejection charge which ejects both mines from the canister. As the mines leave the canister, a bore rider pin in each mine is released which unlocks the fuze mechanical safety device. When the mines are free of the canister, spring loaded fins open which cause the mines to orient so they will land round side down. Upon impact, the mechanical safety device releases, which allows the fuze slider to move into the position which alines the firing train. It also closes a microswitch in the fuze electrical circuit which initiates electrical arming. After ground impact, the mine may tumble and come to rest in any orientation. One to two minutes after impact, the mine is fully armed and ready to be encountered by a target. The fuze in the basic mines will initiate electrically. When a mine contains the antidisturbance (AD) feature

any overrun or agitation of a mine will cause functioning. All versions of the mine contain a self-destruct (SD) feature which has an electrochemical (E-cell) timing unit and a low voltage detector (LVD). When armed mine has not been functioned by over-run or AD, it will SD in 38 to 48 hours. Prior to SD, all mines will function if any attempt is made to remove the battery or to disrupt the battery circuit.

Tabulated Data:

NOTE

Dimensions and weights are approximate.

Mine Dispersing Subsystem ... M56:
- Length ..... 90.38 in.
- Width ..... 14.75 in.
- Height..... 14.44 in.
- Weight, empty, without pallet 117.01b
- Weight (loaded as flown) ... 640 lb
- Weight of pallet ..... 40 lb
- Number of canisters 40
- Distance between suspension lugs..... 14 in.
- Center of gravity (from front end (loaded)) ..... 51.6 in.
- Weight of explosive contents (per dispenser):
  - Weight (H6 explosive) .. 240 lb
  - Weight (RDX explosive) ..... 969 gm
  - Weight (M5 propellant)..... 12.8 gm

Mine Canister:
- Height..... 11.9 in.
- Diameter ..... 4.80 in.
- Weight:
  - Empty ..... 1.8 lb
  - Loaded ..... 13.0 lb

Number of mines per canister 2

Number of mine ejection charges per canister 1

Explosive Weight per Canister:
- Comp H6 ..... 6.0 lb
- RDX ..... 17.4 gm
- M5 propellant ..... 0.32 gm

Mine Ejection Charge M198:
- Weight (loaded) ..... 34 gm
- Explosive weight (M5 propellant) ..... 0.32 gm

Antitank Mine:
- Length ..... 10.38 in.
- Diameter (half-cylindrical) ..... 4.63 in.
- Weight..... 5.6 lb
- Explosive weight (Comp H6)..... 3.0 lb

Shelf Life:
- Shelf life ..... 5 yrs

Temperature Limitations (battery):
- Minimum ..... -25°F (-32°C)
- Maximum ..... +145°F (+62°C)

Shipping and Storage Container CNU-79/E (late model):
- Length ..... 104 in.
- Length (early model)..... 115.6 in.
- Width ..... 31.5 in.
- Height..... 31.5 in.
- Weight:
  - Without dispenser..... 681 lb
  - With dispenser..... 1,368 lb
- Cube ..... 59.7 cu ft
- Hazard class/division and storage compatibility group 1.1D
- DOT shipping class ..... Class A Explosive
- DOT marking..... EXPLOSIVE BOMBS
- Quantity distance for field storage..... E
- U.S. Coast Guard classification ..... X-A
- DODAC 1345-K020
- Drawing number 9287573

References:

SB 700-200
TM 9-1300-200
TM 9-1345-201-12
TM 9-1345-201-30&P

CHAPTER 3

ANTIPERSONNEL MINES

THIS PAGE INTENTIONALLY LEFT BLANK

MINE, ANTIPERSONNEL: M2A4 (M2A4B2)

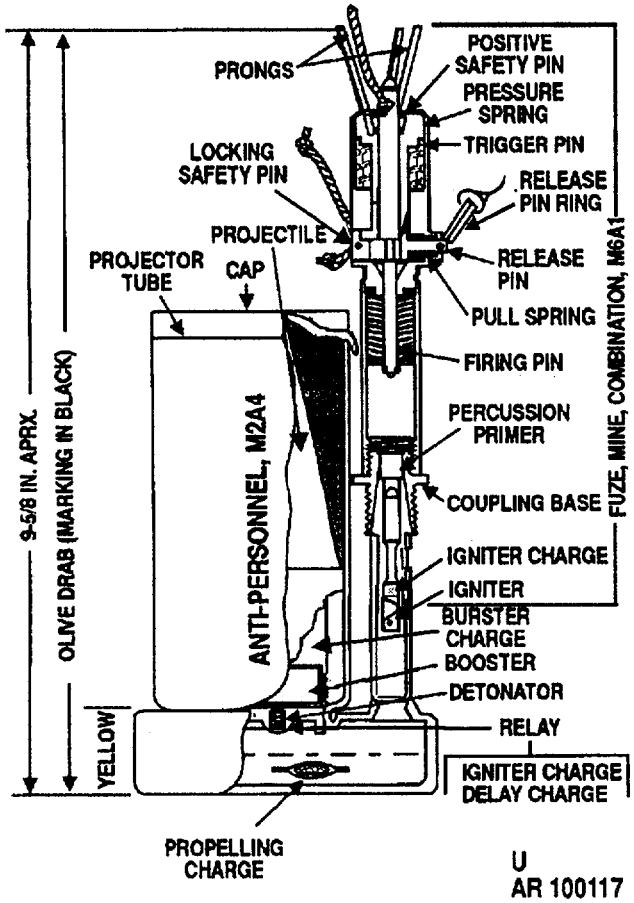

Type Classification:

OBS 11756003

Use:

Antipersonnel mines M2A4 and M2A4B2 are of the bounding, fragmenting-type and are used when an effective above-ground fragmentation pattern is required.

Description:

General. The mine consists of a steel case, with a propelling charge in the base. The combination mine fuze M6A1 is screwed into the tube attached to the base. The projectile, a modified 60mm mortar shell, is contained in the projector tube attached to the base. The propelling charge is ignited by the firing pin-primer-igniter train of the fuze. The mine is shipped with primer and igniter in place. Firing mechanism is shipped separately in fuze box and is screwed into igniter tube.

Difference between models. M2A4 has a stamped steel base. M2A4B2 has a cast iron base which is sealed to the projector tube and to the fuze well pipe with solder, to provide a better moisture-proof seal.

Functioning:

The firing mechanism is functioned either by a 3 to 10 pound pull on a trip wire or by a force of 8 to 10 pounds on one or more of the prongs protruding from the top of the fuze. This pull or push releases the firing pin which strikes the primer and initiates the firing train which ignites the propelling charge. This propelling charge ignites the delay charge and propels the projectile into the air where its delay train detonates the projectile at approximately 2 to 3 meters.

Tabulated Data:

Model number M2A4, M2A4B2
Type ..... AP, bounding
Drawings:
  Assembly:
    M2A4 82-0-99
    M2A4B2 82-0-116
Weight - loaded and fuzed ..... 6.5 lb
Dimensions:
  Height, fuzed ..... 9.625 in.
  Max diameter ..... 4.10 in.
Material Steel
Thread - fuze well 0.563-12UNC-1A
Fuze number (see separate write-up) M6A1
Temperature Limits:
  Firing:
    Lower ..... -40°F
    Upper ..... +125°F
  Storage:
    Lower ..... -60°F
    Upper ..... +160°F
Shipping and Storage Data:
  Packing arrangement ..... 1 mine w/1 - spool stl wire in ctn, 6 ctn (6 mines) w/acc. in wdn box
  Weight ..... 50 lb
  Dimensions ..... 15 x 10-1/4 x 9-1/4 in.
  Cube ..... 0.82 cu ft
  Hazard class/division and storage compatibility group ..... (08) 1.2E
  UNO serial number 0138
  UNO Proper shipping name ..... Mines
  DOT shipping class ..... Class A Explosive
  DOT marking ..... EXPLOSIVE MINES
DODAC 1345-K090
Painting:
  Body ..... Olive Drab
  Base ..... Yellow
Marking ..... Black

Explosive Data:

Item	Type	Weight AV	Weight Metric
M6A1 Fuze:			
Perc primer	#3 Western		
Igniter	blk pdr	10 gr	648 mg
Mine base:			
Propellant	blk pdr	40 gr	259 gm
Projectile:			
Rel-Delay	blk pdr	2.7 gr	175 mg
Igniter	blk pdr	1.16 gr	75 mg
	Lead Az	4.08 gr	265 mg
M17 Det	Tetryl	1.24 gr	80 mg
Booster	Tetryl	248 gr	16.1 gm
Main Chg	TNT	2380 gr	154.2 gm

Reference:
TM 9-1345-203-12&P

MINE, ANTIPERSONNEL: M3

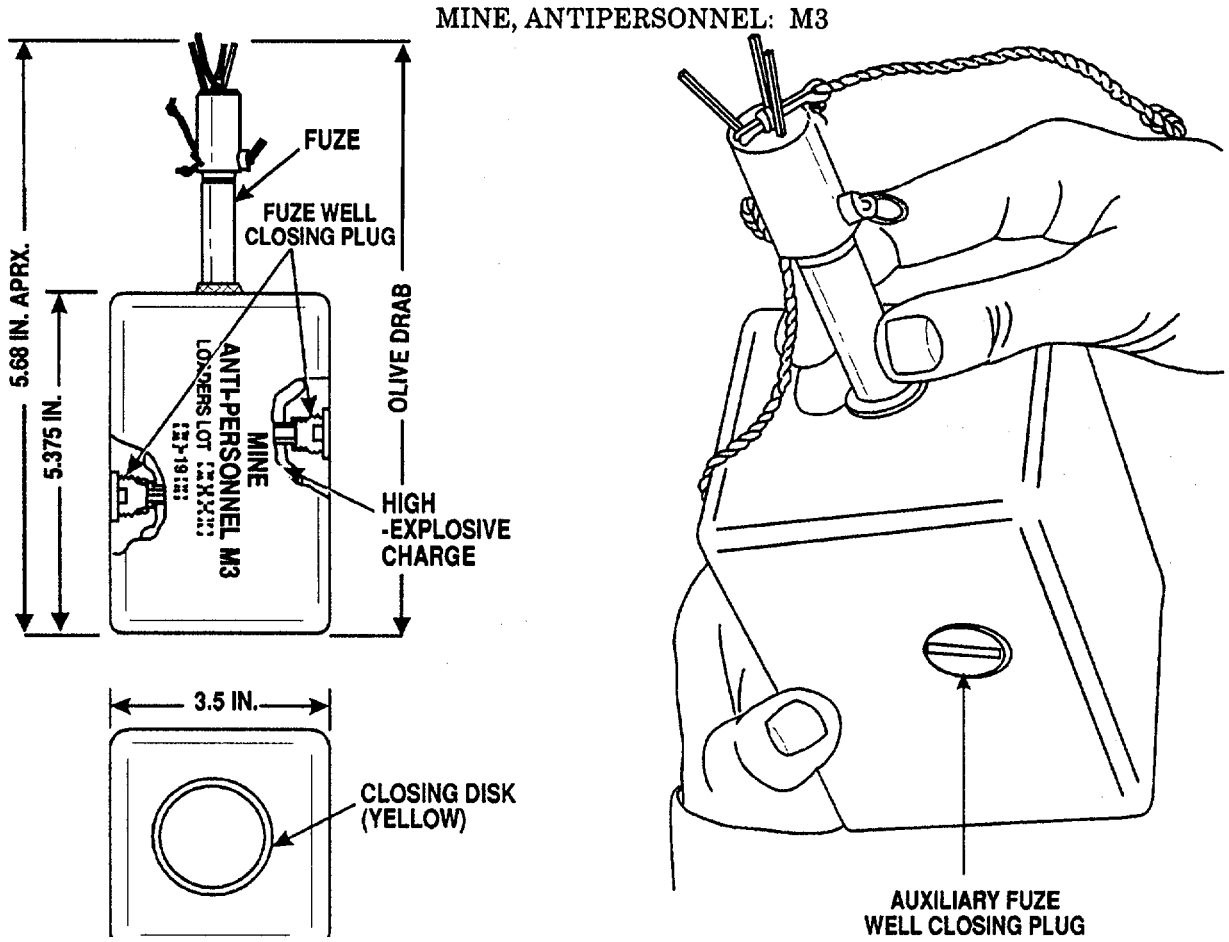

Type Classification:

OBS-11756003

Use:

The M3 mine is used when fragmenting, non-directional, antipersonnel mine is required. The mine is normally placed at the surface, but the effective radius can be increased if it is raised several feet above the ground. If buried, the effective radius is considerably reduced.

Description:

The M3 mine consists of a high explosive charge in a heavy, cast iron body. The body is filled with flake TNT and contains three threaded fuze wells to aid in booby trapping in a variety of fuzing arrangements. As shipped, fuze well holes are closed with slotted plastic plugs.

Functioning:

A pressure of 8 to 20 pounds on any of the prongs, or a pull of 3 to 10 pounds on the release pin ring of the M7A1 fuze will release the firing pin to strike the primer. The primer explodes the nonelectric blasting cap, crimped to the base of the fuze, initiating the TNT bursting charge in the mine body.

Tabulated Data:

Model number M3
Type AP, frag
Drawings:
  Assembly..... 82-0-79
Weight (loaded and fuzed) ..... 10.3 lb
Dimensions:
  Height - fuzes ..... 8.68 in.
  Max dia ..... 3.5 in.
Material ..... Cast iron
Thread:
  Fuze wells 563-12NC-1
Fuze number (see separate
  write-up) M7A1

Temperature Limits:
- Firing:
  - Lower..... -40°F
  - Upper ..... +125°F
- Storage:
  - Lower..... -60°F
  - Upper ..... +160°F

Shipping and Storage Data:
- Packing arrangement ..... 6 mines, 6 fuzes, 6 spools - steel wire in wooden box
- Weight..... 73.2 lb
- Dimensions ..... 17-7/8 x 8-3/4 x 9-1/2 in.
- Cube 0.86 ft
- Hazard class/division and storage compatibility group..... 1.1D
- UNO serial number- 0137
- UNO Proper shipping name ..... Mines
- DOT shipping class ..... Class A Explosive
- DOT marking..... EXPLOSIVE MINES

DODAC 1345-K120
Painting ..... Olive Drab
Marking ..... Black

Explosive Data:

Item	Type	Weight AV	Weight Metric
M7A1 Fuze:			
Primer	No. 3 Western Battery		
Cap	Type 1 Special Blasting Cap		
M3 Mine:			
Main Charge	TNT	6300 gr	407.6 gm

MINE, ANTIPERSONNEL, NONMETALLIC: M14

MINE, ANTIPERSONNEL, NONMETTALLIC: M14

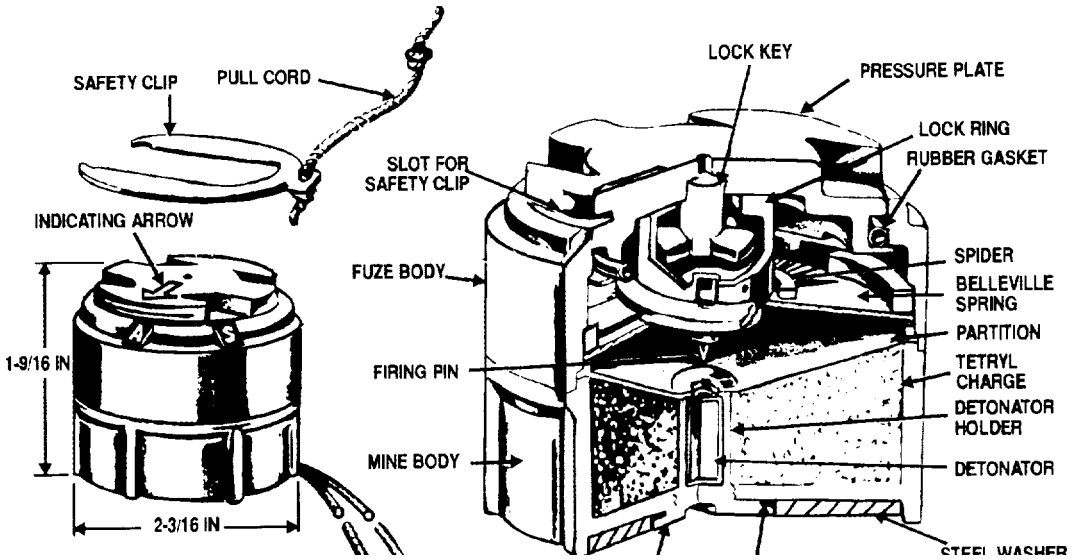

AR100369

Type Classification:

S37904 (LCC-B)

Use:

Antipersonnel mine M14 is a blast-type mine and is used when small, readily concealed mines are required.

Description:

The M14 mine is cylindrical in shape, with six ribs on the outside of the body to provide strength and serve as a means of identification in darkness. The mine is of practically all-plastic construction and is detectable by magnetic mine detectors. M14 mine contains an integral pressure operated fuze. The pressure plate of the mine is designed to transfer the load to a firing pin mounted on a belleville spring. When the load reaches a predetermined value, the belleville spring snaps into reverse, driving the steel firing pin into the detonator. The pressure plate has a yellow indicating arrow and is indented to accommodate the M22 mine and fuze wrench. Letters A and S on fuze body indicate Armed and Safe, respectively. Slots in the pressure plate are for insertion of the steel U-shaped, safety clip. A pull cord is provided for removing the clip when arming the mine. A carrying cord is also provided. For safety, the plastic detonator holder assembly with detonator is packaged separately within the same shipping container. The hole for the detonator holder assembly in the underside of the mine is closed by a plastic plug during shipment. The mine and fuze wrench is also used for removal of the shipping plug and installation of the detonator holder. A steel washer is attached to the bottom of the mine to aid in detection.

Functioning:

With mine set on A, and safety clip removed, a force of 20 to 35 pounds applied to the pressure plate will depress the belleville spring. At some point, the belleville spring snaps into reverse, driving the firing pin into the M46 detonator. This sets off the main charge.

Tabulated Data:

Model number	M14
Type	AP, blast
Drawings:	
Assembly	75-15-55

Weight .... 4.5 oz
Dimensions:
Height ..... . 1-9/16 in.
Max dia ..... 2-3/16 in.
Material .... Plastic

Thread:
Detonator holder 438-20UNC-2A
Fuze .... Integral

Temperature Limits:
Firing:
Lower ..... -40°F
Upper ..... +125°F

Storage:
Lower ..... -60°F
Upper ..... +160°F

Shipping and Storage Data:Item

Packing arrangement ..... 90 mines in carton in set-up box and 9 wrenches, in wooden box

Weight .... 50 lb.

Dimensions ..... 19-3/4 x17-1/4 x 8-3/4 in.
Cube .... 1.73 cu ft
Hazard class/division and storage compatibility group 1.1D
UNO serial number 0137
UNO Proper shipping name ..... Mines
DOT shipping class ..... Class A Explosive
DOT marking ..... EXPLOSIVE MINES
DODAC 1345-K121
Painting ..... Olive Drab
Marking ..... Yellow

Explosive Data:

Item	Type	Weight AV	Weight Metric
	NOL #130	1.62 gr	105 mg
M46 Detonator	Lead Azide	4.31 gr	280 mg
	RDX	2.24 gr	145 mg
Main Charge	Tetryl	437.5 gr	28.35 gm

Reference:

TM 9-1345-203-12&P

☆U.S. GOVERNMENT PRINTING OFFICE: 1997-545-037/60704

MINE, ANTIPERSONNEL: M16 (M16A1, M16A2)

MINE, ANTIPERSONNEL: M16 (M16A1, M16A2)

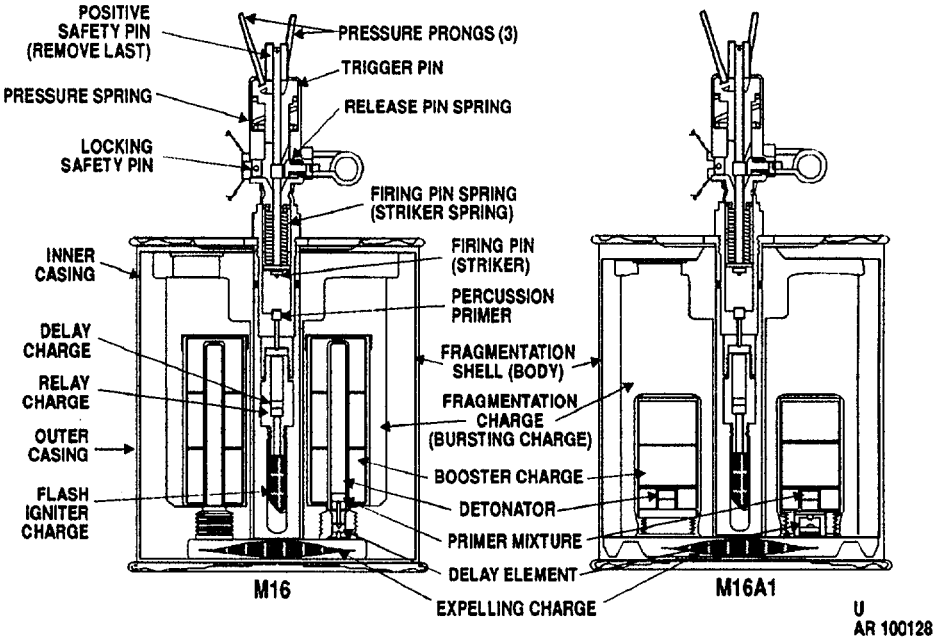

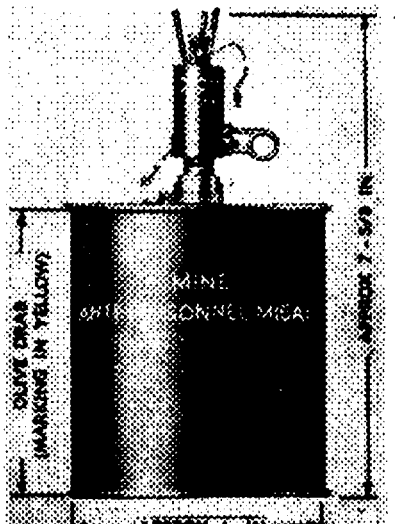

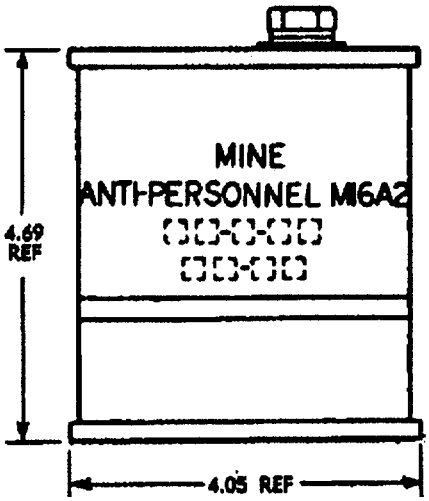

Type Classification:

M16 Conf. 6558
M16A1 S 3686 (LCC-B)
M16A2 S 3686 (LCC-A)

Use:

The M16 series mines are of the bounding, fragmenting type, and are employed primarily in mixed mine fields to protect antitank mines against enemy breeching parties. They can be used by themselves in the preparation of ambushes or in the nuisance mining of areas likely to be occupied by enemy troops.

Description:

General. This mine consists of a combination mine fuze M605, a propelling charge, and a cast iron, fragmenting projectile all contained in a sheet steel case. The fuze screws into the fuze well in the top of the case and extends through the projectile to the bottom of the case where the propelling charge is located. No secondary fuze wells are provided and booby trapping of the M16 series mine will be done only by specially trained personnel.

Difference between models. The principal difference between the M16 and M16A1 models is in the construction of the detonators and the boosters. Mine M16A2 is an advanced version of the series and incorporates only one booster detonator and delay instead of two each. This allows greater room for explosive charge.

Functioning:

WARNING

- **WHEN HANDLING THE M605 FUZE, ALWAYS TAKE CARE TO AVOID PUSHING ON THE CIRCULAR DEPRESSION IN THE BODY OF THE FUZE OPPOSITE THE TRIP WIRE PULLING BOSS. THIS IS THE SLIDER HOLDING THE FIRING PIN AND ANY MOVEMENT (EVEN THE SMALL AMOUNT ALLOWED WITH THE SAFETY COTTER PIN IN PLACE) CAN PLACE THE FIRING PIN CLOSER TO THE POINT OF RELEASE.**

- **IN ARMING THE M605 FUZE, ALWAYS PULL THE POSITIVE SAFETY PIN WITH YOUR FINGERS NOT BY PULLING JUST ON THE STRING. THIS WILL AVOID IMPARTING A SHOCK TO THE FUZE WHICH COULD ACTUATE IT.**

The M16 series firing mechanism is functioned by either a 3 to 15 pound pull on a trip wire or by a force of 8 to 45 pounds on one or more of the prongs protruding from the top of the fuze. This pull or push releases the firing pin which strikes the primer which ignites the fuze delay charge. The delay allows time for persons stepping on the prongs to move from directly above the mine. The fuze delay ignites the relay charge which ignites the fuze igniter charge. The fuze igniter charge ignites the mine propelling charge which projects the shell body upward and at the same time ignites the detonator delay charge. The detonator delay charge burns through and initiates the detonator which explodes boosters which explodes the bursting charge about one meter above the ground. The wrench M25 is furnished with this mine. The box end fits the shipping plug and the open end fits the fuze.

Tabulated Data:

Model numbers M16, M16A1, M16A2
Type ..... AP, bounding, frag

Drawings:
- Assembly:
  - M16 82-0-194
  - M16A1 8796365
  - M16A2 8876013
- Weight (fuzed):
  - M16 ..... 8.25 lb
  - M16A1 ..... 8.25 lb
  - M16A2 ..... 6.25 lb

Dimensions:
- Height (max) ..... 7.82 in.
- Diameter (max) ..... 4.05 in.

Material Steel and cast iron
Thread-primary fuze well..... 0.625-11UNC-1A
Fuze (see separate write-up) M605
Temperature Limits:
- Firing:
  - Lower..... -40°F
  - Upper ..... + 125°F
- Storage:
  - Lower..... -60°F
  - Upper ..... +160°F

Shipping and Storage Data:
- Packing:
  - M16 and M16A1 ..... 4 mines, 4 fuzes, 4 spools wire, 1 wrench, in wooden box
  - M16A2 ..... 4 mines, 4 fuzes, 2 spools wire, 1 wrench barrier bag in wooden box
- Weight..... 44.8 lb
- Dimensions:
  - M16 ..... 15-5/8 x 10-1/8 x 8-1/2 in.
  - M16A1 and M16A2..... 15-5/8 x 9-3/4 x 8-1/2 in.
- Cube:
  - M16 ..... 0.78 cu ft
  - M16A1 and M16A2..... 0.75 cu ft
- Hazard class/division and storage compatibility group ..... (08) 1.2E
- UNO serial number..... 0138
- UNO Proper shipping name ..... Mines
- DOT shipping class ..... Class A Explosive
- DOT marking..... EXPLOSIVE MINES

DODAC 1345-K092
Painting ..... Olive Drab
Marking ..... Yellow

Explosive Data:

Item	Type	Weight AV	Weight Metric
M605 Fuze:			
M42 Primer	#793 Prim	0.34 gr	22 mg
Delay	Comp Tp II	7.03 gr	475 mg
Flsh Ig n	C1 Blk Pdr	10 gr	648 mg
M16, M16A1, M16A2 Mines:			
Expell Chg	Blk pdr	70 gr	4.53 gm
M16 Mine Projectile:			
	Blk Pdr	4.2 gr	280 mg
Delay	Lead Sty	4.6 gr	300 mg
Detonator	Lead Az	10.8 gr	700 mg
Booster	Tetryl	76.2 gr	4.92 gm
Booster	Tetryl	839.2 gr	54.36 gm
Main Charge	TNT	1.15 lb	521 gm
M16A1 Mine Projectile:			
	Blk Pdr	4.2 gr	280 mg
Delay	Lead Sty	4.6 gr	300 mg
	Lead Az	10.8 gr	700 mg
Booster	5Tetry	606 gr	32.8 gm
Main Charge	TNT	1.13 b	513 gm
M16A2 Mine Projectile:			
	Blk Pdr	2.1 gr	140 mg
Delay	Lead Sty	2.3 gr	150 mg
Detonator	Lead Az	5.4 gr	350 mg
Booster	Comp A5	172.4 gr	11.18 gm
Main Charge	TNT	1.3 lb	590 gm

Reference:

TM 9-1345-203-12&P

MINE ANTIPERSONNEL: M18A1

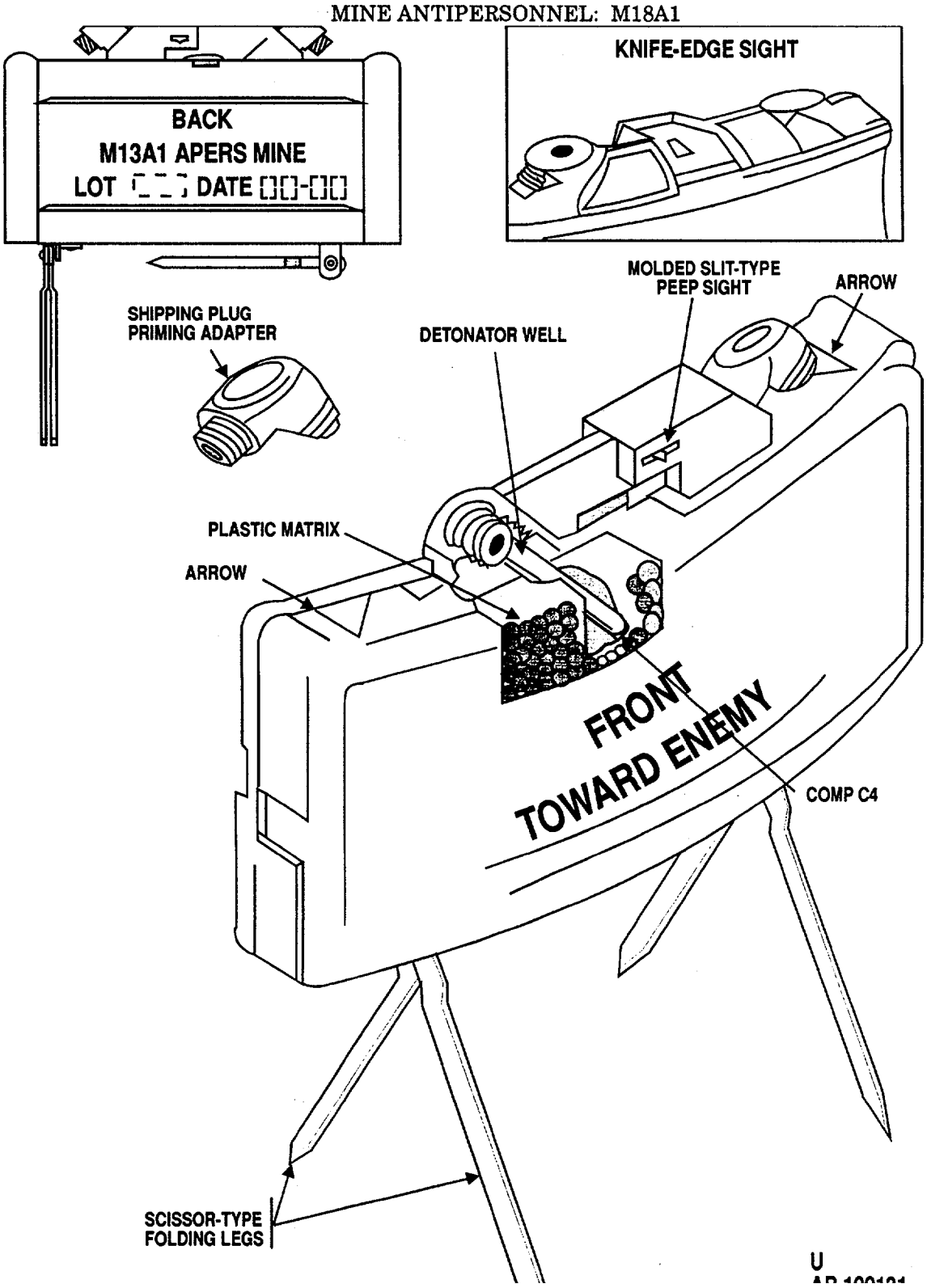

MINE, ANTIPERSONNEL: M18A1

MINE, ANTIPERSONNEL: M18A1

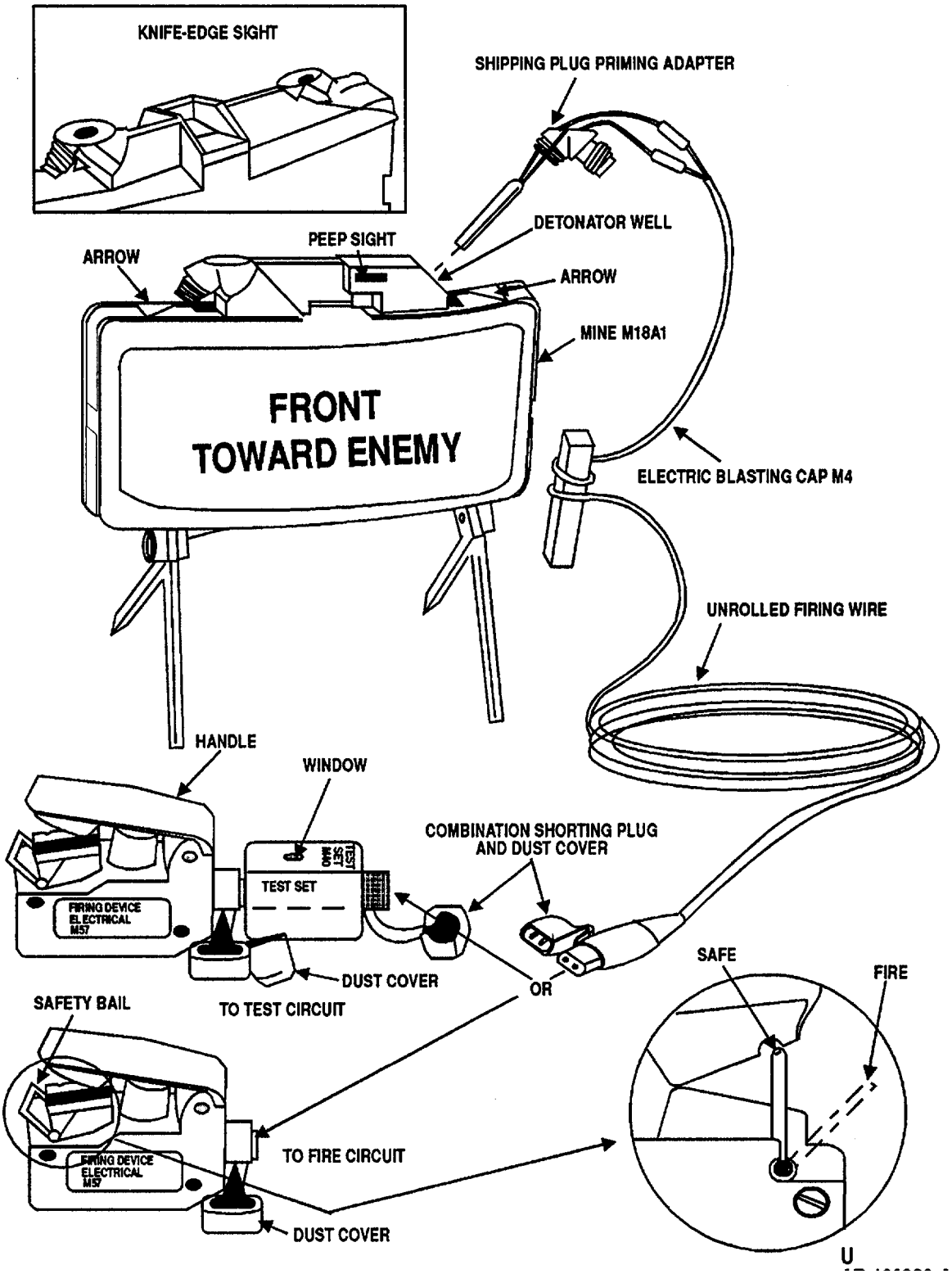

Type Classification:

(M18A1) S 37809 (LCC-A)

Use:

The M18A1 mine is used when a directional, fixed, fragmentation mine is required for the defense of bivouac areas, outposts, and against infiltration tactics. It is also used against thin-skinned vehicles.

Description:

General. Mine M18A1 has a curved, rectangular, olive drab, molded case of fiberglass-filled plastic. The front face is lined with steel spheres embedded in a plastic matrix. The back portion of the case, behind the matrix, contains C4 explosive. The fragmentation face is convex, horizontally, to direct the fragments in a 60 degree arc, and concave, vertically, to control the vertical dispersion of the fragments. A built-in sight and two pairs of scissors-type folding legs allow aiming of the mine. Two detonator wells located in the top of the mine enable the mine to be fired from two locations. The wells are sealed by the plug ends of the shipping plug priming adapters. The adapter is reversed when the mine is to be armed and the slotted end of the adapter is used to hold the blasting cap. The mine is shipped with several special components. The Cap, Blasting, Electric M4 assembly consists of an M6 electric blasting cap and 30 meters of firing wire, terminating in an electrical connector and shorting plug. The firing device is an M57 hand-held pulse generator with an electrical connector and dust cover. The test set M40 is used to visually test circuit continuity. The bandoleer M7 is constructed to carry one complete set of components.

Functioning:

The M18A1 mine main charge may be initiated by electrical or nonelectrical methods. The electrical method is by initiation of the electric blasting cap assembly by use of the M57 pulse generator firing device. The nonelectric method makes use of a pull type firing device operated by an observer, or by trip wires. The firing device initiates a length of detonating cord attached to a nonelectric blasting cap.

Tabulated Data:

Model number M18A1
Type ..... AP, frag
Drawings:
  Assembly..... 88351.66
Weight-less fuze ..... 3.5 lb
Dimensions:
  Height..... 3.25 in.
  Width ..... 8.5 in.
  Thickness..... 1.375 in.
Material ..... Plastic
Thread-detonator wells..... 0.563-12 UNC-1A
Fuze ..... Elec blasting cap assy M4
Activating force ..... 1-squeeze of hand-held M57 activator handle

Temperature Limits:
  Firing:
    Lower..... -40°F
    Upper ..... +125°F
  Storage:
    Lower..... -60°F
    Upper ..... +160°F
Shipping and Storage Data:
  Packing ..... 1 mine, 1 cap blasting, 1 firing device in band, 6-band, 1 test set elec, 1 ID tag in wdn box (6 mines)
  Weight..... 53 lb
  Dimensions ..... 15-3/4 x 11-1/8 x 18-1/8 in.
  Cube ..... 1.84 cu ft
  Hazard class/division and storage compatibility group 1.1D
  UNO serial number..... 0137
  UNO Proper shipping name ..... Mines
  DOT shipping class ..... Class A Explosive
  DOT marking..... EXPLOSIVE MINES
DODAC 1345-K143
Painting ..... Olive Drab
Marking ..... Black

Explosive Data:

Item	Type	Weight AV	Weight Metric
M18A1 Mine:			
M4 Cap Assy			
M6 Elec Cap	RDX	13.5 gr	875 mg
Mine:			
Main Chg	Comp 4	1.6 lb	682 gm

Reference:

TM 9-1345-203-12&P

MINE, ANTIPERSONNEL: M26

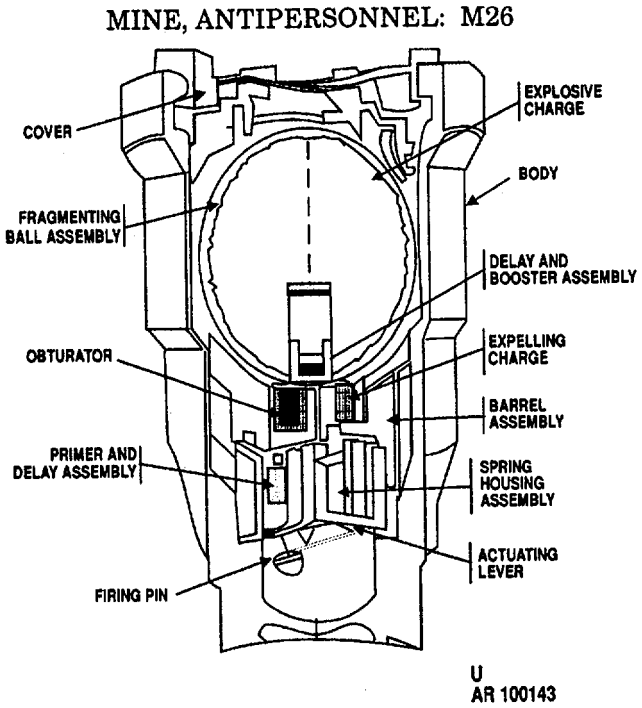

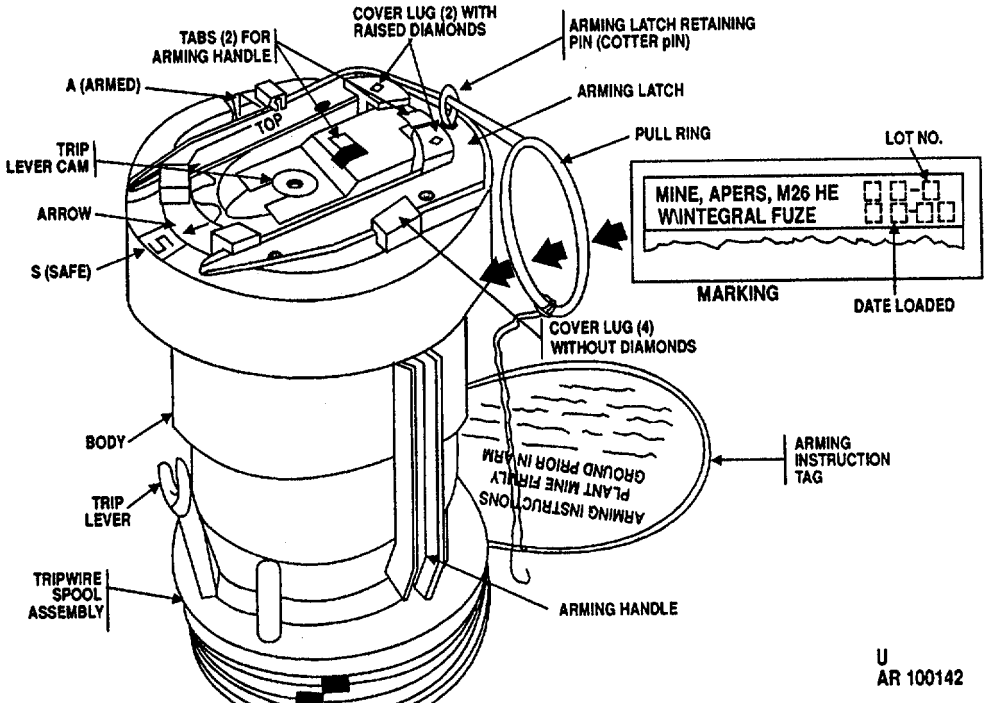

Type Classification:

OBS 03866012

Use:

The M26 mine is of the bounding, fragmenting type and is used when an effective above ground fragmentation pattern is required.

Description:

The M26 mine is a small, integrally fuzed, bounding type, antipersonnel mine. The body is of die-cast aluminum and is relatively cylindrical in shape, but tapering toward the bottom where there are four external vertical ribs. On the rim, at the top of the body, are two recesses, with a raised S for Safe in one, and a raised A for Armed in the other. The cover is built with six lugs and the prongs of the arming latch fit between these to prevent rotation. The middle prong of the arming latch fits under the trip lever cam. The arming latch is saftied to the body by an arming latch retaining pin. The cotter pin is locked, after insertion, by spreading the ends which project below the rim of the mine body. The removable trip wire spool assembly consists of four 20 foot trip wires, a trip lever, and an arming handle, all assembled on a plastic spool. The fragmenting ball assembly consists of a steel ball containing an explosive charge, and a delay and booster assembly recessed within the charge. At the base of the ball a steel obturator or piston houses the propelling charge. The barrel is used to hold the fragmenting ball assembly in an upright position. when the mine is set on Safe (S), the flash hole in the barrel is out of alignment with the primer and delay assembly. When set on Armed (A) the flash hole is alined with the primer and delay assembly and permits ignition of the propellant. The spring housing assembly includes the firing pin assembly and actuating lever, and a primer and delay assembly.

Attached to, but easily removable from the mine are the following accessories: Arming Handle, Arming Instruction Tag, Trip Lever, and Spool Assembly. Four 20 foot trip wires, two colored olive drab and two tan, are stored on the spool.

Functioning:

Setting the mine to the armed (A) position rotates the barrel assembly so that the primer and delay assembly are in direct alinement with the flash hole in the barrel assembly and with the expelling charge directly above. A force of 14 to 28 pounds on the mine top, or a pull on the top level will activate the mine. Upon actuation, the spring loaded firing pin is released and fires the primer and delay assembly which ignites the expelling charge. This ejects the fragmenting ball assembly to a height of approximately 2 meters. The delay, ignited by the expelling charge, then initiates the booster which detonates the main charge, shattering the fragmenting ball. The mine may be rigged for tripwire activation. Remove the trip lever from storage in the spool assembly and insert in the threaded well in the cam, top, center. Attach one or more of the tripwires, as required.

Tabulated Data:

Model number	M26
Type	APERS
Drawings:	
Assembly	8840286
Weight	2.2 lb
Dimensions:	
Height	5.7 in.
Max diameter	3.1 in.
Material	Aluminum/steel
Fuze	(integral)
Temperature Limits:	
Firing:	
Lower	-40°F
Upper	+125°F
Storage:	
Lower	-60°F
Upper	+160°F
Shipping and Storage Data:	
Packing	3 mines per fiber container, 6 containers (18 mines) per wooden box
Weight	601b
Dimensions	21-1/4 x 12-1/2 x 9-3/4 in.
Cube	1.5 cu ft
Hazard class/division and storage compatibility group	(08) 1.2E
DOT shipping class	Class A Explosive
DOT marking	EXPLOSIVE MINES
DODAC	1345-K146
UNO serial number	0321
UNO Proper shipping name	Cartridges for weapons
Painting	Olive Drab
Marking	Yellow

Explosive Data:

Item	Type	Weight AV	Weight Metric
Integral Mine Fuze:			
M42 Primer	#793 Mix	0.34 gr	22 mg
Delay chg	BA204	2.84 gr	184 mg
	Se	0.63 gr	41 mg
Igniter	Eimite	0.63 gr	41 mg
Mine:			
Propellant	M9-TpI	10 gr	648 mg
Delay Chg	Igniter*	2.93 gr	190 mg
	Lead Az	3.47 gr	225 mg
	Tetryl	2.3 gr	150 mg
Booster	Tetryl	23 gr	1.5 gm
Main Chg	Comp B	0.375 lb	170 gm
*Barium Chromate		2.61 gr	169 mg
Beron Amorphous	Pdr	0.29 gr	19 mg
Vinyl Plastic	Resin	0.03 gr	2 mg

Reference:
TM 9-1345-203-12&P

MINE, ANTIPERSONNEL: HE, M74

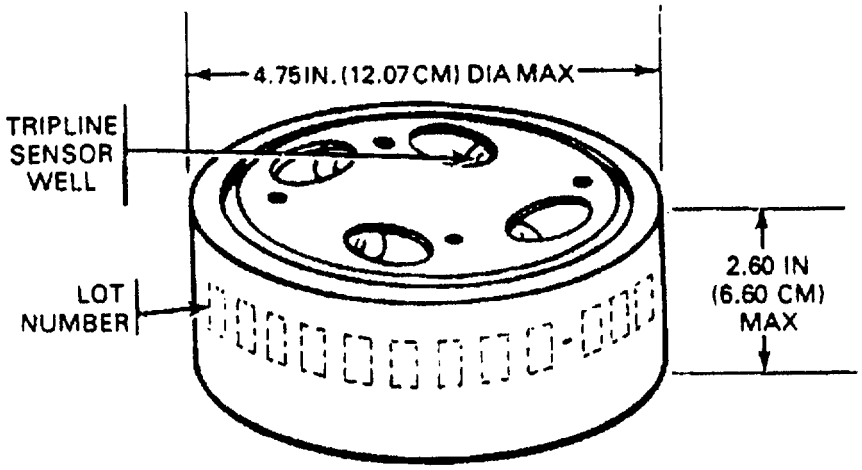

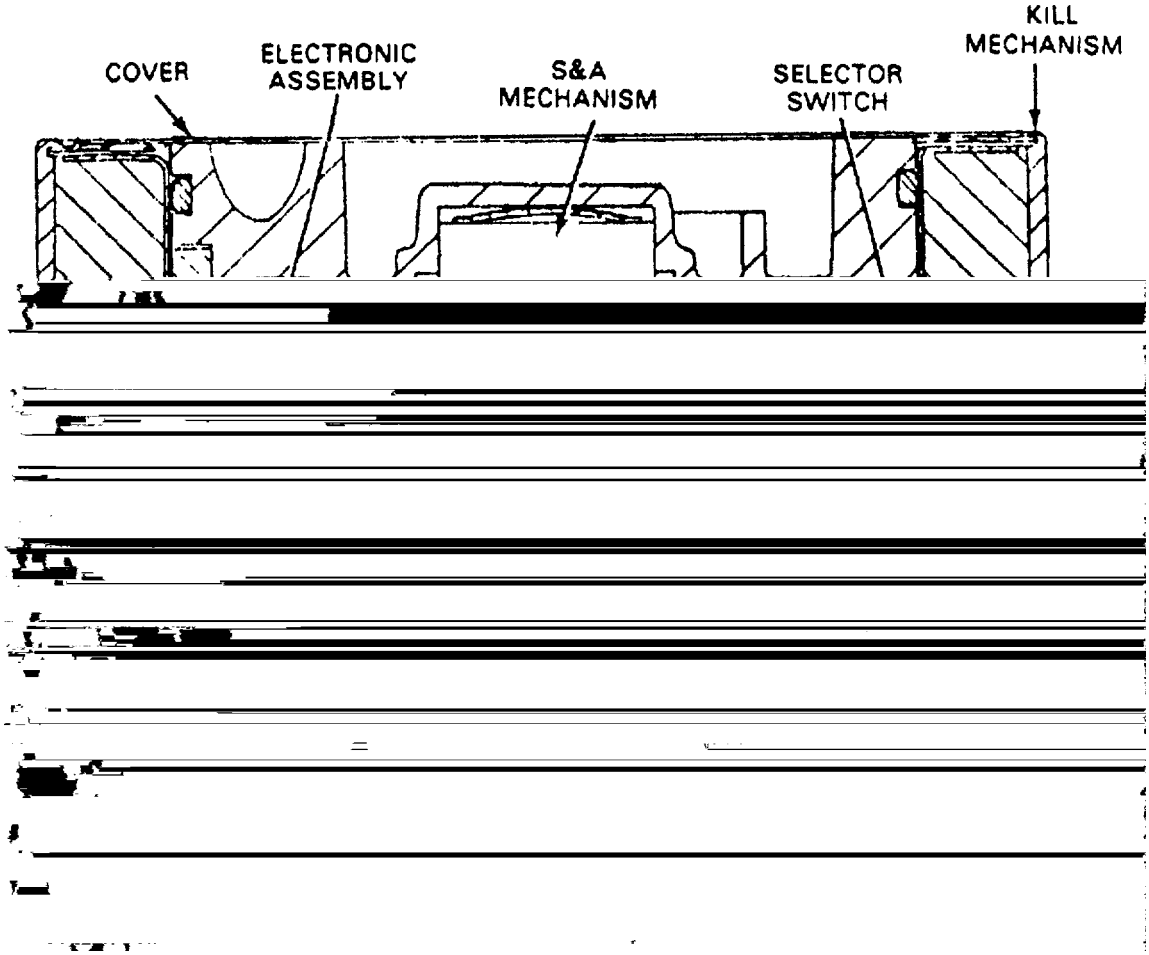

Type Classification:

STD-LCC-A (LET 4-11-80, ARDC).

Use:

The ground burst antipersonnel mine M74 can be emplaced only by the ground vehicle mine dispenser M128. This mine may be used in mixed minefields to protect antitank mines against enemy breaching parties.

Description:

The mine is green, cylindrical in shape, and fabricated of thick-wall steel tubing which is internally scored for maintaining uniform fragment size. It has an internal Safing and Arming (S&A) device, an electronic assembly, a power supply, and four tripline assemblies at each end (eight total). The mine is set for a specific (normal) self-destruct time by the manufacturer; however, during operations it can be set for a long self-destruct time, depending on the mission requirement. The mines are shipped and stored in a sealed desiccated container. The container holds eight sleeves, each containing five mines for a total of 40 mines per container. The containers are palletized, with six containers per pallet.

Functioning:

Partial arming results from the angular velocity obtained as the mine travels through the launcher of the dispenser. A magnetic impulse provided by two transmitter coils located in the launcher muzzle initiates a low-order detonating primer, which activates the electrical power for mine functioning. After the mine comes to rest on the ground, a signal from the electronic assembly initiates a pressure cartridge, which causes ejection of the four tripline assemblies. The triplines uncoil from their bobbins until the tripline assemblies impact the ground. The mine is completely armed in 40 to 60 seconds after launch and is ready to detect a target.

The mine will function in response to any of the following conditions: (1) movement of a tripline, (2) physical disturbance of the mine, (3) expiration of the self-destruct time, or (4) power rundown.

Tabulated Data:

Mine, Antipersonnel: HE, M74:
- Painting ---------- Green
- Marking ---------- Black
- Height (max) ---------- 2.60 in. (6.60 cm)
- Diameter (max) ---------- 4.75 in. (12.07 cm)
- Weight ---------- 3.10 lb (1.41 kg)
- Material ---------- Steel tubing

Operational Temperature Limits:
- Minimum ---------- -40°F (-40°C)
- Maximum ---------- +150°F (+66°C)

Explosive Weight per Mine:
- Composition B4 ---------- 0.90 lb (0.41 kg)
- Composition A5 ---------- 0.22 oz (6.35 g)
- PBXN-5 ---------- 0.17 oz (4.70 g)

Self-Destruct Times After Launch:
- Normal ---------- 5 days
- Long ---------- 15 days

Tripline length ---------- 40.0 ft (12.2 m)
Safe horizontal distance -------- 870 ft (265 m)
DODAC ---------- 1345-K151
UNO serial number ---------- 0137
UNO proper shipping name ---- Mines
Packing arrangement ---------- 5 mines per sleeve, 8 sleeves per container, 6 containers per pallet
NSN ---------- 1345-01-076-3497

Shipping and Storage Container - EMPTY:
- Length ---------- 27.30 in. (69.30 cm)
- Width ---------- 14.10 in. (35.81 cm)
- Height ---------- 15.20 in. (38.61 cm)
- Weight ---------- 55.0 lb (25.0 kg)
- Cube ---------- 3.40 cu ft (0.10 cu m)
- NSN ---------- 8140-01-089-2763
- Part number ---------- 9313655

Shipping and Storage Container - LOADED:
- Weight ---------- 196.0 lb (88.9 kg)
- Storage compatibility group ---------- D
- Quantity-distance class for depot storage ---------- 1.1
- Quantity-distance class for field storage ---------- E
- DOT shipping class ---------- A
- DOT markings ---------- EXPLOSIVE MINE
- U.S. Coast Guard classification ---------- VII
- Shelf life ---------- 20 yr

Storage Temperature Limits:
- Minimum ---------- -60°F (-51°C)
- Maximum ---------- +155°F (+63°C)

Sleeve (Empty):
- Color ---------- Green
- Length ---------- 24.48 in. (62.18 cm)
- Width ---------- 5.63 in. (14.30 cm)
- Height ---------- 3.50 in. (8.89 cm)
- Weight ---------- 2.12 lb (0.96 kg)

Pallet (Loaded with Full Containers):
- Length ---------- 55.50 in. (140.97 cm)
- Width ---------- 43.00 in. (109.22 cm)
- Height ---------- 23.13 in. (58.75 cm)
- Weight (approximate, including dunnage) --------- 1375 lb (616 kg)
- Cube ---------- 31.93 cu ft (0.90 cu m)

References:

SB 1340/98-IL
TM 9-1095-205-10
TM 9-1345-210-23&P

THIS PAGE INTENTIONALLY LEFT BLANK

MINE, ANTIPERSONNEL: M86 PURSUIT DETERRENT MUNITION (PDM)

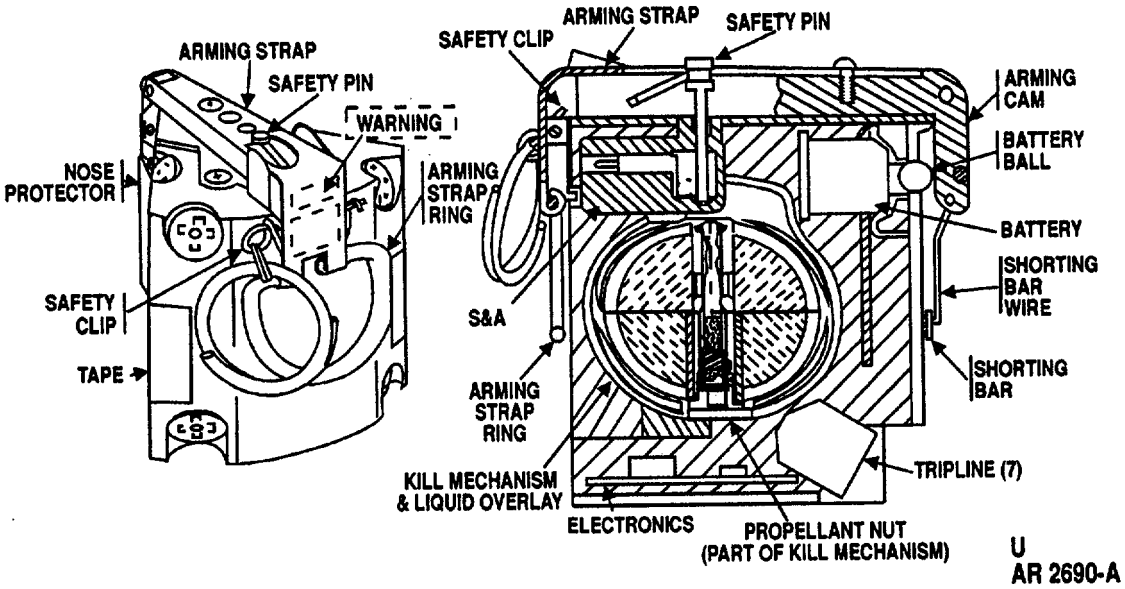

Type Classification:

STD

Use:

The M86 Antipersonnel Mine is to be hand emplaced or deployed as a deterrent munition by special forces or selected personnel only on operations where they may be pursued by an enemy.

Description:

The M86 Mine is similar in configuration and possesses functioning characteristics of the ADAM Mine presently loaded in the 155mm projectile, M731 (and M692). The mine is wedge shaped, and contains a safety clip, arming strap assembly, internal safing and arming device, seven tripline sensors, a reserve battery, electronic circuitry containing an IC chip, and a kill mechanism surrounded by an overlay containing a liquid propellant, and encapsulated in molded plastic form.

Functioning:

WARNING

• ONCE ARMING STRAP IS LIFTED, DEPLOYMENT IS MANDATORY. DO NOT ATTEMPT TO RE-SAFE.

• SAFE SEPARATION TIME IS 25 SECONDS AFTER STRAP IS LIFTED. LEAVE AREA IMMEDIATELY AFTER EMPLOYMENT AND DO NOT RETURN TO AREA.

• THE M86 MINE HAS A SELFDESTRUCT FEATURE WHICH MAKES IT EXPENDABLE: THEREFORE, DO NOT RETURN TO AREA.

• DO NOT DEPLOY MINE BELOW -25°F. IF MINE IS DEPLOYED BELOW -25°F, MINE MAY SELF-DESTRUCT EITHER IN A 5-MINUTE TIME FRAME, OR LATER THAN THE PROGRAMMED SELF-DESTRUCT TIME FRAME.

• DO NOT REMOVE NOSE PROTECTOR OR NOSE PROTECTOR TAPE. REMOVAL OF TAPE MAY DAMAGE THE ELECTROMAGNETIC RADIATION (EMR) AND ELECTROSTATIC DISCHARGE (ESD) PROTECTIVE PAINTS.

• IF ONE OR MORE TRIPLINES ARE FOUND DEPLOYED PRIOR TO USE, DO NOT ARM OR ATTEMPT TO USE THE PDM. TURN IN MINE FOR DISPOSAL.

The M86 Antipersonnel Mine is manually armed by removing the safety clip and then the arming strap assembly. A camming action breaks the shorting bar and forces the battery ball against the battery breaking the glass ampule containing an electrolyte which activates the reserve battery and provides power. The shorting bar hook, attached to the cam, shears the shorting bar (a safety device across the detonator). After a 60-second (nominal) electronic time delay, a piston actuator in the Safe and Arm mechanism is electrically fired, moving a slider to align the detonator with an explosive lead in the slider. At the same time, seven sensor triplines are released. Approximate three or four triplines will deploy up to 20 feet from the mine, depending upon the at-rest position of the mine. The remaining triplines may be hindered due to their proximity to the resting surface. After an additional 10-second electronic time delay, allowing the munition to return to equilibrium, the mine is fully armed electronically. Disturbance of a tripline, or the mine itself, now triggers a switch which completes an electronic firing circuit. The S&A electric detonator initiates the S&A firing train which initiates a detonating cord which then initiates a thin layer of liquid propellant, which by gravity rests under the kill mechanism, shattering the plastic mine body and propelling the kill mechanism upwards from 6 inches to 8 feet above the ground where it detonates. The kill mechanism is a spheroid internally embossed and loaded with 21 grams of Comp A5 and when detonated, propels fragments in a high velocity spherical pattern.

If the mine is not activated by tripline or disturbance mode, a factory preset self-destruct feature initiates the mine in 4 hours plus 0-20 percent.

Tabulated Data:

Model M86
Type ..... APERS, frag
Dwg Assy..... 9366700
Weight ..... 1.2 lb, approx
Dimensions:
  Height..... 3.203 in.
  Radius (max)..... 2.924 in.
  Thickness..... 72°wedge
Material ..... Plastic and steel
Temperature Limits:
  Operational:
    Lower Limit..... -32C (-250F)
    Upper Limit..... +520C (+1250F)
Storage:
    Lower Limit..... -46C (-50°F)
    Upper Limit..... +710C (+1600F)
Shipping and Storage Data:
  Packing ..... 2 mines each in a lastic bag, per bandoleer; each bandoleer in an outer barrier bag, 6 bandoleers in a metal box (PA19), two metal boxes in wooden wirebound box, total mines 24 per box
  Weight..... 56 lb
  Dimensions ..... 14-5/8 x 12-13/16 x 11-15/16 in.
  Cube ..... 1.3 cu ft
Palletization:
  Pallet size..... 40 in. x 48 in. (101.6 cm x 121.92 cm)
  Pallet weight..... 80 lb (36.29 kg)
  Dunnage weight..... 11 lb (4.95 kg)
  Loaded weight..... 2779 lb (w48 wd boxes) (1260 kg) approx
  Cube ..... . 69.3 cu ft
  ..... (2.08 cu m)
Hazard class/division ..... (08) 1.2
Storage compatibility group D
DOT shipping class..... A
DOT designation..... EXPLOSIVE MINES
USCG classification ..... X-A
UNO serial number 0138
UNO Proper shipping name Mines
NSN 1345-01-243-5089
DODAC 1345-K152
Painting ..... Latex Forest Green (#609-66, Color F135, Fuller O'Brien)
Markings..... Black (#37038)
Drawing number..... 8865546
Combination of adopted items Dwg 9366711

Explosive Data:

Item	Type	Weight AV	Weight Metric
M86 Mine:			
Main Charge	Comp A5	21 gr	

References:

TM 9-1345-203-12&P
TM 9-1345-203-34&P

CHAPTER 4

CHEMICAL AGENT MINES

THIS PAGE INTENTIONALLY LEFT BLANK

MINE, CHEMICAL AGENT, VX: M23

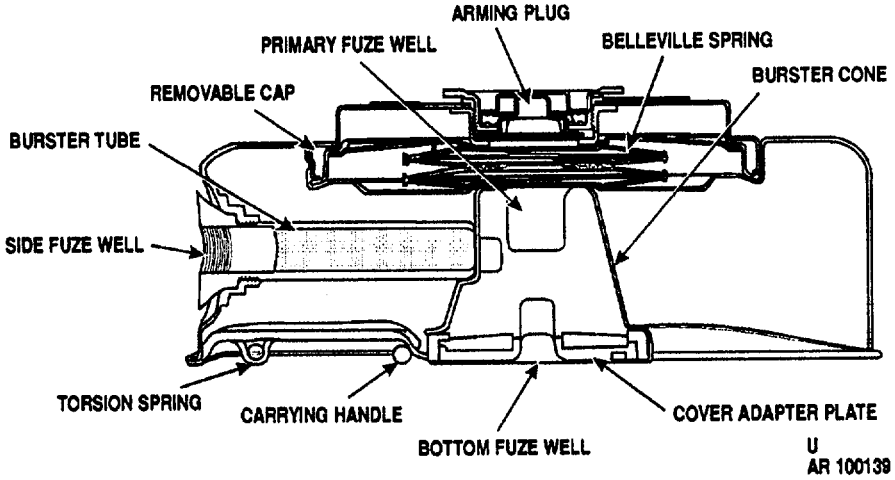

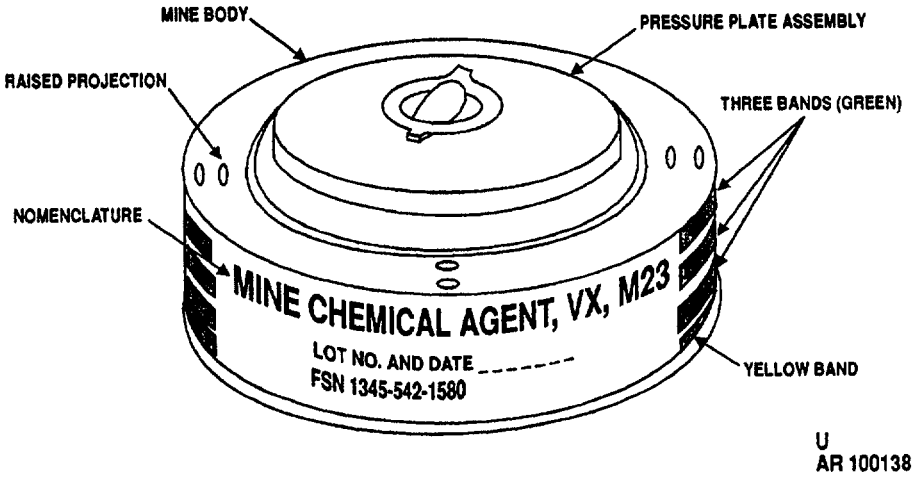

Type Classification:

S 3710 (LCC-A)

Use:

The chemical mine M23 is used to disperse a nerve agent (VX) and may be used as an antitank or an antipersonnel mine.

Description:

The chemical agent mine is prefilled, and consists of a thin-walled, steel body which houses the pressure plate assembly, a primary fuze well, and two secondary fuze wells. The pressure plate assembly contains the pressure plate, deflection spring, fuze retainer spring, and arming plug.

Functioning:

The M603 or M608 fuze is used in the primary fuze well when used as an antitank mine. When used as an antipersonnel mine, it is booby trapped by using an activator and a firing device in the side or bottom secondary fuze wells.

Tabulated Data:

Model number M23
Type ..... Chemical
Drawings:
  Assembly..... 37-1-13
Weight ..... 22.875 lb
Dimensions:
  Height..... 5 in.
  Max diam ..... 13 in.
Material ..... Steel
Thread:
  Arming plug well..... 2.313-14 NS-1
  Secondary fuze well ..... 0.688-12 NC
Fuzes (see separate write-up):
  Basic M603
  Alternate..... M608
Temperature Limits:
  Firing:
    Lower..... -25°F
    Upper ..... + 125°F
  Storage:
    Lower..... -60°F
    Upper ..... + 160°F
Shipping and Storage Data:
  Packing arrangement ..... 3 mines w/3 fuzes & 3 activ in 16 gal drum
Weight 1151b
Dimensions..... 16 in. diam x 18 in. high
  Cube ..... 3.8 cu ft
  Hazard class/division and storage compatibility group..... (12) 1.2K
  UNO serial number..... 0020
  UNO Proper shipping name ..... Ammunition, toxic
  DOT shipping class ..... Class A Explosive
  DOT marking..... EXPLOSIVE MINES
DODAC 1345-K257
Painting ..... Gray
Marking ..... Green

Explosive Data:

Weight

Item	Type	AV	Metric
M603 Mine Fuze:			
M45 Det	PA #100	1.86 gr	120 mg
	Lead Az	4.25 gr	275 mg
	RDX	1.85 gr	120 mg
M120 Booster	RDX	172.4 gr	11.18 mg
Main Charge	VX Agent	10.5 lb	4.76 kg
*M1 Activator:			
M31 Det	Army Ign	2.31 gr	150 mg
	Lead Az	3.85 gr	250 mg
	Tetryl	4.17 gr	270 mg
Booster	Tetryl	36 gr	2.3 gm

*If M1 activator used, additional explosive components will depend on type of firing device employed.

Alternate Primary Fuze - if used:

M608 Mine Fuze:			
M55 Det	NOL 130	0,23 gr	15 mg
	RDX	0.29 gr	19 mg
	Lead Az	0.79 gr	51 mg
Lead	RDX	3.33 gr	207 mg

Reference:

TM 9-1345-203-12&P

CHAPTER 5

PRACTICE, INERT, TRAINING, AND DUMMY ITEMS

THIS PAGE INTENTIONALLY LEFT BLANK

MINE, ANTIPERSONNEL, PRACTICE: M8 (M8A1)

MINE, ANTIPERSONNEL, PRACTICE: M8 (M8A1)

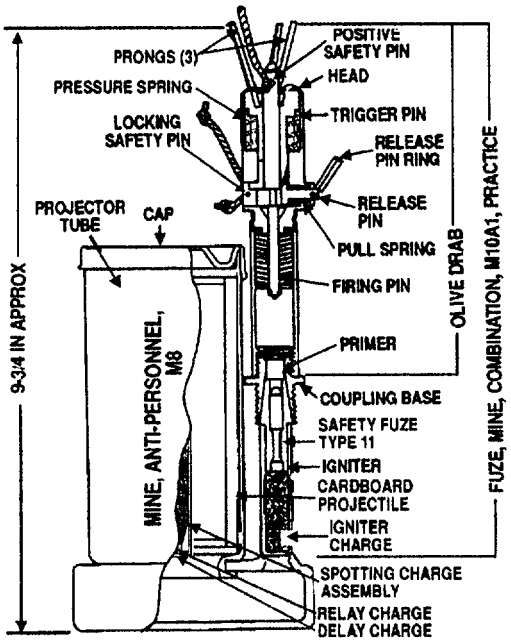

U

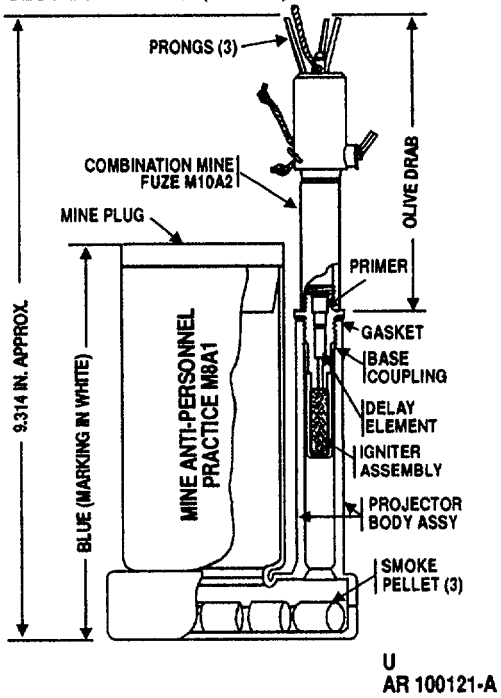

U
AR 100121-A

Type Classification:

S 1747 (LCC-B)

Use:

The antipersonnel practice mines M8 and M8A1 simulate the M2 series of antipersonnel mines and are used for training in the proper methods and precautions to be observed in the care, handling, laying, booby trapping, arming, and disarming of the M2 and M15 series mines.

Description:

General. The metal parts of these mines are similar to those of service mine M2A4. The M8 mine uses a cardboard projectile containing a spotting charge. The M8A1 uses smoke pellets to indicate activation of the mine. These practice mines may be used many times by replacing the fuzes and separately requisitionable components. The M8 requires replacement of a mine cap (metal) and cardboard projectile which contains a spotting charge. The M8A1 requires replacement of a mine plug (polystyrene) and smoke pellets.

Difference between models. The M8 practice mine ejects a cardboard projectile containing a delay and a spotting charge of black powder which bursts in the air. The M8A1 indicates functioning by emitting yellow smoke from the top of the main body. The practice mine M8 uses either fuze mine combination practice M10 or M10A1. The practice mine M8A1 uses the M10A2 fuze.

Functioning:

Mine M8 with Fuze M10 or M10A. The fuze firing mechanism is activated by an applied load of 8 to 20 pounds on any of the prongs or by a pull of 3 to 10 pounds of the trip wire. The fuze firing train ignites the delay element in the projectile and also propells it about 2 meters into the air. The delay initiates the spotting charge which explodes with a loud report and emits smoke.

Mine M8A1 with Fuze M10A2. The fuze firing mechanism is activated by an applied load of 8 to 20 pounds on any of the prongs or by a pull of 3 to 10 pounds of the trip wire. The fuze firing train ignites the yellow smoke pellets through a 4 to 5 second delay. The plastic plug is propelled in the air allowing the yellow smoke to be emitted from top of container.

Tabulated Data:

Model number M8, M8A1
Type ..... Practice, APERS
Drawings:
Assembly:
M8 82-0-112
M8A1 8862037
Weight ..... 4.5 lb
Dimensions - fuzed:
Height ..... 9.75 in.
Max diam ..... 4.03 in.
Material ..... Steel
Thread - fuze well 0.563-12UNC-1A
Fuzes (see separate write-up):
M8 ..... M10, M10A1
M8A1 M10A2
Shipping and Storage Data:
Packing arrangement ..... 2 mines w/2 fuzes
..... & 20 sets repl parts
..... in wooden box
Weight 371b
Dimensions ..... 16-1/2 x 11-1/2 x
..... 13-3/4 in.
Cube ..... 1.51 cu ft
Hazard class/division and storage compatibility group ..... (04) 1.2G
UNO serial number 0313
UNO Proper shipping name Signals, smoke
DOT shipping class ..... Class C Explosive
DOT marking ..... PERCUSSION FUZES HANDLE CAREFULLY
DODAC 1345-K105
Painting ..... Blue
Marking ..... White

Explosive Data:

Item	Type	Weight AV	Weight Metric
M10 Fuze:			
Mk V Primer	Prim Mix	0.4 gr	26 mg
4.5" Delay	Safe Fuse		
Igniter	Bik Pdr	14.98 gr	972 mg
M10A1 Fuze:			
M39A1 Prim	Prim Mix	0.4 gr	26 mg
4.5" Delay	Safe Fuse		
Igniter	Blk Pdr	14.98 gr	972 mg
M10A2 Fuze:			
M39A1 Prim	Prim Mix	0.4 gr	26 mg
Delay	TpI Comp	1.5 gr	100 mg
Delay	TpIII Comp	10 gr	650 mg
Igniter	Smk Comp	11.2 gr	725 mg
M8 Mine:			
Delay	Bik Pdr	0.57 gr	37 mg
Relay	Blk Pdr	0.77 gr	50 mg
Spot Chg	BIk Pdr	170 gr	11.02 gm
M8A1 Mine:			
Spot Chg	Yel Smk	92.7 gr	6 gm

Reference:

TM 9-1345-203-12&P

MINE, ANTITANK, PRACTICE, LIGHT: M10

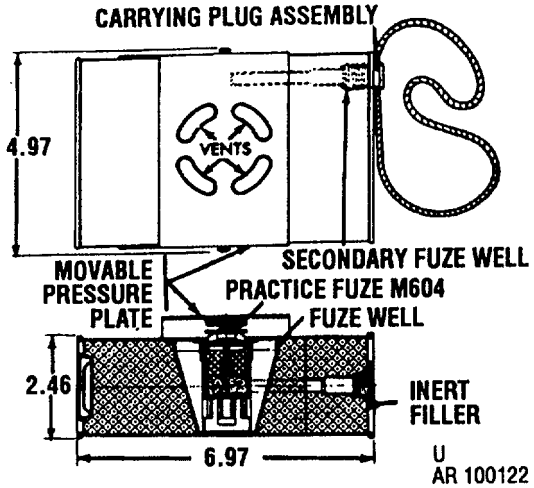

Type Classification:

OBS 11756003

Use:

The antitank practice mine M10 simulates the M7 series of light, inert, antitank mines and is used for training in the proper methods and precautions to be observed in the care, handling, laying, booby trapping, arming, and disarming of high explosive service antitank mines.

Description:

The antitank practice mine M10 consists of a rectangular, steel container, shipped empty, and is loaded with sand in the field. A primary fuze well for the practice fuze M604 is located in the top center of the mine. The smoke charge is contained in the fuze. A secondary fuze well is provided in one end of the mine for insertion of a secondary fuze for booby trapping purposes. It is taped to take any 9/16-inch threaded firing device. such as the M1 or M2, and closed with a plug to which the mine carrying cord is attached. The sand loading port is closed with a twist lock cap, supplied separately. The M10 practice mine is inert except for primer and smoke charges in the primary fuze and small charges in secondary fuze firing devices, when used. The practice fuze M604 is mounted in the top of the mine and covered by the movable striker plate of the mine and is directly activated by an external force of 120 to 240 pounds. The M10 practice mine is booby trapped with a regular firing device threaded directly into the secondary fuze well. No igniter charge or blasting cap should be used in the firing device. Practice mine M10 is activated by a force of 120 to 240 pounds on the striker .plate. This force acts directly on the practice fuze M604. Functioning of the fuze ignites a smoke charge, which emits a cloud of smoke and creates a noise. When booby trapped, the mine is activated by a pull wire. Functioning of the firing device indicates activation of the mine.

Tabulated Data:

Model number	M10
Type	AT, Practice
Drawings:	
Assembly	82-0-156
Weight - fuzed & ballasted	8.2 lb
Dimensions:	
Body	2-1/2 x 5 x 7 in.
Material	Steel
Thread:	
Primary fuze well	None
Secondary fuze well	0.563-12 NC
Fuzes (see separate write-up)	M604 Practice
Shipping and Storage Data:	
Packing arrangement	12 mines w/o fuzes in wooden box
Weight	68 lb
Dimensions	21 x 11-3/4 x 9-1/2 in.
Cube	1.36 cu ft
DODAC	1345-K220
Painting	Blue
Marking	White

Special Performance Data-- N/A

Explosive Data:

Reference:
TM 9-1345-203-12&P

Item	Type	Weight AV	Metric
M604 Fuze:			
M45 Prim	PA #100	1.62 gr	105 mg
	Blk Pdr	2.95 gr	192 mg
Smoke Chg	Smk Comp	262.3 gr	17 gm

MINE, ANTITANK, PRACTICE: M12 SERIES

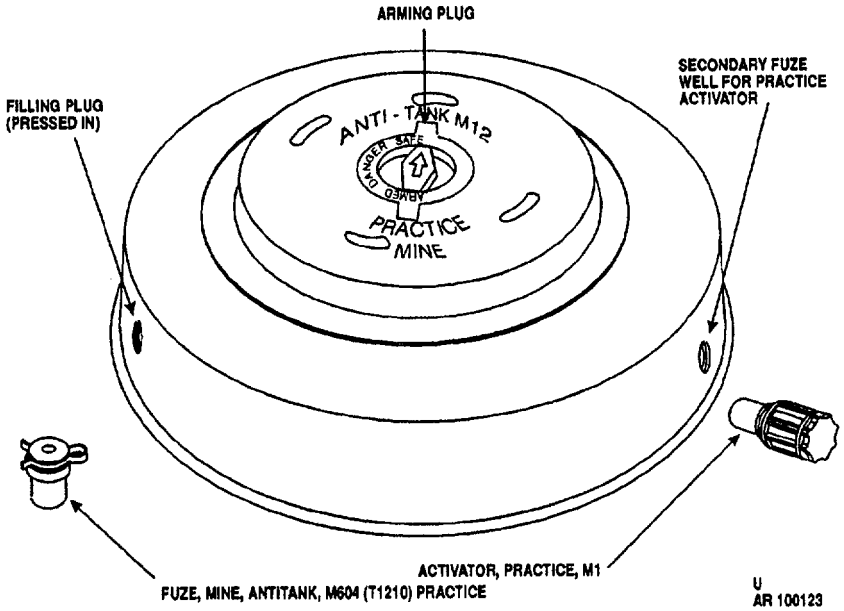

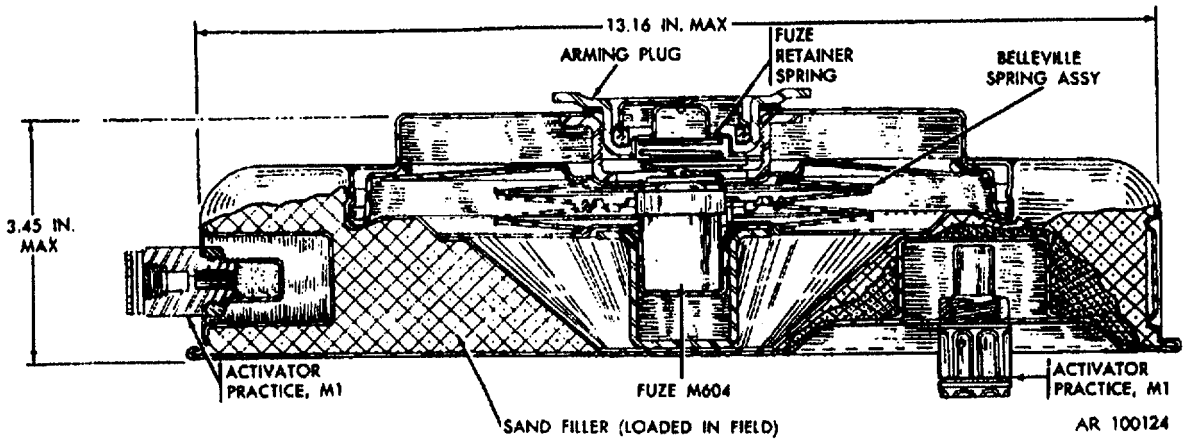

Type Classification:

C 6558 (LCC-S)

Use:

The antitank practice mine M12 (M12A1, M12B1) is used for training personnel in the precautions and proper methods to be observed in the care, handling, laying and arming, booby trapping, and disarming of the high explosive heavy antitank mine M15.

Description:

The M12 practice mine is a flat, cylindrical, steel casing externally similar to the high explosive mine M15. The mine is shipped empty, with arming plug M4 assembled over the primary fuze well, but without primary or secondary fuzes. It is to be loaded with sand and fuzed in the field. The mine is inert, but explosive components will be found in the primary fuze, and if used, in the secondary fuze and activator. The arming plug has a steel shutter which moves from a side position to a center position as the setting knob is moved from SAFE through DANGER to ARMED position. The words are appropriately color coded, green, green/red, red respectively. A wire carrying handle is provided.

Functioning:

Practice mine M12 is activated by a force of 565 ± 174 pounds on the pressure plate of the mine. This force overcomes both mine and fuze spring systems. Functioning of the practice fuze M604 ignites a smoke charge which emits

a cloud of smoke and creates a noise. When booby trapped, the mine may be functioned by a pull or by release of trip wires attached to either of the secondary fuzes. Functioning of the secondary fuzes ignites a small smoke charge in the M1 practice activator.

Tabulated Data:

Model number ..... M12, M12A1 or M12B1
Type ..... Practice, AT
Drawings:
  Assembly (M12A1) 82-0-136
Weight ..... 20 lb
Dimensions:
  Height..... 3.5 in.
  Max diam ..... 13.25 in.
Material ..... Steel
Thread:
  Arming plug well 2.313-14 NS-1
  Secondary fuze well ..... 0.688-12 NS
Fuzes (see separate write-up) ..... M604 practice
Shipping and Storage Data:
  Packing arrangement:
  M12 or M12A1..... 2 mines w/o fuzes/ wooden box
  Weight..... 38.8 lb
  Dimensions ..... 17-1/2 x 16 x 9-3/4 in.
  Cube ..... 1.56 cu ft
  M12 or M12B1 ..... 1 mine w/o fuze/ mtl cntr
    Weight..... 18.91b
    Dimensions ..... 14 x 13-3/4 x 4-1/8 in.
    Cube ..... 0.46 cu ft
Quantity-distance class ..... N/A
DODAC 1345-K230
Painting ..... Blue
Marking ..... White

Explosive Data:

Item	Type	Weight AV	Weight Metric
M604 Practice Fuze:			
M45 Primer	PA #100	1.62 gr	105 mg
	Blk Pdr	2.96 gr	192 mg
Smk Comp		262.3 gr	17 gm

Reference:

TM 9-1345-203-12&P

MINE, ANTIPERSONNEL: M16A1, INERT

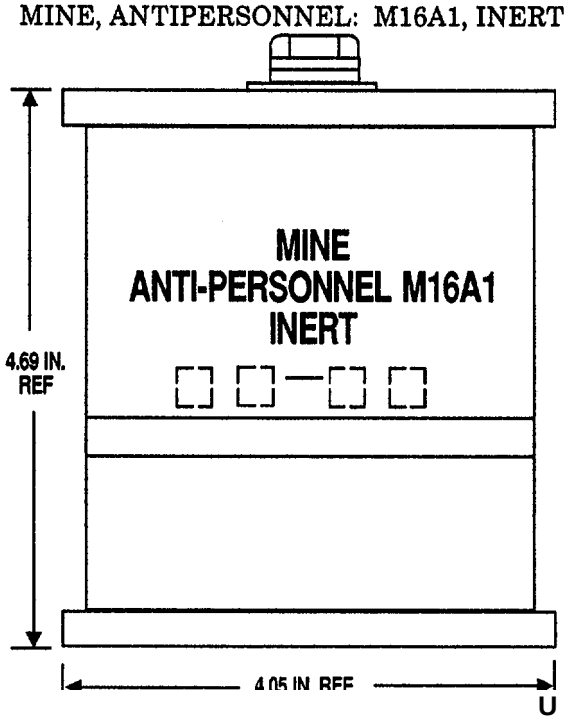

AR 101909-A

Type Classification:

12816009 (LCC-B)

Use:

This mine is used for training purposes only. It uses the M605 Inert Fuze and contains no explosive components. Since the dimensions are the same as the live M16A1 mine, care must be exercised not to use live components with it.

Tabulated Data:

Model number ..... M16A1, Inert
Type ..... Training
Drawings:
Assembly..... 9324631
Box, fiber packing..... 8863609
Box, wirebound..... 7548179

For additional pertinent details (including weight, dimensions, material, thread, fuze, temperature limits, shipping and storage data) see page 3-10.

Painting ..... Blue
Marking ..... White
DODAC ..... Not listed - Parts packed under NSN 1345-00-799-7391

Reference:

TM 9-1345-203-12&P

THIS PAGE INTENTIONALLY LEFT BLANK

MINE, ANTIPERSONNEL, TRAINING: M81

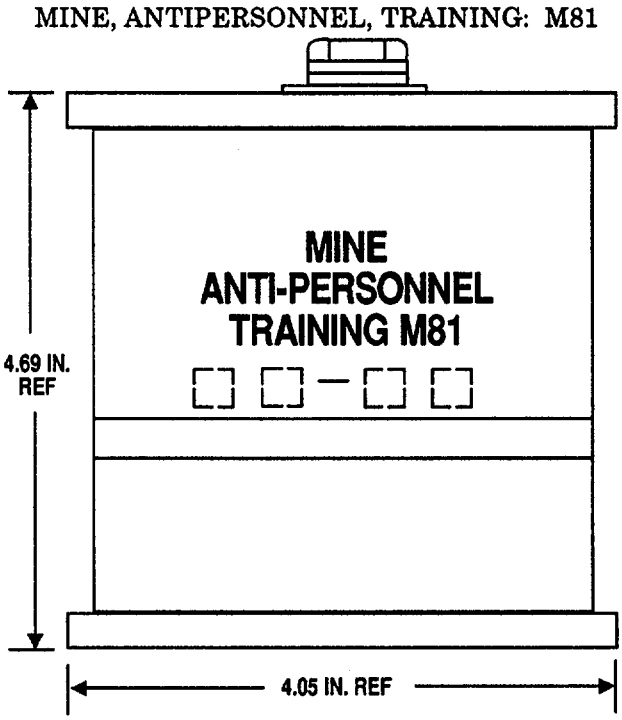

Type Classification:

12816001 (LCC-A)

Use:

This mine is used for training purposes only. It uses the M605 Inert Fuze and contains no explosive components. Since the dimensions are the same as the live M16A1 mine, care must be exercised not to use live components with it.

Tabulated Data:

Model number ..... M81, Training
Type ..... Training
Drawings:
Assembly..... 9332440
Box, fiber packing..... 8863609
Box, wirebound..... 7548179

For additional pertinent details (including weight, dimensions, material, thread, fuze, temperature limits, shipping and storage data) see page 3-10.

Painting ..... Bronze
Marking ..... White
DODAC ..... Not listed
NSN 6920-01-136-3628

Reference:

TM 9-1345-203-12&P

THIS PAGE INTENTIONALLY LEFT BLANK

MINE, ANTITANK: TRAINING, M80

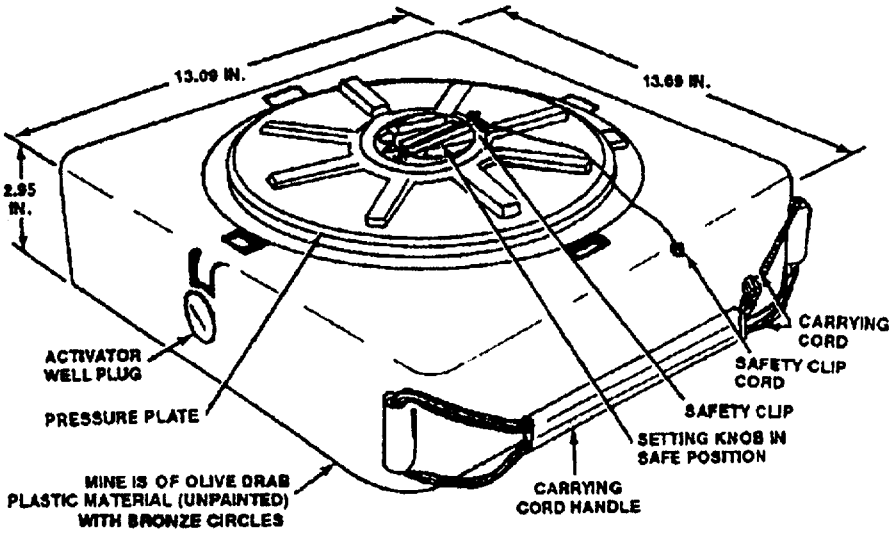

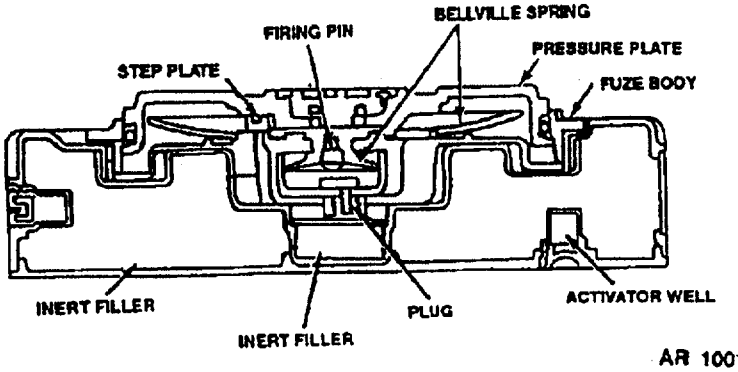

AR 100134-A

Type Classification:

S 03788003 (LCC-A)

Use:

Inert mine M80 is used for training personnel in the precautions and proper methods to be observed in the care, handling, laying and arming, booby trapping (using an activator/firing device without primer), and disarming of heavy nonmetallic mine, M19.

Description:

This mine and fuze are completely inert (contain no explosive). They are constructed of parts identical to those used in the M19 service mine and the M606 service fuze.

NOTE

The threading of the secondary fuze wells will therefore accept the M1 or M2 activators, which should never be used. Use only the M1 practice activator, despite the lack of good fit.

Functioning:

There is not explosive functioning of the mine. The mine can be set on Safe or Armed by the setting knob, and the safety clip can be removed and replaced.

Tabulated Data:

Model number..... M80
Type ..... AT, Training
Drawings:
Assembly..... 9321449
Metal parts 9321447

Weight-fuzed ..... Approx 28 lb
Dimensions:
Height 3.7 in. ..... (w/M606 Fuze)
Max diam 13.09 in.
Material ..... Plastic
Thread:
M606 Inert Fuze (detonator holder well) 0.563-12UNC-1A
Secondary fuze well 0.75-UNS-1B
Fuze (see separate write-up) ..... M606, Inert
Temperature Limits ..... N/A
Shipping and Storage Data:
Packing & marking for box 9321541
Box, wirebound, packing 9321540
DODAC 1345-K232
Painting ..... All Bronze or OD w/Bronze (Copper) Colored Circles
Marking ..... White

Reference:

TM 9-1345-203-12&P

MINE, ANTITANK, PRACTICE: HEAVY, M20

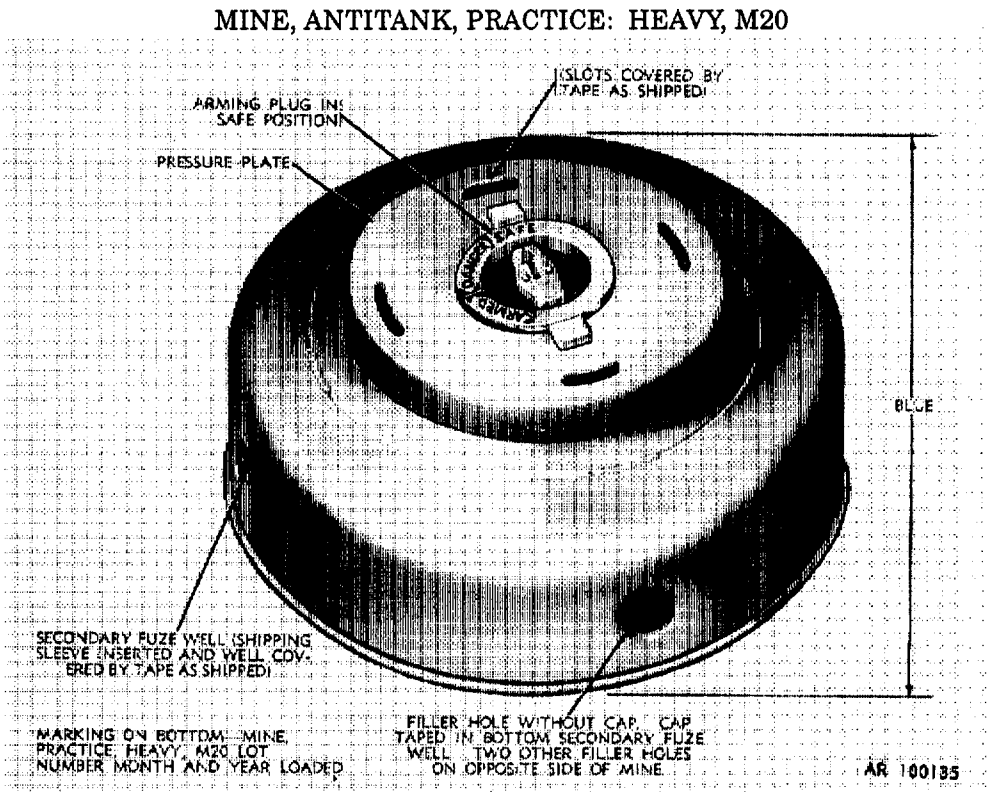

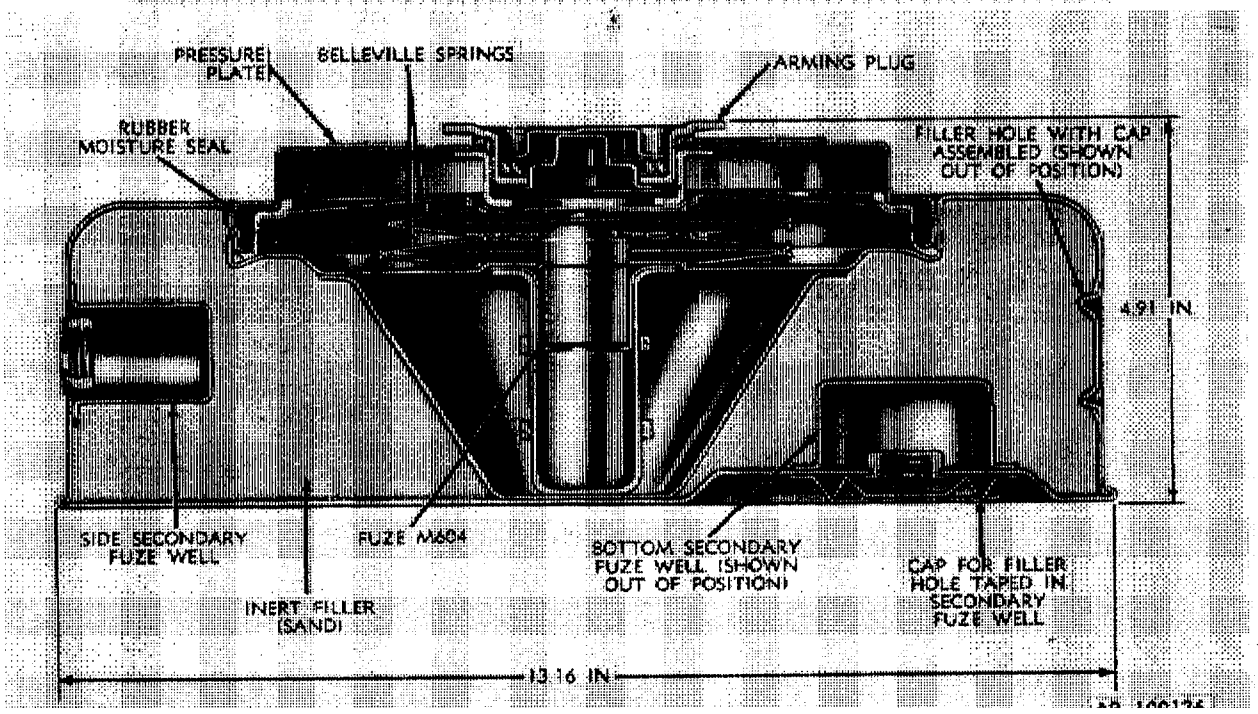

Type Classification:

S 36841 (LCC-A)

Use:

Practice mine M20 is used for training personnel in the proper methods and precautions to be observed in the care, handling, laying and

arming, booby trapping, and disarming of the high explosive, heavy, antitank mine M15.

Description:

The M20 mine has a squat cylindrical steel casing, externally similar to the high explosive mine M15, but differs by having three filler holes around its periphery, and perforations around the arming plug and secondary fuzing wells, indicative of inert status. The mine is issued empty, with arming plug M4 assembled, but lacking either primary or secondary fuze. It is to be loaded with sand and fuzed in the field. The mine is inert except for the smoke charge and M45 primer in the M604 fuze, the smoke charge primer in the M1 practice activator, and the primer in the secondary fuzing device. The primary fuze is the fuze M604. The secondary fuze wells will accept practice antitank mine activator M1 and any firing device having 9/16 inch threading. A wire carrying handle is provided. The mine, with M604 fuze, is activated by the weight of an intermediate or heavy tank. Lighter equipment or personnel will not overcome the spring system of the mine and actuate the fuze.

Functioning:

Practice mine M20 is activated by a force of 565 ± 174 pounds, which is sufficient to overcome both spring systems, that in the mine, and that in the M604 fuze. Although intended for interdiction of medium or heavy tanks, the mine can be functioned, when booby trapped, by pull or release, of either of two trip wires attached to a secondary firing device. The activation of the primary fuze or either of the secondary fuzes releases a cloud or smoke and creates a noise, indicative of mine functioning.

Tabulated Data:

Model number M20
Type ..... Pract, Heavy, AT
Drawings:
  Assembly..... 7548124
Weight-fuzed & ballasted ..... 31.46 lb
Dimensions:
  Height..... 4.91 in.
  Max diam ..... 13.16 in.
Material ..... Steel
Thread:
  Arming plug 2.313-14 NS-1A
  Second fuze well ..... 0.688-12 NC
Fuze (see separate
  write-up) M604
Shipping and Storage Data:
  Packing arrangement ..... 3 mines w/arming wrench in wooden box
  Weight..... 50.4 lb
  Dimensions ..... 17-5/8 x 16-1/8 x 17-1/2 in.
  Cube ..... 2.5 cu ft
  Quantity-distance class..... N/A
DODAC 1345-K231
Painting ..... Blue
Marking ..... White

Explosive Data:

Item	Type	Weight AV	Weight Metric
M604 Fuze:			
M45 Primer	PA #100	1.5 gr	105 mg
	Blk Pdr	2.96 gr	192 mg
Smk Chg	Smk Comp	262.3 gr	17 gm
M1 Practice Activator (when used):			
Photo-fish	TP III C1A	2.34 gr	151.5 mg
Quickmatch	TP II C1A		
Smk Chg	Smk Comp	20 gr	1.4 gm

Reference:

TM 9-1345-203-12&P

MINE, ANTIPERSONNEL, PRACTICE: M35

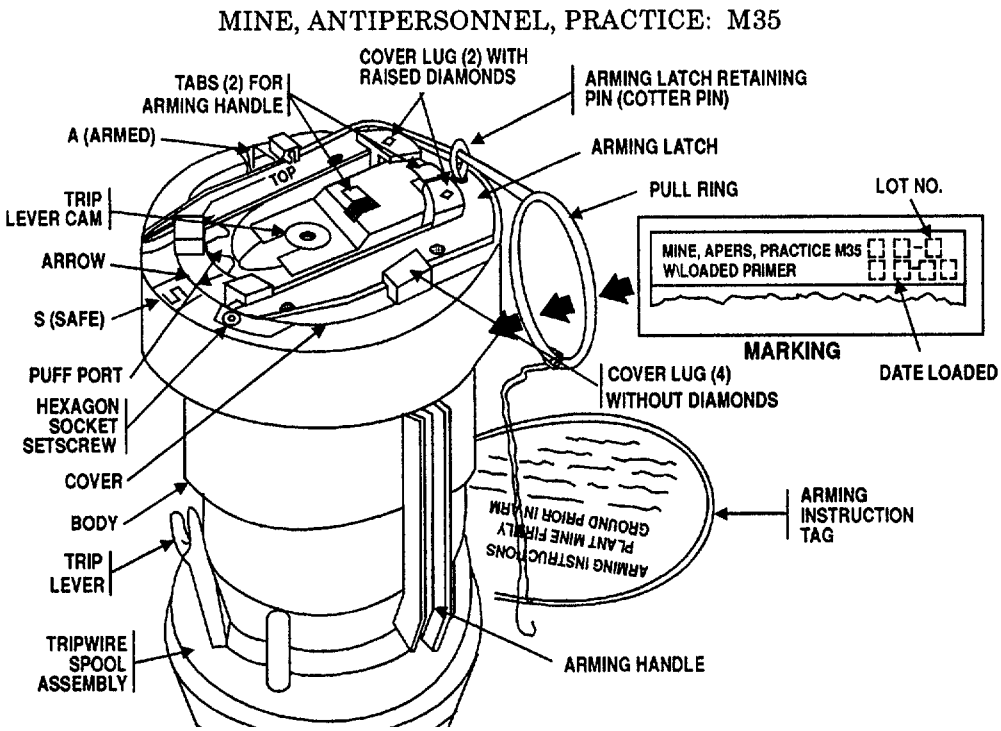

Type Classification:

OBS 11846007

Use:

The M35 practice mine is used to indoctrinate trainees in the proper handling, emplacement, arming and disarming techniques required for emplacement of the antipersonnel service mine M26.

Description:

The M35 practice mine is similar to the M26 mine with the following exceptions:

External - color and markings, presence of a puff port in the cover and a hexagonal socket setscrew instead of a cover locking pin.

Internal - dye capsule, simulator and panel assembly, cartridge case and sleeve assembly, spring housing retainer and spring housing assembly.

The M35 practice mine is reusable and is expected to be reloaded at least 15 times before requiring repairs. Attached to, but easily removable from the mine are the following accessories: Arming Handle, Arming Instruction Tag, Trip Lever, and Spool Assembly. Four 20-foot tripwires, two colored olive drab and two tan, are stored on the spool.

Functioning:

After arming, and removal of the arming latch, a weight of 14 to 28 pounds on the mine top or a pull on the assembled top lever will function the 32 caliber cartridge case. The hot gases puncture the dye capsule and cause the blue dye powder to be expelled in a discernable plume. The mine may be rigged for tripwire activation. Remove the trip lever from storage in the spool assembly and insert in the threaded well in the cam, top, center. Attach one or more of the trip wires, as required.

Tabulated Data:

Model number M35
Type ..... Practice, AP
Drawings:
  Assembly..... 9212294
Weight ..... 2.2 lb
Dimensions:
  Height..... 5.7 in.
  Max diam ..... 3.1 in.
Material ..... Aluminum/Steel
Fuze ..... integral)

Shipping and Storage Data:
Packing arrangement ..... 3 mines w/acc 3/fbr ctn, 6 ctns (18 mines) wooden box
Weight ..... 60 lb
Dimensions ..... 21-1/4 x 12-1/2 x ..... 9-3/4 in.
Cube ..... 1.5 cu ft
Hazard class/division and storage compatibility group 1.4G
UNO serial number 0317
UNO Proper shipping name ..... Mines
DOT shipping class ..... Class C Explosive
DOT marking ..... PERCUSSION FUZES HANDLE CAREFULLY
DODAC 1345-K106
Painting ..... Blue
Marking ..... White

Explosive Data:

Item	Type	Weight AV	Weight Metric
32 Caliber Primer	Cartridge	1.5 gr	105 mg

Reference:

TM 9-1345-203-12&P

MINE, ANTIPERSONNEL, PRACTICE: M68

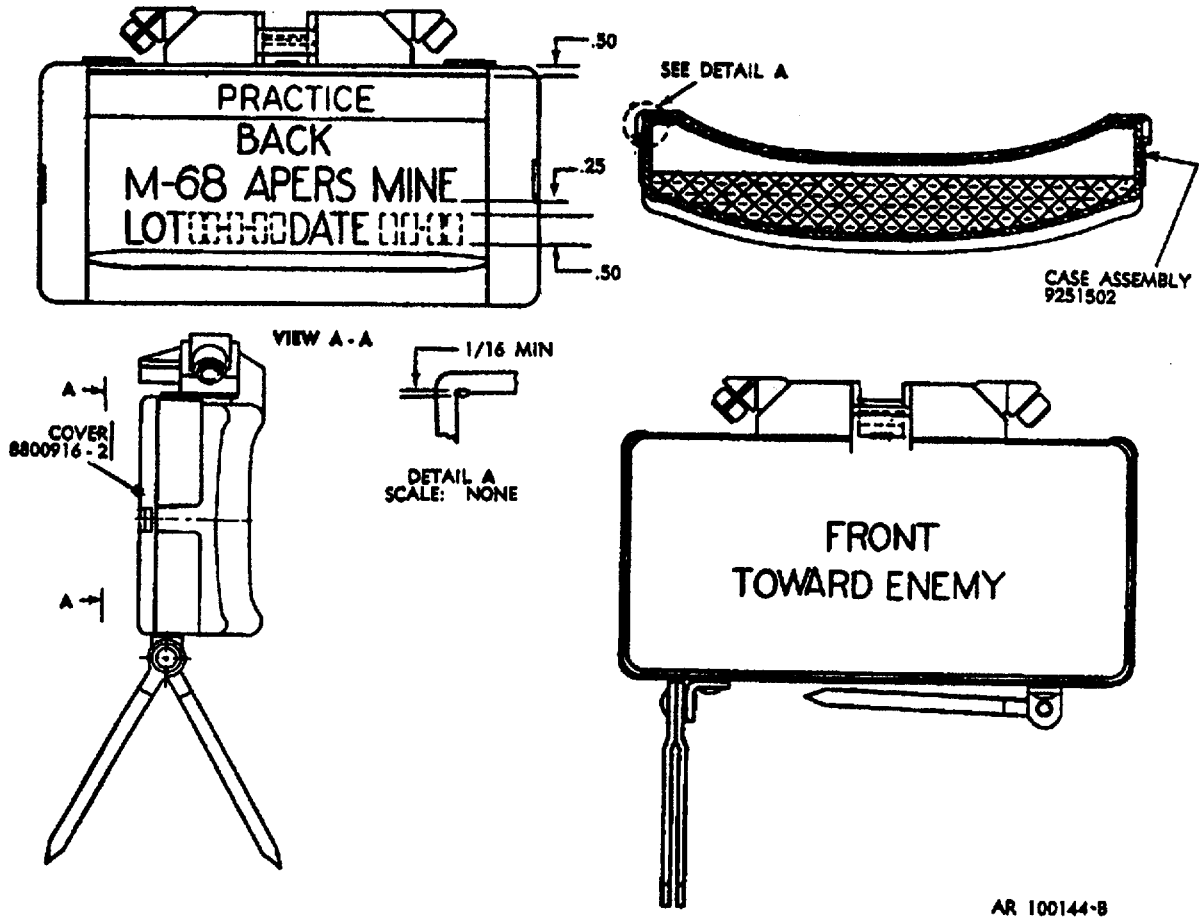

Type Classification:

S 8880 (LCC-A)

Use:

The M68 practice mine simulates the M18 series mines, and is used for training in the proper methods and precautions to be observed in the care and handling, booby trapping, arming, and disarming of high explosive service antipersonnel mines.

Description:

The practice mine body M33 is included in a kit designated Mine, APERS, Practice, M68, which also includes the M10 practice blasting cap, the M57 firing device and the M40 test set, all packed in the M7 bandoleer. The external appearance of the M33 practice mine is identical to the M18A1 except for color and marking. An inert filler replaces the high explosive. The M57 firing device, M7 bandoleer, and the M40 test set are the same as used with M18A1 mine. The M10 blasting cap is inert. The lead wires of the M10 are shorted to provide electrical continuity.

Functioning:

The only components of the item that function are the M57 firing device and the M40 test set. There is no explosive functioning.

Tabulated Data:

Model number M68
Type ..... APERS, Practice,
Drawings:
Assembly..... 9251501
Kit 9251503
Weight (approx) ..... 3.5 lb
Dimensions:
Width ..... 8.5 in.
Height..... 3.25 in.
Thickness..... 1.375 in.
Material ..... Plastic
Thread:
Detonator wells..... 0.563-12UNC-1A
Fuze ..... M10 practice (shunted) blasting cap
Temperature Limits ..... NA

Shipping and Storage Data:
Packing arrangement ..... 1 mine, 1 cap, 1 firing device, 1 test set per bandoleer, 6 bandoleers per wooden box (6 mines)
Dimensions ..... 15-1/4 x 10-1/2 x 14-3/8 in.
Cube ..... 1.4 cu ft
Weight ..... 0.53 lb
DODAC 1345-K139
Painting ..... Blue or Green with blue stripes
Marking ..... White

Reference:

None

MINE, ANTITANK, PRACTICE: M69

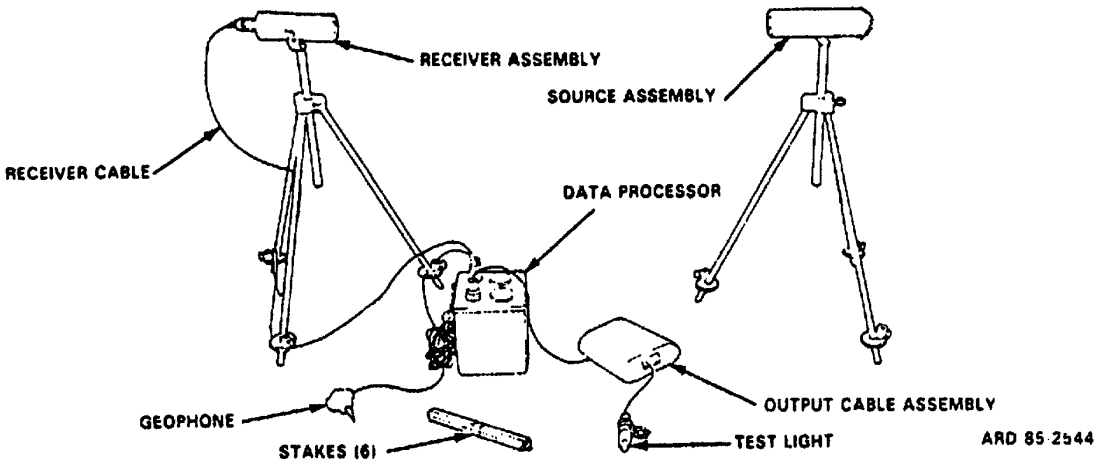

Type Classification:

OBS 03866007
(Has not been produced and is not in field)

Use:

The M69 practice antitank mine is used for training personnel in the precautions and proper methods to be observed in the care, handling, laying, and disarming of the M66 off-route antitank mine.

Description:

The practice mine M69 differs from the M66 mine, which it simulates, in that the lethal mechanism, the HE rocket, is replaced by a rocket having an inert warhead M29A2. The other components of the mine are identical to the M66 mine.

Tabulated Data:

Model number M69
Type ..... Off-route, Practice, AT
Drawings:
  Assembly..... 9256479
Weight:
  Total ..... 40 lb
  Rocket only ..... 9 lb
Dimensions:
  Rocket:
    Length ..... 23.55 in
  Max diam ..... 3.5 in.
Materials:
  Rocket:
    Motor ..... Steel
    Warhead..... Cast iron
  Rocket launcher ..... Plastic
  IR Source ..... Aluminum
  IR Receiver ..... Aluminum
  Data Processor..... Aluminum
  Geophone ..... Plastic/Steel
Fuzes:
  System M619
  Type ..... Electronic
  Rocket..... M405A2
  Type ..... Mech-inert
Battery types (not included):
  2 - req'd for Data Proc BA-3202/U
  1 - req'd for Data Proc BA-1114/U
  1 - req'd for IR Source BA-1114/U
Temperature Limits:
  Firing:
    Lower..... -40°F
    Upper ..... +125°F
Shipping and Storage Data:
  Packing arrangement ..... 1 mine M69 w/fuze M619 barrier bag/ wirebound box
Weight ..... 70 lb
Dimensions ..... 33-3/4 x 22-7/8 x 12-5/8 in.
Cube ..... 5.4 cu ft
Hazard class/division and storage compatibility group ..... (12) 1.2F
UNO serial number--------
DOT shipping class -------- Class C Explosive
DOT marking ---------- ROCKET AMMUNITION W/INERT LOADED PROJECTILE
DODAC 1345-K233
Painting:
Rocket ..... Blue
Marking:
Rocket ..... White

Explosive Data:

Item	Type	Weight AV	Weight Metric
M29A2 Rocket Motor:			
M2 Elec Squib	Flash Pdr	1 gr	65 mg
Igniter	Blk Pdr	54 r	3.5 gm
Propellant	M7	0.35 lb	159 gm

Reference:

None

ACTIVATOR, ANTITANK MINE: PRACTICE, M1

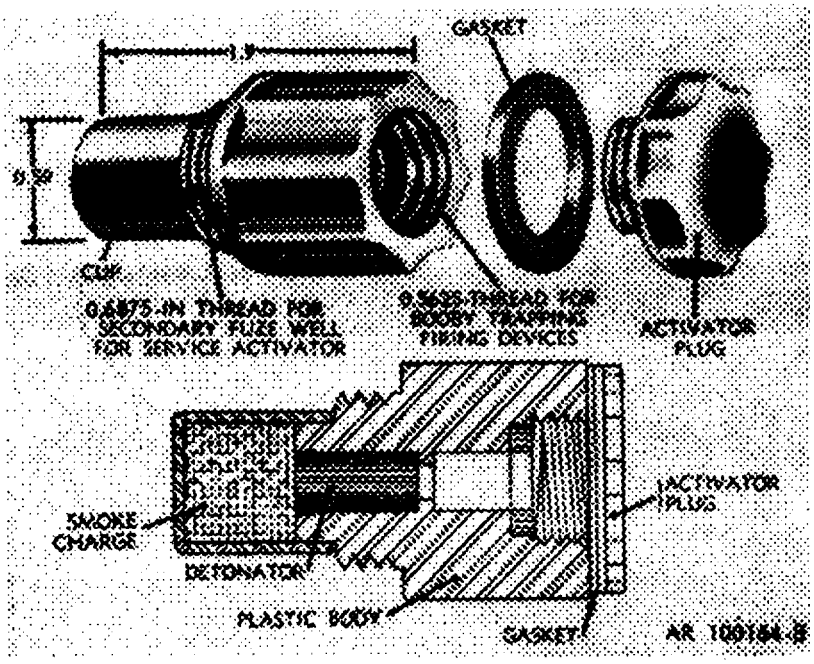

Type Classification:

S 36841 (LCC-A)

Use:

This activator is used to adapt any inert, antitank practice mine having 11/16-inch threaded secondary fuze wells to the use of a practice booby trapping firing device.

Description:

The practice activator is made of black plastic (newer type, blue) and has a threaded closing plug and gasket. The body is internally threaded to receive a firing device. The other end is externally threaded. The body contains a igniting charge and the cylindrical unthreaded cup end (color blue) contains the smoke charge.

Functioning:

This activator operates when the action of a firing device initiates the igniter charge which, in turn, ignites the smoke charge, thus releasing a puff of white smoke with accompanying noise.

Tabulated Data:

Model number	M1
Type	Practice
Weight	17 gm
Length	1.99 in.
Material	Plastic
Threading:	
External	0.6875-12NS-SPEC
Internal	0.5625-12-NC-SPEC
Drawings:	
Assembly	73-9-46
Parts	73-9-47
Temperature Limits:	
Firing:	
Lower	40°F
Upper	+125°F
Storage:	
Lower	-60°F
Upper	+160°F
Shipping and Storage Data:	
Packing arrangement	180 activators - 1 per metal container 180 containers in wooden box

Container:
Weight..... 54.5 lb
Dimensions ..... 16-3/4 x 14-13/16 x
..... 16-3/8 in.
Cube ..... 2.3 cu ft
Hazard class/division and
storage compatibility
group 1.4S
UNO serial number 0349
UNO Proper shipping
name ..... Articles, explosive
DOT shipping class..... Class C Explosive
DOT marking ..... PERCUSSION
..... FUZES HANDLE
..... CAREFULLY
DODAC 1345-K002
Painting ..... *Black & Blue
Marking ..... N/A
*Newer models, all blue

Explosive Data:

Item	Type	Weight AV	Weight Metric
Igniter:			
Flash Pdr	Tp III C1 A	2.34 gr	151.5 mg
Fuze, quick match	Tp II C1 A		
Smk Chg	Smk Comp	20 gr	1296 mg

Reference:

TM 9-1345-203-12&P

MINE, ANTITANK, PRACTICE: M79

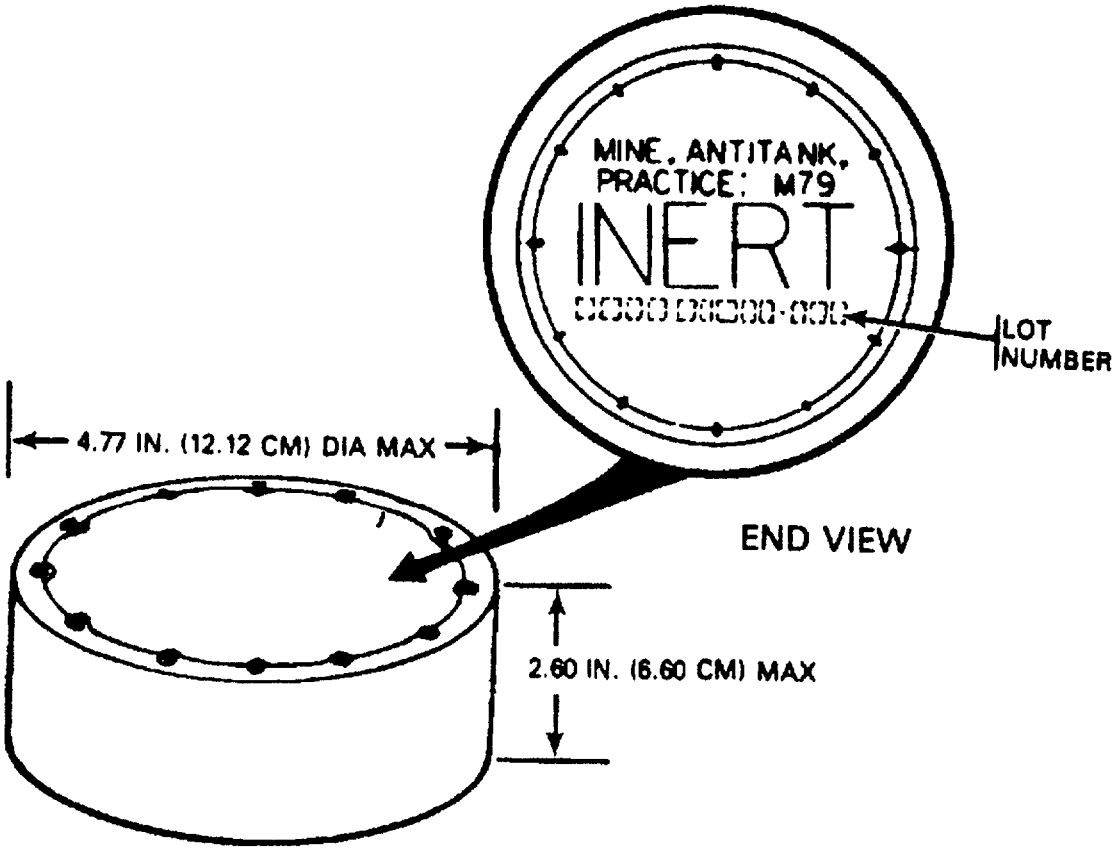

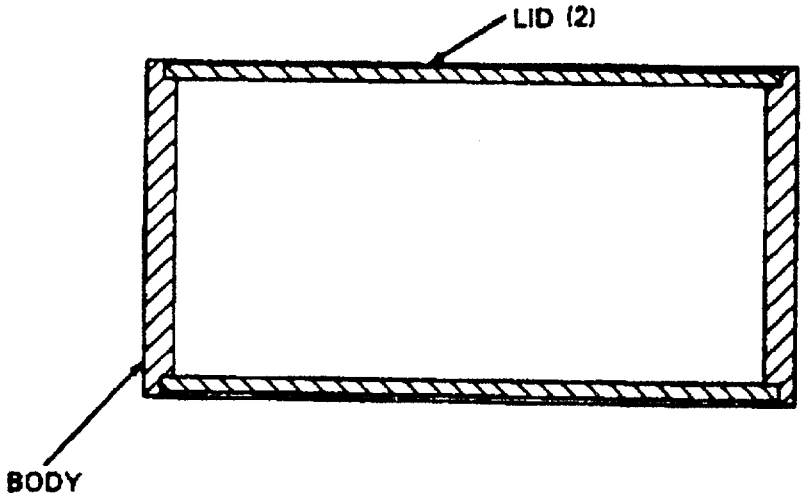

ARD 84-1700

Type Classification:

STD-LCC-A (LET 4-11-80, ARDC)

Use:

The practice antitank mine M79 simulates the HE antipersonnel mine M74 and the HE antitank mine M75 and is used for training purposes. The mine is emplaced by the ground vehicle mine dispenser M128.

Description:

The mine is cylindrical in shape, and is similar in appearance to the antipersonnel mine M74 and the antitank mine M75. The mine is inert and it is fabricated of thick-wall steel tubing with a sheet metal closure lid staked in each end. The mines are shipped and stored in a sealed, desiccated container.. The container holds 8 sleeves, each containing 5 mines, for a total of 40 mines per container. The containers are palletized, with six containers per pallet.

Functioning:

There is no explosive functioning of this mine.

Tabulated Data:

Mine, Antitank, Practice: M79:
- Painting ..... Blue
- Marking ..... White
- Height (max) ..... 2.60 in. (6.60 cm)
- Diameter (max) ..... 4.77 in. (12.12 cm)
- Weight..... 3.55 lb (1.61 kg)
- Material ..... Steel tubing
- Operational Temperature Limits..... Not applicable

Explosive weight per mine ..... None (inert)

Physical security category ..... Nonsensitive

DODAC 1345-K234

Packing arrangement..... 5 mines per sleeve
..... 8 sleeves per container
..... 6 containers per pallet

NSN 1345-01-074-9370

Shipping and Storage
- Container - EMPTY:
  - Length..... 27.30 in. (69.30 cm)
  - Width ..... 14.10 in. (35.81 cm)
  - Height..... 15.20 in. (38.61 cm)
  - Weight..... 55.0 lb (25.0 kg)
  - Cube ..... 3.40 cu ft
    ..... (0.10 cu m)
  - NSN 8140-01-089-2763
  - Part No..... 9313655

Shipping and Storage
- Container - LOADED:
  - Weight..... 214.0 lb (97.1 kg)
  - Storage compatibility group..... Inert
  - Quantity-distance class for depot storage..... Not applicable
  - Quantity-distance class for field storage..... Not applicable
  - DOT shipping class ..... Not applicable
  - DOT markings ..... AMMUNITION,
    ..... NON-EXPLOSIVE
  - US Coast Guard classification ..... AMMUNITION,
    ..... NON-EXPLOSIVE
  - Shelf life ..... Indefinite

Storage Temperature Limits ..... Not applicable

Sleeve (empty):
- Color ..... Green
- Length..... 24.48 in. (62.18 cm)
- Width ..... 5.63 in. (14.30 cm)
- Height..... 3.50 in. (8.89 cm)
- Weight..... 2.12 lb (0.96 kg)

Pallet (loaded w/full containers):
- Length..... 55.50 in.
  ..... (140.97 cm)
- Width ..... 43.00 in.
  ..... (109.22 cm)
- Height..... 23.13 in. (58.75 cm)
- Weight (approx incl dunnage)..... 1465 lb (665 kg)
- Cube ..... 31.93 cu ft
  (0.90 cu m)

References:

TM 9-1345-210-23&P
TM 9-1095-205-10
SC 1340/98-IL

FUZE, MINE, ANTITANK: M603, INERT

FUZE, MINE, ANTITANK: M603, INERT

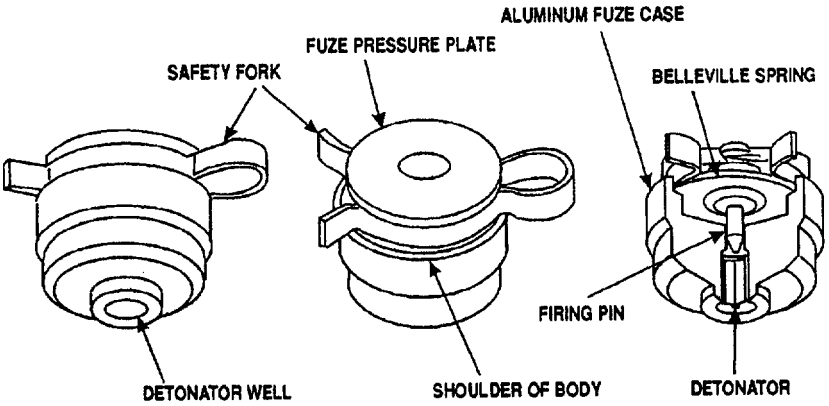

Type Classification:

S 36841 (LCC-A)

Use:

The M603 inert fuze is an instantaneous, mechanical, pressure-type fuze used with the inert or empty light antitank M7 series mine.

Description:

The M603 inert fuze body contains a firing pin assembly, a cover assembly, a safety fork (clip). The firing pin is actuated by a belleville spring.

Functioning:

A load of 140 to 240 pounds is required to depress the belleville spring and cause it to snap into reverse, driving the firing pin into the dummy detonator. When assembled to the mine M7A2, this activating force is received directly from the movable pressure plate of the mine. No visible or audible functioning signal is provided.

Tabulated Data:

Model number ..... M603 inert
Type ..... AT, mech, inert
Drawings:
  Metal parts 73-9-55C
Weight ..... 1.52 oz
Dimensions:
  Height..... 1.17 in.
  Max diam ..... 1.14 in.
Material ..... Aluminum and Steel
Thread ..... None
Temperature Limits ..... N/A
Shipping and Storage Data:
  Packing ..... Not packed separately. Available with M7A2 empty or inert mines. (10 sets in metal box)
  Hazard class/division and storage compatibility group .....
  UNO serial number.....
  DOT shipping class .....
  DOT marking.....
DODAC 1345-K210
Painting ..... Unpainted
Marking ..... Metal stamped
Special Performance Data ..... N/A

Reference:

TM 9-1345-203-12&P

THIS PAGE INTENTIONALLY LEFT BLANK

FUZE, MINE, ANTITANK, PRACTICE: M604

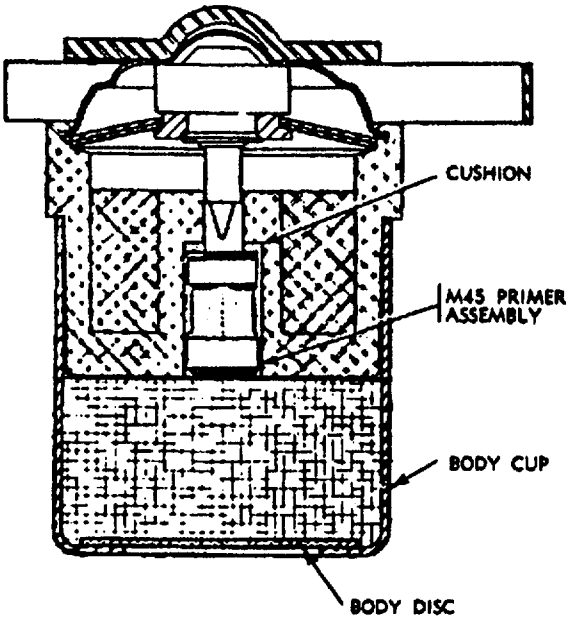

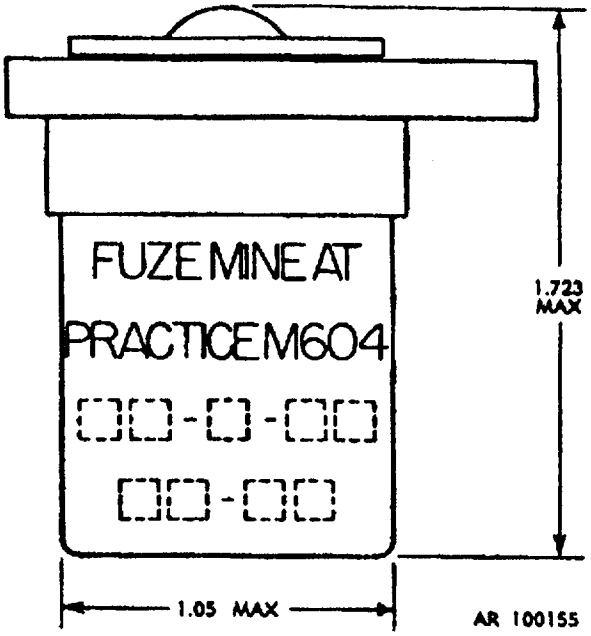

Type Classification:
S 36841 (LCC-A)

Use:

Fuze M604 is used to activate the M12, M12A1, and the M20 antitank practice mines.

Description:

The fuze is an instantaneous, mechanical, pressure-actuated type. It consists of a steel body containing the firing pin assembly, cover assembly, primer and smoke charge and a safety fork (clip). It is issued separately and assembled to the mine in the field. After the fuze has been fired it is replaced by a new one.

Functioning:

A minimum force of 140 to 240 pounds depresses the pressure plate which causes the belleville spring to snap into reverse, driving the firing pin into the primer. The primer ignites the smoke composition which flashes emitting a cloud of smoke and creating a noise.

Tabulated Data:

Model number M604
Drawings:
  Assembly..... 73-9-86
Type ..... Practice
Weight:
  Loaded ..... 2.835 lb
Dimensions:
  Height..... 1.723 in.
  Max diam ..... 1.05 in.
Material Aluminum
Thread None
Temperature Limits:
  Firing:
    Lower..... 40°F
    Upper ..... +125°F
Shipping and Storage Data:
Packing arrangement..... 1 fuze in metal containers/180 containers (180 fuzes) in wooden box
  Weight..... 62 lb
  Dimensions ..... 16-1/2 x 14-7/8 x 12-7/8 IN.
  Cube ..... 1.90 cu ft
  Hazard class/division and storage compatibility group..... 1.4G
  UNO serial number..... 0317
  UNO Proper shipping name ..... Fuzes, igniting
  DOT shipping class ..... Class C Explosive
  DOT marking..... HANDLE CAREFULLY KEEP FIRE AWAY
DODAC 1345-K051
Painting ..... Blue
Marking ..... White

Explosive Data:

Item	Type	Weight AV	Weight Metric
M604 Fuze:			
M45 Primer	PA #100	1.62 gr	105 mg
	Blk Pdr	2.96 gr	192 mg
Smk Chg	Smk Comp	262.3 gr	17 gm

Reference:

TM 9-1345-203-12&P

FUZE: M606, INERT

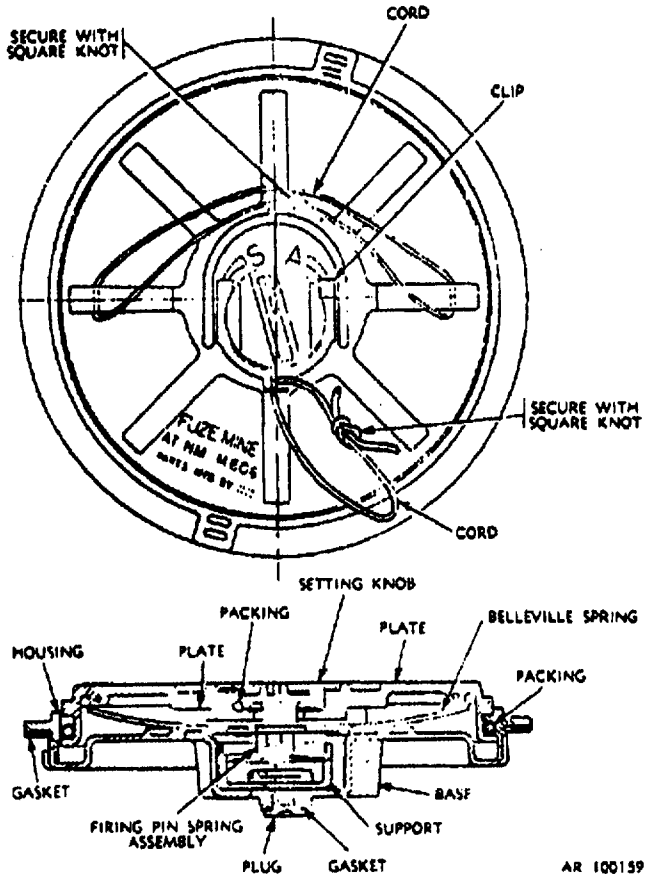

Type Classification:
S 11756003 (LCC-A)

Use:

M606 inert fuze is used with Mine Antitank, Training, M80.

Description:

M606 inert fuze is identical to the M606 service fuze, except that it contains no explosives. The fuze body contains a pressure plate, a belleville spring, a setting knob, a step plate, a firing pin assembly, and a shipping plug.

Functioning:
There is no explosive functioning of this fuze.

Tabulated Data:

Model number ..... M606 Inert
Type ..... AT, Mech, Inert
Drawings:
Metal Parts 8796140
Weight ..... Approx 2.4 lb
Dimensions:
Height..... 2.7 in.
Max diam ..... 10 in.
Material Plastic
Thread:
Fuze body ..... None
Detonator holder assembly 0.563-12 UNC-1A
Temperature Limits ..... N/A
Shipping and Storage Data:
Packing arrangement ..... As required
DODAC ..... Not listed - parts stocked under NSN 1345-00-077-2143
Painting Olive Drab w/ Bronze Circles on Top
Marking ..... White

Reference:

TM 9-1345-203-12&P

THIS PAGE INTENTIONALLY LEFT BLANK

CHAPTER 6

ACTIVATORS AND FUZES

THIS PAGE INTENTIONALLY LEFT BLANK

ACTIVATOR, ANTITANK: M1 (M2)

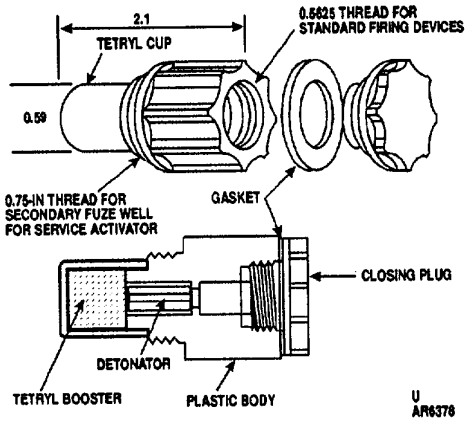

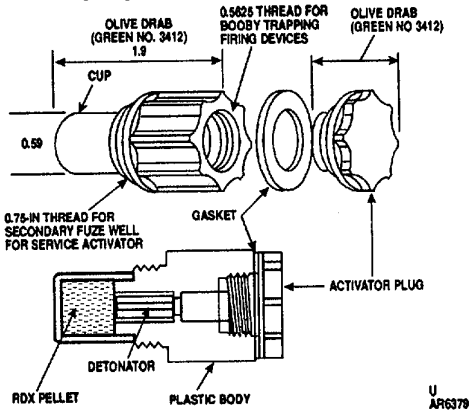

Type Classification:

M1 S 36841 (LCC-B)
M2 S 36841 (LCC-A)

Use:

Activators M1 and M2 are essentially detonator boosters and are used as adapters with any one of several kinds of pull type or pull release type firing devices to supply antitank mines with a secondary fuze for antilift/booby trapping purposes.

Description:

The activator bodies are made of plastic and are threaded externally to fit the 3/4-inch secondary fuze well of service antitank mines. The activators are threaded internally to accept service firing devices. The detonator is cemented within the body and a booster charge is contained in a cylindrical cup cemented to one end. Each activator is shipped with a closing plug and gasket.

Difference between models. Activator M1 is used with antitank mine M15 and activator M2 is used with nonmetallic antitank mine M19. Earlier M1 activators were made of black plastic, while newer types are made of olive-drab plastic. The M1 activator uses tetryl for the booster while the M2 model uses RDX.

Functioning:

The activator performs the function of an adapter, to fit the firing device to the mine. As a detonator booster, it increases the output of the secondary firing devices, assuring detonation of the mine main charge.

Precautions. Activator misfires resulting from failure of the detonator or booster to fire, may be due to excess cap sealing compound in the flash hole. Examine the cavity in the body of the activator to be sure it is free of foreign matter. At the same time, check tip of firing device, especially the flash hole, to be sure it is free of foreign matter.

Tabulated Data:

Model numbers M1, M2
Type Detonator-booster
Drawings:
  Assembly:
    M1 73-9-16
    M2 7548048
Weight ..... 0.04 lb
Dimensions:
  Length:
    M1 ..... 2.14 in.
    M2 ..... 2.10 in.
  Diameter ..... 0.975 in.
Material ..... Plastic
Thread:
  External 0.75-12UNS-1A
  Internal 0.563-12UNC-2B
Temperature Limits ..... N/A
Shipping and Storage Data:
  Packing - M1 & M2 ..... 1 per metal container, 180 container (180 activators) wooden box
  Weight ..... 54.5 lb
  Dimensions ..... 16-3/8 x 16-3/4 x 14-3/4 in.
  Cube ..... 2.34 cu ft
  Hazard class/division and storage compatibility group 1.1B
  UNO serial number 0106
  UNO Proper shipping name ..... Fuzes, detonating

DOT shipping class ..... Class A Explosive
DOT marking ..... DETONATING FUZES, HANDLE CAREFULLY, DO NOT STORE OR LOAD WITH ANY HIGH EXPLOSIVE

DODAC:
M1 ..... 1345-K001
M2 ..... 1345-K003

Painting:
M1:
Early ..... Black
Current ..... Olive Drab
M2 ..... Olive Drab
Marking ..... Yellow/White

Explosive Data:

Item	Type	Weight AV	Weight Metric
M1 Activator:			
M31			
Detonator	Igniter mix	2.32 gr	150 mg
	Lead azide	3.86 gr	250 mg
	Tetryl	4.12 gr	270 mg
Booster	Tetryl	36 gr	2.3 mg
M2 Activator:			
M31A1			
Detonator	Igniter mix	2.32 gr	150 mg
	Lead azide	3.86 gr	250 mg
	Tetryl	4.12 gr	270 mg
Booster	RDX	40 gr	2.58 mg

Reference:

TM 9-1345-203-12&P

BURSTER, FIELD, INCENDIARY: M4

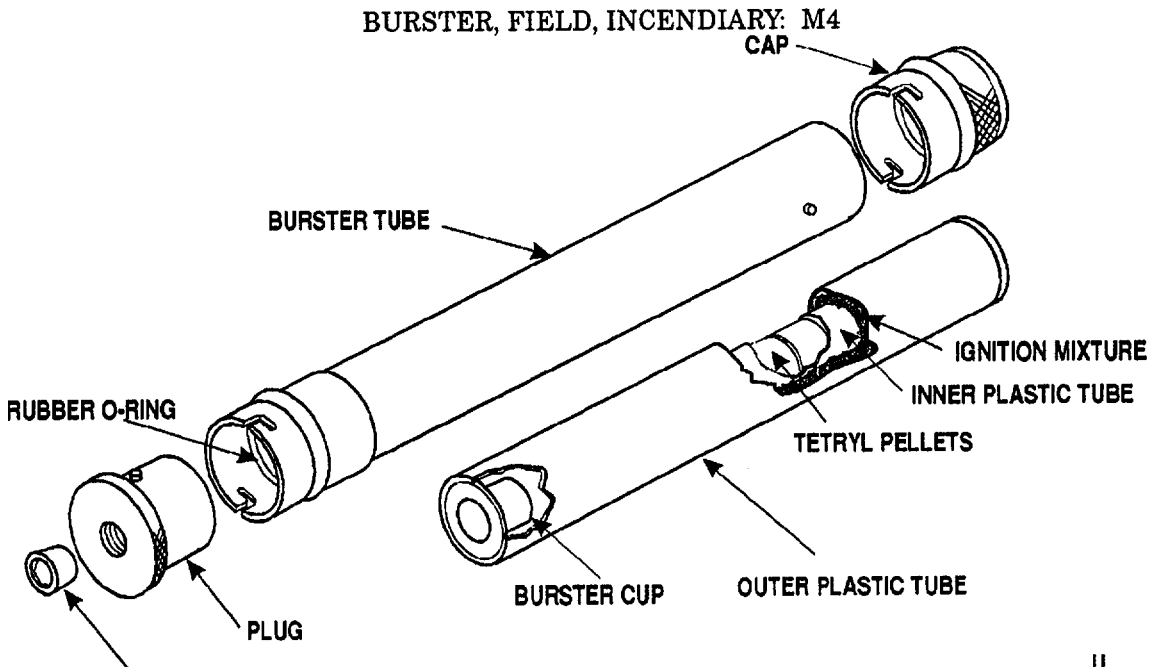

Type Classification:
S 3520 (LCC-A)

Use:

The Burster, Field, Incendiary, M4 is used primarily to ignite field improvised incendiary munitions.

Description:

The M4 Burster is a tubular steel container with a cap at one end and a plug at the other, both secured by bayonet-type locking lugs. A small threaded hole in the plug is closed with a shipping plug and provides an access port for fuzing. A pyrotechnic ignition mixture, tetryl pellets and a burster cup are contained in two concentric plastic tubes preassembled within the steel burster tube. The bayonet-type locking design of the cap and plug permit the joining of two or more of the bursters, as required. Both cap and plug are sealed by means of a preformed packing.

Functioning:

The burster can be initiated by a fuze, blasting cap, detonating cord or any standard booby trap firing device. This initiates the explosive material in the burster cup which detonates the tetryl pellets in the inner tube. The tetryl charge sets off the pyrotechnic mixture in the outer tube bursting the outer case of the M4 Burster.

Tabulated Data:

Model number	M4
Type	Incendiary
Drawings:	
Assembly	D37-4-54
Weight	1.3 lb
Dimensions:	
Length	12 in.
Max diameter	1.75 in.
Material	Steel
Thread	0.563-12NC-Spec
Temperature Limits	Dependent on fuzing type
Shipping and Storage Data:	
Packing	20 per fiber container in wooden box
Weight	50 lb
Dimensions	14-1/2 x 14-7/8 x 10-7/8 in.
Cube	1.36 cu ft
Packing - Supplemental	36 wooden boxes palletized
Weight	2650 lb
Dimensions	49 x 44-1/2 x 43-1/2 in.
Cube	54.4 cu ft

Hazard class/division and storage compatibility group 1.1G
UNO serial number 0043
UNO Proper shipping name ..... Bursters
DOT shipping class..... Class A Explosive
DOT marking ..... BURSTERS (EXPLOSIVE), HANDLE CAREFULLY
DODAC..... 1345-K010
Painting..... Olive Drab
Marking..... Yellow and Black

Explosive Data:

Item	Type	Weight AV	Weight Metric
M4 Burster:			
Explosive	Tetryl	1227 gr	79.65 gm
Incendiary	Igniter mix	0. lb	230 gm

Reference:

TM 9-1345-203-12&P

FUZE, MINE, COMBINATION: M6A1

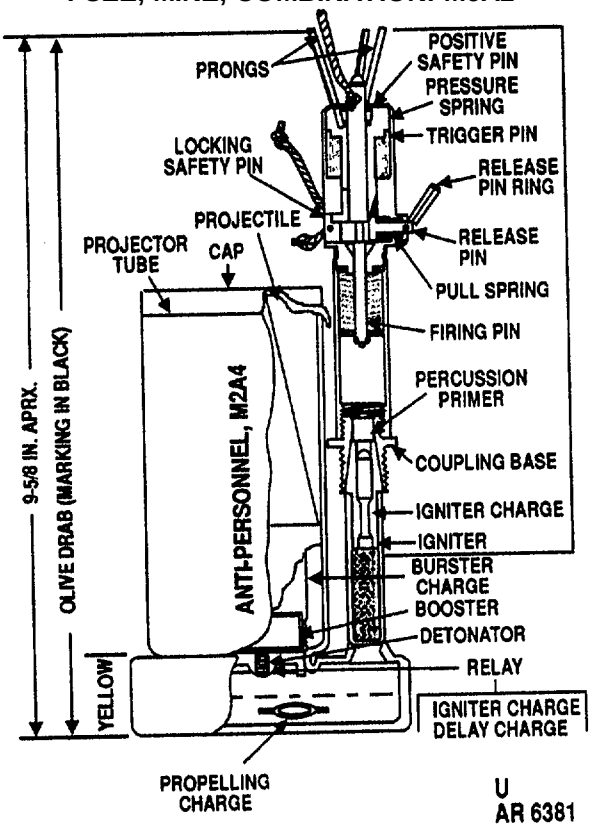

Type Classification:

OBS 11756003

Use:

Fuze M6A1 is used to activate the M2 series of antipersonnel mines.

Description:

Fuze M6A1 is of the combination type, with a three-pronged pressure firing device at the top and a pull wire release-pin ring at the side. The fuze body houses a spring loaded firing pin and a cocking mechanism. The igniter assembly contains a percussion cap primer and a black powder igniter. The firing mechanism consists of a cylindrical metal case containing a trigger pin, a release pin and a firing pin, each fitted with a coil spring. Two safety pins render the fuze safe during shipment and handling. A cotter pin passes through the end of the release pin and bears against the body of the fuze. A second pin, called the safety firing pin, passes through the end of the firing pin that protrudes above the top of the fuze. The base assembly containing the primer and igniter is assembled to the mine as issued and protected by a hexagonal shipping cap. Firing mechanism is packed separately in the mine packing box. Completely assembled fuzes may also be requisitioned separately.

Functioning:

The firing mechanism is activated by a force of 8 to 20 pounds on any of the prongs, or a pull of 3 to 10 pounds on the release pin. Either type of action will cause the firing pin to strike the primer which initiates the igniter charge.

Tabulated Data:

Model number	M6A1
Type	Mechanical combination
Drawings:	
Assembly	73-9-13
Weight	Approx 6 oz
Dimensions:	
Height (incl prongs)	6.62 in.
Max diameter	1.103 in.
Material	Zinc alloy
Thread	0.563-12 UNC-1A

Temperature Limits:
Firing:
Lower..... ..... -40°F
Upper..... ..... + 125°F
Storage:
Lower..... ..... -60°F
Upper..... ..... +160°F
Shipping and Storage Data:
Packing..... ..... 3 fuzes/container, 4 container/water-proof container (48 fuzes) in wooden box
Weight .... 32.8 lb
Dimensions..... ..... 22-5/8 x 10-3/8 x 9-3/8 in.
Cube..... ..... 1.29 cu ft
Hazard class/division and storage compatibility group 1.4D
UNO serial number 0410
UNO Proper shipping name ..... Fuzes, detonating
DOT shipping class..... Class C Explosive
DOT marking ..... PERCUSSION FUZES, HANDLE CAREFULLY
DODAC..... 1345-K053
Painting..... Olive Drab
Explosive Data:

Item	Type	Weight AV	Weight Metric
M6A1 Fuze:			
Perc primer	#3 Western		
Igniter	Blk Pdr	10 gr	648 mg

Reference:

TM 9-1345-203-12&P

FUZE, MINE, COMBINATION: M7A1

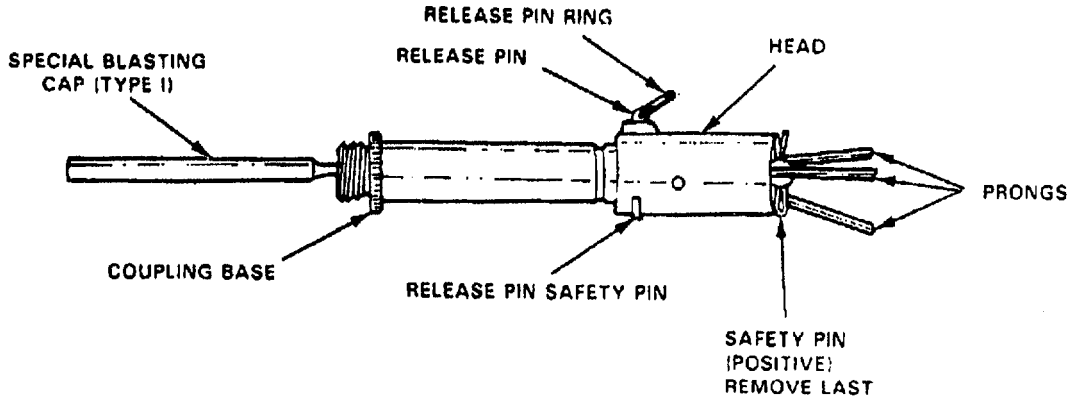

50

Type Classification:

OBS 11756003

Use:

Fuze M7A1 is used to activate the M3 anti-personnel mine.

Description:

Fuze M7A1 is of the combination type, with a three-pronged pressure firing device at the top and a pull wire release-pin ring at the side. The fuze body houses a spring loaded firing pin and a cocking mechanism. The fuze base contains a primer and a crimped-on non-electric blasting cap. The firing mechanism consists of a cylindrical metal case containing a trigger pin, a release pin, and a firing pin, each fitted with a coil spring. Two safety pins render the fuze safe during shipment and handling. A cotter pin passes through the end of the release pin and bears against the body of the fuze. A second pin, called the safety firing pin, passes through the end of the firing pin that protrudes above the top of the fuze. The fuze is shipped as a complete assembly, consisting of a firing mechanism and a primped base, with a crimped-on blasting cap. When supplied with the M3 mine, the fuze is isolated, but packed within the same box. Fuzes are also packed for separate issue.

Functioning:

The firing mechanism is activated by a force of 8 to 20 pounds on any of the prongs or a pull of 3 to 10 pounds on the release pin. Either type of action will cause the firing pin to strike the primer which initiates the non-electric blasting cap.

Tabulated Data:

Model number	M7A1
Type	Mechanical combination
Drawings:	
Assembly	73-9-13-7
Weight	Approx 6 oz
Dimensions:	
Height (incl prongs)	6.37 in.
Max diameter	1.103 in.
Material	Zinc alloy
Thread	0.563-12UNC-1A
Temperature Limits:	
Firing:	
Lower	-40°F
Upper	+ 125°F
Storage:	
Lower	-60°F
Upper	+ 160°F
Shipping and Storage Data:	
Packing	3 fuzes/cardboard carton, 4 carton/ w/waterproof package, 4 package (48 fuzes) wooden box
Weight	33.0 lb
Dimensions	22-5/8 x 10-3/8 x 9-3/8 in.
Cube 1.26 cu ft	
Hazard class/division and storage compatibility group	(04) 1.2D
UNO serial number	0409
UNO Proper shipping name	Fuzes, detonating
DOT shipping class	Class C Explosive
DOT marking	COMBINATION FUZES, HANDLE CAREFULLY
DODAC	1345-K054
Painting	Olive Drab

Explosive Data:

Item	Type	Weight AV	Weight Metric
M7A1 Fuze:			
Perc Primer	#3 Western		
Blasting Cap	Tp I		

Reference:

TM 9-1345-203-12&P

FUZE, MINE, COMBINATION: M10 (M10A1, M10A2)

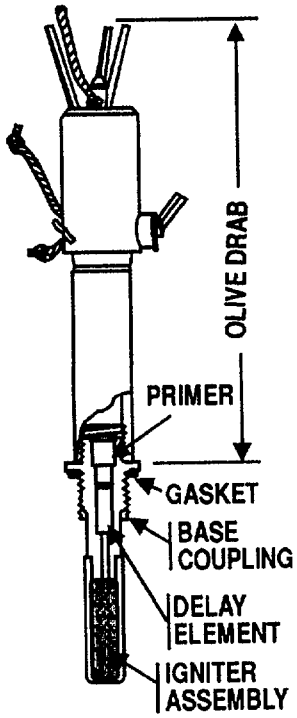

U
AR 100151

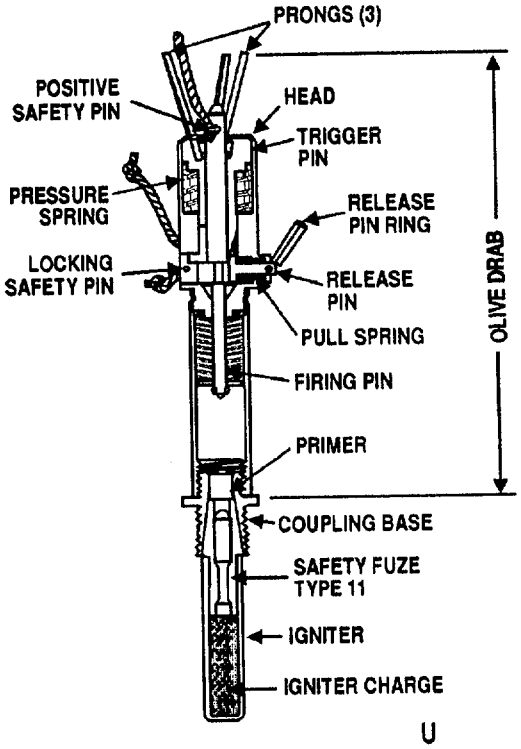

U
AR 100152

Type Classification:

C 6558 (LCC-S)

Use:

Fuze, Mine, Combination, M10 and M1OA1 are used to activate the M8 antipersonnel practice mine. M10A2 is used to activate the M8A1 antipersonnel practice mine.

Description:

The M10 series fuzes are of the combination type with a three-pronged pressure firing device at the top and a pull wire release pin ring at the side. The fuze body houses a spring-loaded firing pin and a cocking mechanism. The base contains a primer and either a length of safety fuze or a delay composition charge. The firing mechanism consists of a cylindrical metal case containing a trigger pin, a release pin, and a firing pin, each fitted with a coil spring. Two safety pins render the fuze safe during shipment and handling. A cotter pin passes through the end of the release pin and bears against the body of the fuze. A second pin, called the safety firing pin, passes through the end of the firing pin that protrudes above the top of the fuze. The fuze igniter assemblies (primers, safety fuses, delays, black powder, or smoke charges) are replaceable. The fuzes may be used many times by replacing the fired igniter assembly and recocking the firing mechanism. All models are packed with the appropriate M8 mine models. The M10A1 fuze is also packed for separate issue.

Difference between models. Fuzes M10 and MlOA1 use a primer to fire a delay safety fuse which ignites 15 grains of black powder. The M10 and M1OA1 fuzes are interchangeable; their principal difference being in the primer. The M39A1 primer used with the M10A1 fuze provides more reliable functioning than the MK5 primer used with the M10 fuze. The M1OA2 fuze uses the M39A1 primer and two delay composition elements to ignite a 725 mg smoke charge.

Functioning:

The firing mechanism is activated by a force of 8 to 20 pounds on any of the prongs or a pull of 3 to 10 pounds on the release pin. Either type of action will cause the firing pin to strike the primer which initiates the delay elements. After 4 to 5 seconds these set off the igniter charge which, in turn, initiates the mine explosive train.

Tabulated Data:

Model numbers M10, M10A1, M10A2
Type ..... Mechanical combination
Drawings:
  Assembly:
    M10 73-9-25
    M10A1 73-9-25
    M10A2 8866643
Weight ..... Approximately 6 oz
Dimensions:
  Height (incl prongs) ..... 6.875 in.
  Maximum diameter ..... 1.103 in.
Material ..... Zinc alloy
Thread 0.563-12UNC-1A
Temperature Limits:
  Firing:
    Lower..... 40°F
    Upper ..... +125°F
  Storage:
    Lower..... -60°F
    Upper ..... +160°F

Shipping and Storage Data:
  Packing (M10A1)..... 4 fuzes/metal container, 60 containers (240 fuzes) in wooden box
  Weight..... 125 lb
  Dimensions ..... 22 x 17-1/8 x 18 in.
  Cube 4.23 cu ft
  Hazard class/division and storage compatibility group ..... (04) 1.2D
  UNO serial number..... 0409
  UNO Proper shipping name ..... Fuzes, detonating
  DOT shipping class ..... Class C Explosive
  DOT marking..... COMBINATION FUZES, HANDLE CAREFULLY
DODAC 1345-K056
Painting ..... Olive Drab

Explosive Data:

Item	Type	Weight AV	Weight Metric
M10 Fuze:			
MK5 primer	Primer mix	0.4 gr	26 mg
4.5-inch delay	Safe fuse		
Igniter	Black powder	14.98 gr	972 mg
M1OA1 Fuze:			
M39A1 primer	Primer mix		0.4 gr
26 mg			
4.5-inch delay	Safe fuse		
Igniter	Black powder	14.98 gr	972 mg
M10A2 Fuze:			
M39A1 primer	Primer mix		0.4 gr
26 mg			
Delay	Type I comp	1.5 gr	100 mg
Delay	Type III comp	10 gr	650 mg
Igniter	Smoke comp	11.2 gr	725 mg

Reference:

TM 9-1345-203-12&P

FUZE. MINE. AT: M603

FUZE, MINE, AT: M603

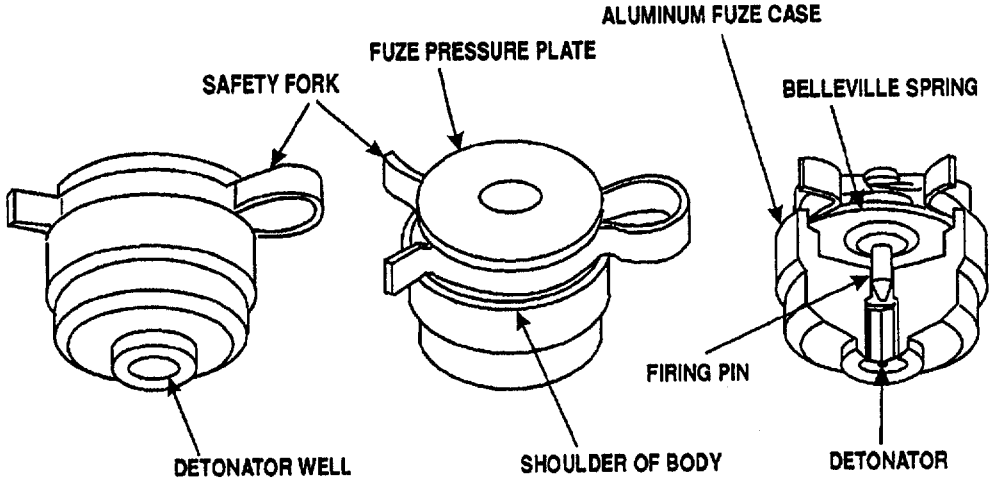

Type Classification:

S 36841 (LCC-A)

Use:

The M603 fuze is an instantaneous mechanical pressure-type fuze and is used with light antitank mine M7A2 and heavy antitank mine M15 and chemical agent mine M23.

Description:

The M603 fuze body contains a firing pin assembly, a cover assembly, a safety fork (clip), and a detonator. The firing pin is actuated by a belleville spring.

Functioning:

A load of 140 to 240 pounds is required to depress the belleville spring and cause it to snap into reverse, driving the firing pin into the detonator. When assembled to the mine M15, a total force of 350 to 750 pounds is needed on the pressure plate to overcome the combined resistance of the belleville springs in the mine and the fuze, and activate the fuze.

Tabulated Data:

Model number M603
Type ..... Antitank
Drawings:
  Assembly..... 73-9-55
Weight ..... 1.56 oz
Dimensions:
  Height..... 1.17 in.
  Max diameter ..... 1.14 in.
Material ..... Aluminum & Steel
Thread ..... None
Temperature Limits:
  Firing:
    Lower..... -40°F
    Upper ..... + 125°F
  Storage:
    Lower..... -60°F
    Upper ..... + 160°F
Shipping and Storage Data:
  Packing ..... 1 fuze in metal container, 180 containers (180 fuzes) in wooden box
  Weight..... 71.6 lb
  Hazard class/division and storage compatibility group 1.4D
  UNO serial number..... 0410
  UNO Proper shipping name ..... Fuzes, detonating
  DOT shipping class ..... Class C Explosive
  DOT marking..... PERCUSSION FUZES, HANDLE CAREFULLY
DODAC 1345-K050
Painting ..... Unpainted
Marking ..... Metal stamped

Explosive Data:

Item	Type	Weight AV	Weight Metric
M45 Detonator	PA #100	1.85 gr	120 mg
	Lead Az	4.24 gr	275 mg
	RDX	1.85 r	120 mg

Reference:

TM 9-1345-203-12&P

THIS PAGE INTENTIONALLY LEFT BLANK

FUZE, MINE, COMBINATION: M605

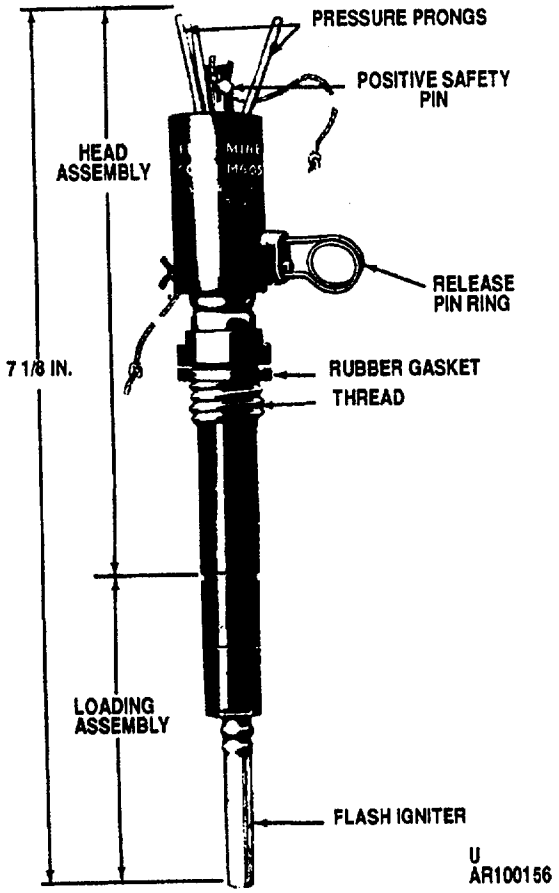

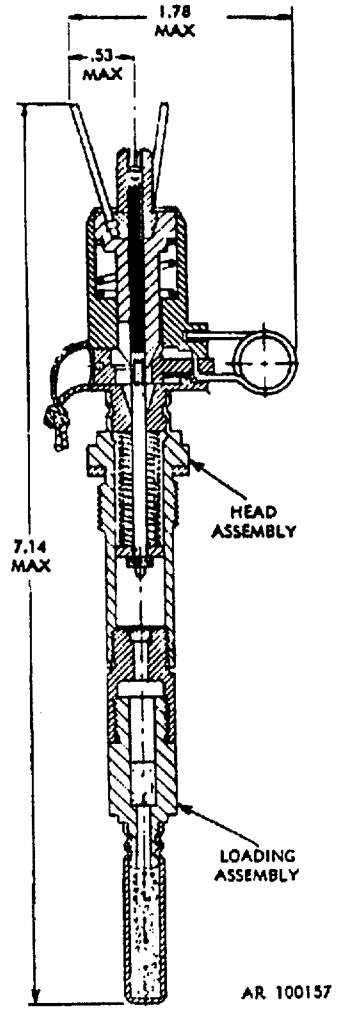

Type Classification:

S 34783 (LCC-A)

Use:

The M605 fuze is used with the M16 series antipersonnel mines.

Description:

The M605 fuze is of the combination type, with a three-pronged pressure firing mechanism at the top and a pull wire release pin ring at the side. The firing mechanism is housed in a cylindrical, metal case which contains the cocking mechanism and a trigger pin, a release pin, and a firing pin, each fitted with a coil spring. The base or loading assembly contains a primer, a delay charge, a relay charge, and an igniter charge. Two safety pins render the fuze safe during shipment and handling. A cotter pin passes through the end of the release pin and bears against the body of the fuze. A second cotter pin passes through the end of the firing pin, between the prongs. An interlocking pin between the safety pins provides additional safety. Fuzes are shipped with the M16 mines or as separate issue. A hexagonal shipping plug closes the fuze well of the mine. A fuzing wrench M25 is issued with the mine.

Functioning:

The M605 fuze is functioned either by a 3 to 15 pound pull on a trip wire or a force of 8 to 45 pounds on one or more of the prongs protruding from the top of the fuze. This pull, or push, releases the firing pin which strikes the primer, igniting the delay charge. The delay allows

time for persons stepping on prongs to move from directly above the mine, where their presence might inhibit the proper functioning of the mine. The delay charge ignites the relay charge which, in turn, sets off the flash igniter charge. This charge ignites the expelling charge, the first element of the mine firing train.

Tabulated Data:

Model number M605
Type ..... Combination
Drawings:
  Assembly..... 7548284
Weight ..... 6 oz
Dimensions:
  Height..... 7.125 in.
  Max diameter ..... 1.75 in.
Material ..... Zinc alloy
Thread 0.625-11UNC-1A
Temperature Limits:
  Firing:
    Lower..... -40°F
    Upper ..... + 125°F
  Storage:
    Lower..... -60°F
    Upper ..... +160°F
Shipping and Storage Data:
  Packing ..... 4 fuzes/metal box, 60 boxes (240 fuzes) in wooden box
  Weight..... 125 lb
  Dimensions ..... 22 x 17-1/8 x 18 in.
  Cube ..... 4.09 cu ft
  Hazard class/division and storage compatibility group..... 1.4D
  UNO serial number..... 0410
  UNO Proper shipping name ..... Fuzes, detonating
  DOT shipping class ..... Class C Explosive
  DOT marking..... COMBINATION FUZES, HANDLE CAREFULLY
DODAC 1345-K058
Painting ..... Olive Drab
Marking ..... Yellow

Explosive Data:

Item	Type	Weight AV	Weight Metric
M605 Fuze:			
M42 Prim	PA-101	0.34 gr	22 mg
Delay	Tp II Comp	7.3 gr	475 mg
Flash Ign	A5 Blk Pdr	10 gr	648 mg

Reference:

TM 9-1345-203-12&P

FUZE, MINE, ANTITANK, NONMETALLIC: M606

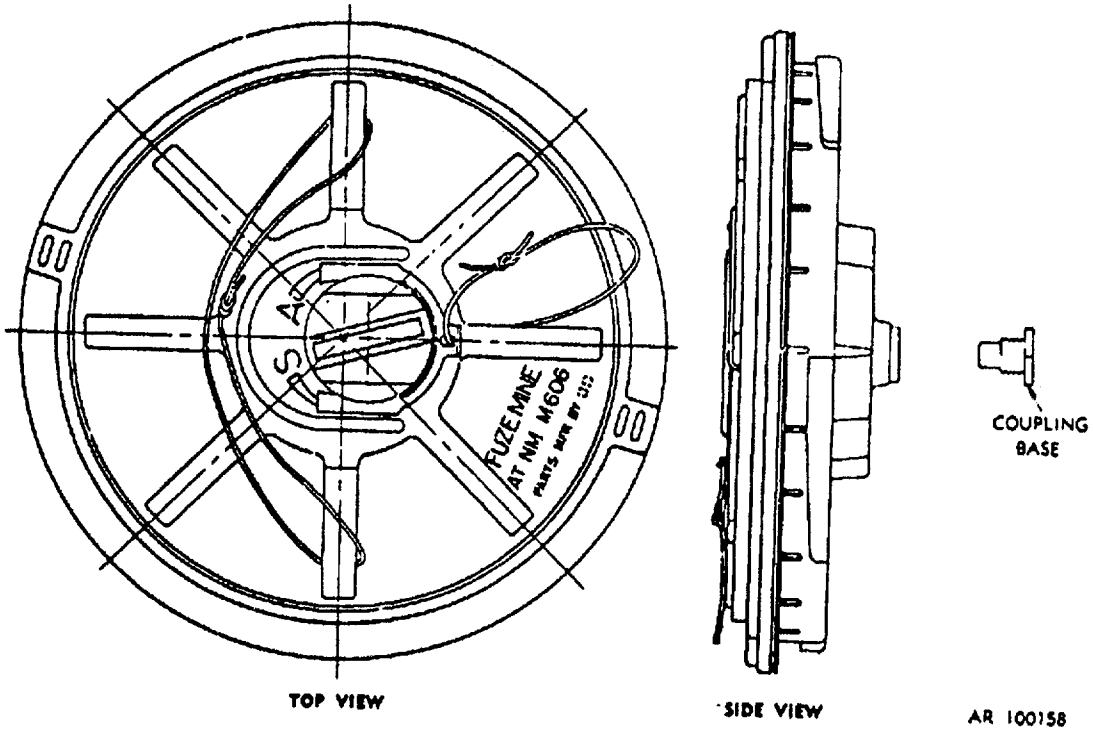

Type Classification:

S 37119 (LCC-A)

Use:

Fuze M606 is a mechanical pressure-type and is used to initiate M19 nonmetallic antitank mine.

Description:

Fuze M606 is a flat, round disk, constructed of plastic material to avoid discovery by magnetic mine detectors. The fuze body contains a pressure plate, two belleville springs, a setting knob, a step plate, a firing pin assembly, and a detonator holder assembly.

Functioning:

After the safety clip has been removed and the setting knob turned to the armed position, a force of 300 to 500 pounds on the pressure plate will depress the upper belleville spring, and cause the lower spring to snap into reverse, driving the firing pin into the detonator.

Tabulated Data:

Model number M606
Type ..... AT, NM
Drawings:
  Assembly..... 9220396
Weight ..... 2.43 lb
Dimensions:
  Height..... 2.7 in.
  Max diameter ..... 10 in.
Material ..... Plastic
Thread:
  Fuze body ..... None
  Detonator holder assy..... 0.563-12 UNC-1A
Temperature Limits:
  Firing:
    Lower..... -40°F
    Upper ..... + 125°F
  Storage:
    Lower..... -60°F
    Upper ..... +160°F

Shipping and Storage Data:
- Packing ..... Not separate issue-packed w/M19 mine
- Hazard class/division and storage compatibility group 1.1D
- UNO serial number..... 0137
- UNO Proper shipping name ..... Mines
- DOT shipping class ..... Class A Explosive
- DOT marking..... EXPLOSIVE MINES

DODAC 1345-K250

Painting ..... Olive Drab

Marking ..... White

Explosive Data:

Item	Type	Weight AV	Weight Metric
M606 Fuze:			
M50 Det	PA #100	1.62 gr	105 mg
	Lead Az	3.85 gr	250 mg
	RDX	7.85 gr	510 mg

Reference:

TM 9-1345-203-12&P

FUZE, MINE, ANTITANK: M607

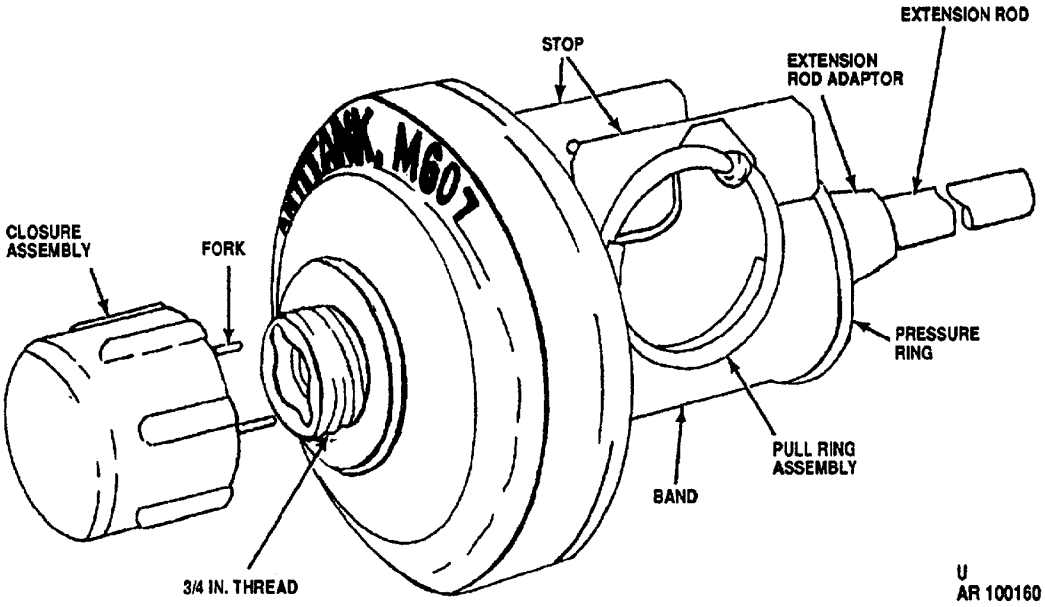

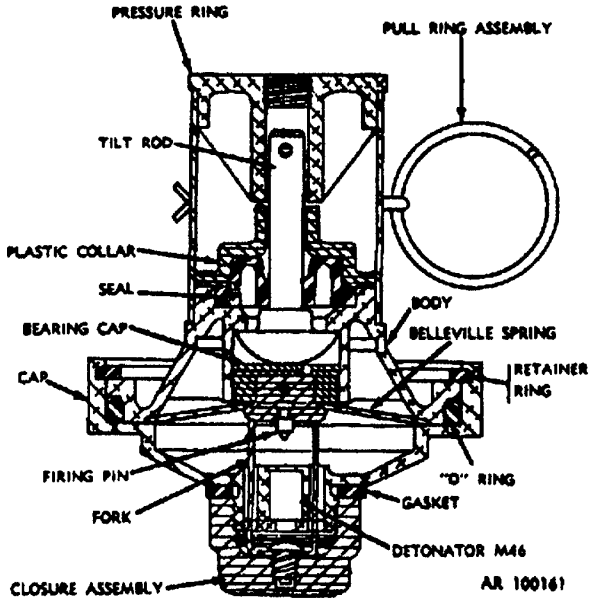

Type Classification:

S 37246 (LCC-A)

Use:

Fuze M607 is used with antitank mine M21.

Description:

The M607 fuze incorporates a belleville spring-loaded firing pin, a tilt rod, a pressure ring, and a frangible plastic collar. The base is threaded to fit the mine and is shipped with a closure assembly screwed in place for protection. Fuze wrench M26 fits the closure assembly. A safety band and strap prevents movement of the fuze pressure ring. This is secured with a cotter pin.

Functioning:

Fuze M607 is a pressure type fuze that can also be activated by side thrust loads, when so adapted, by the addition of an extension rod.

The plastic collar within the fuze is designed to shatter under vertical loading of the pressure ring, or from side load effects on the tilt rod. A 290 pound vertical load with 1/8-inch travel, or a horizontal force on the tilt rod greater than 3.75 pounds acting through approximately 20 degrees, is required to shatter the plastic collar. Once the collar is broken, continuing force from either source will be transmitted through the tilt rod to the belleville spring, which will drive the firing pin into the M46 detonator. This, in turn, will function the mine.

Tabulated Data:

Model number M607
Type ..... Mech, AT
Drawings:
  Assembly..... 8833783
Weight ..... 8 oz
Dimensions:
  Height..... 4 in.
  Max diameter ..... 2.8 in.
Material Aluminum
Thread size 0.75-12NS-2A
Temperature Limits:
  Firing:
    Lower..... -40°F
    Upper ..... + 125°F
  Storage:
    Lower..... -60°F
    Upper ..... +160°F
Shipping and Storage Data:
  Packing ..... Packed with M21 AT Mine (not issued as separate item)
  Hazard class/division and storage compatibility group 1.1D
  UNO serial number..... 0137
  UNO Proper shipping name ..... Mines
  DOT shipping class ..... Class A Explosive
  DOT marking..... EXPLOSIVE
  ..... MINES
DODAC 1345-K181
Painting ..... Olive Drab
Marking ..... Yellow

Explosive Data:

Item	Type	Weight AV	Weight Metric
M46 Det	NOL #130	1.62 gr	105 mg
	Lead Az	4.31 gr	280 mg
	RDX	2.24 gr	145 mg

Reference:

TM 9-1345-203-12&P

FUZE, MINE, ANTITANK: M608

FUZE, MINE, ANTITANK: M608

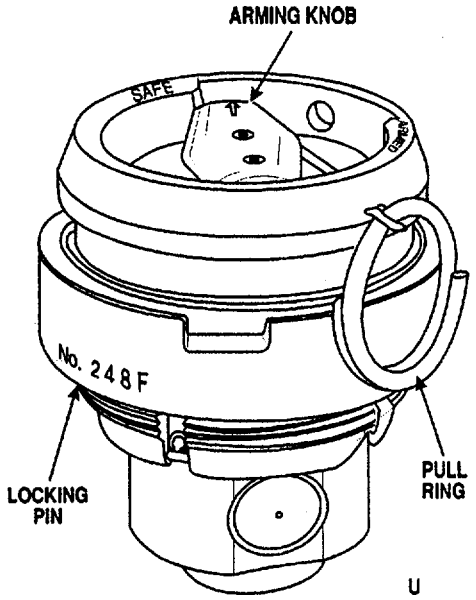

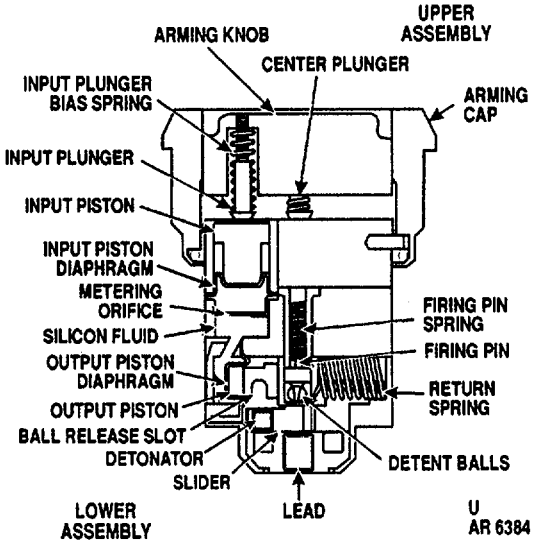

Type Classification:

S 5736 (LCC-A)
(Has not been produced and is not fielded)

Use:

Fuze M608 is a direct contact, pressure-actuated fuze, containing a delay feature to provide resistance to blast-type countermeasures. It is used with antitank mine M6A2 and M15, and with chemical agent mine M23. It is suitable for use on land or in water, in temperate or tropical environments.

Description:

The fuze is constructed primarily of aluminum and stainless steel and consists of a fuze assembly with an integral arming cap. The fuze utilizes an out-of-line detonator system for safety and a hydraulic system to provide the delay. A spring-loaded firing pin, an M55 detonator, and a lead charge comprise the firing train. The fuze is threaded into the mine fuze well and secured by tightening the locking ring. The fuze is armed by removing the pull pin which allows the arming knob to be rotated from Safe to Armed position. This rotation alines the input plunger with the input piston, and allows the actuating load to be transferred to the firing mechanism.

Functioning:

A load of 300-600 pounds applied for 250-450 milliseconds is required to function the M608 fuze, when assembled to the M15 mine.

Tabulated Data:

Model number M608
Type ..... Antitank
Drawings:
  Assembly..... 9204009
Weight ..... 1 lb
Dimensions:
  Height..... 3.5 in.
  Max diameter ..... 3.25 in.
Material ..... Aluminum
Thread 2.313-14NS
Temperature Limits:
  Firing:
    Lower..... -40°F
    Upper ..... + 125°F
  Storage:
    Lower..... -60°F
    Upper ..... + 160°F

Shipping and Storage Data:

Packing	1 fuze/carton in barrier bag. 45 bags (45 fuzes) in wooden box
Weight	64 lb
Dimensions	23-5/8 x 15 x 14 in.
Cube	2.9 cu ft
Hazard class/division and storage compatibility group	1.4D
UNO serial number	0410
UNO Proper shipping name	Fuzes, detonating
DOT shipping class	Class C Explosive
DOT marking	PERCUSSION FUZES, HANDLE CAREFULLY
DODAC	1345-K061
Painting	Olive Drab
Marking	White

Reference:

TM 9-1345-203-12&P

FUZE, MINE: M624

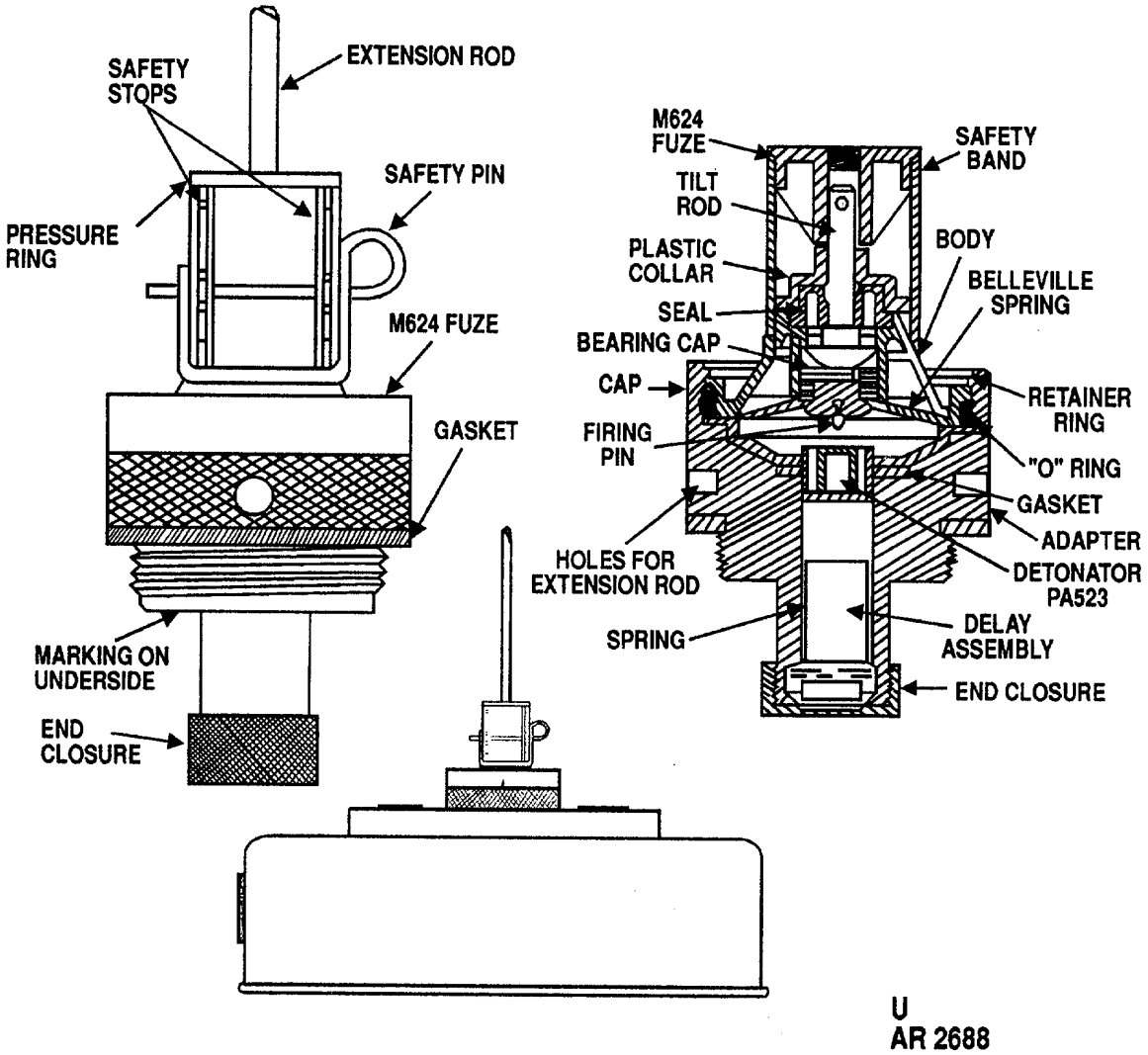

Type Classification:

Not available (LCC-A)

Use:

Fuze M624 is used with Antitank Mine M15.

Description:

The M624 fuze consists of the M607 fuze connected to an adaptor which is loaded with a delay element. The adaptor is designed to screw into the mine fuze well. The M624 fuze incorporates a belleville spring-loaded firing pin, a tilt rod, a pressure ring, and a frangible plastic collar. A safety band and stop prevents movement of the fuze pressure ring. This is secured with a safety pin.

Functioning:

Fuze M624 is a pressure type fuze that can also be activated by side thrust loads, when so adapted, by the addition of an extension rod. The plastic collar within the fuze is designed to shatter under vertical loading of the pressure ring, or from side load effects on the tilt rod. A 290 pound vertical load with 1/8-inch travel, or a horizontal force on the tilt rod greater than 3.75 pounds acting through approximately 20 degrees, is required to shatter the plastic collar. Once the collar is broken, continuing force from either source will be transmitted through the tilt rod to the belleville spring, which will drive the firing pin into the PA523 detonator. This will activate the delay element which in turn will initiate the mine.

Tabulated Data:

Model number M624
Type ..... Mech, AT
Drawings:
Assembly..... 12546032
Weight ..... 1.0 lb
Dimensions:
Height..... 4.7 in.
Max diameter ..... 2.83 in.
Length of extension rod ..... 24.4 in.
Material ..... Aluminum alloy
Thread Size 2.3125-14 UNS-1A
Temperature Limits:
Operational:
Lower..... -40℃ (-400F)
Upper ..... +52℃ (+ 1250F)
Storage:
Lower..... -51℃ (-600F)
Upper ..... +71℃ (+1600F)
Shipping and Storage Data:
Packing ..... One fuze per fiber board sleeve, 3 fiber board sleeves per M19A1 metal container, four M19A1 containers per wirebound box. Three extension rod pieces (1 rod) placed in a foil bag, 3 foil bags put on top of the 3 fuzes in each M19A1 metal container. There are a total of 12 fuzes and 12 three piece extension rods per wirebound box.
Packing box:
Weight..... 42 lb
Dimensions (in.) ..... 17-3/8 x 11-1/2 x 8-1/8
Cube ..... 1.0 cu ft
Drawing number 5581378
Hazard class/division..... 1.4
Storage compatibility group ..... S
DOT shipping class C
DOT designation ..... DETONATING FUZES, CLASS C EXPLOSIVE, HANDLE CAREFULLY
DODAC 1345-K068
UNO serial number 0367
UNO Proper shipping name ..... Fuzes, detonating
Painting:
M607 fuze ..... Olive drab
Adaptor ..... Anodized black
Marking ..... Yellow

Explosive Data:

Item	Type	Weight AV	Weight Metric
Fuze, Mine: M624			
PA523 Detonator:			
Primer	Prim Mix		92 mg
Intermediate Charge	Lead Az		248 to 280 mg
Lower Charge	RDX		145 mg
Delay Element:			
M42 Primer	PA-101 Primer comp	0.31 to 0.35 gr	
Delay Comp	Barium Chromate		630 mg
	Boron		70 mg
Relay	Lead Az		300 mg
	RDX		275 mg

Reference:

TM 9-1345-203-12&P
TM 9-1345-203-34&P

CHAPTER 7

PROJECTILES WITH ANTITANK MINES

THIS PAGE INTENTIONALLY LEFT BLANK

PROJECTILE, 155 MILLIMETER: AT, M718 AND M718A1 WITH ANTITANK MINES

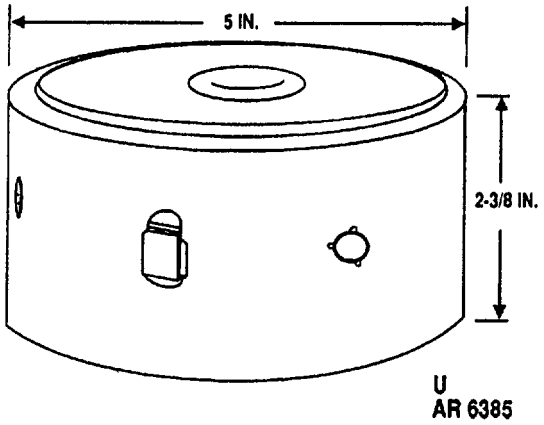

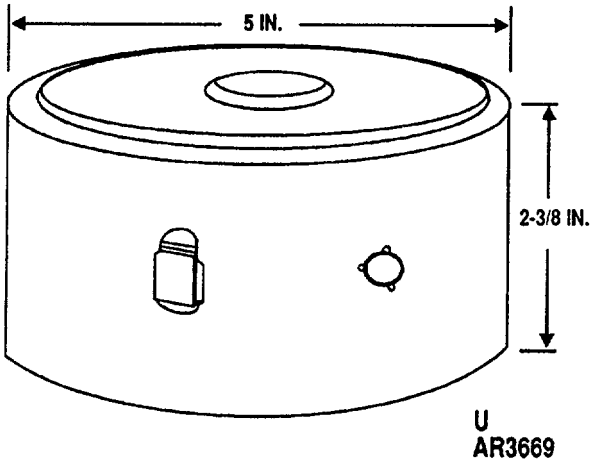

Type Classification:

M718 - Standard, Logistic Control Code A
M718A1 - Standard, Logistic Control Code A
MSR 04866010

Use:

These projectiles are used to deliver antitank mines in front of enemy armored forces to deny/delay access to a particular area for a specific time period. The "L" means "Long" for the long time until mine self-destructs (48 hours, nominal).

Description:

The projectiles are of the separate loading type (the fuzes, propelling charges, and primers are handled separately). The projectiles are shipped from the loading plant with fusible lifting plugs to facilitate handling, and as a safety measure. Before firing, the lifting plugs must be replaced with M577 series, MTSQ fuzes. The projectiles contain a payload of antitank mines that are ejected during projectile flight by an expulsion charge. The rotating bands are protected from damage during transportation and handling by plastic grommets.

Functioning:

When the projectile is fired, the primer ignites the propelling charge which propels the round to the target area. The MTSQ fuze functions at its pre-set time setting, initiating the expulsion charge, which ejects the mines from the projectile. The mines (having been subjected to the required set-back, rotational, and set-forward forces) are armed immediately or soon after coming to rest on the ground, depending upon projectile model. Upon sensing the proximity of tanks, the mines initiate. If the mines are not initiated during their intended life span, a circuit is activated causing the mines to self-destruct. A percentage of the mines in each projectile has an antidisturbance mechanism to discourage -attempts at mine field clearing.

Difference Between Models:

The arming time of the mines in Projectile M718A1 is "INSTANTANEOUS" after impact. This achieves the capability of using the mines tactically in combat operations. The arming time of the mines in Projectile M718 Carriers is 58 seconds nominal. Deployment is for the lay- ing of mine fields for denying access to critical areas. These projectiles will not be resupplied when current assets are no longer available.

Tabulated Data:

Projectile:
- Type Antitank (AT)
- Weight..... 103 lb with fuze
- Length (with lifting plug) ..... 33.9 in.
- Body material ..... Forged steel
- Color ..... Olive drab with yel- ..... low markings
- Marking drawing ..... 9277852 (M718) ..... 11786215 ..... (M718A1)

Filler and Weight:
- Number of mines 9
- Explosive ..... PBX 0280 (95% ..... RDX, 5% Estane)
- Explosive weight/mine ..... 1.26 lb
- Expulsion charge ..... M10 propellant ..... (58.0 ±1 gr)

Mines:
- Air drop time ..... 8 sec (nominal)
- Antidisturbance mixture ..... 2 mines (randomly ..... positioned in each ..... projectile)
- Self-destruct time ..... 48 hr (nominal)

Components:
- Propelling charges ..... M3A1, M4A2, ... M119, M119A1, ... M119A2
- Primers..... MK2A4, M82
- Fuze MTSQ, M577

Temperature Limits:
- Firing:
  - Upper limit ..... -25°F (-32C)
  - Lower limit ..... +145F (+63C)
- Storage:
  - Lower limit ..... -60°F (-51C)
  - Upper limit ..... +160°F (+71°C)

Packing Data..... This mine is not ..... available as a sup- ..... ply item. See sup- ..... ply catalog, 155mm ..... Projectile, AT: ..... M718 and M718A1.

Shipping and Storage Data:
- Hazard class/division and storage compatibility group 1.1D
- UNO serial number 0168
- UNO Proper shipping name ..... Projectiles
- DODAC ..... 1320-D503 (M718) ..... 1320-D515 ..... (M718A1)

References:

TM 9-1025-200-12
TM 9-1025-211-10
TM 9-1300-251-20
TM 9-1300-251-34
TM 9-2350-311-10
TM 9-2350-314-10

PROJECTILE, 155 MILLIMETER: AT, M741 AND M741A1 WITH ANTITANK MINES

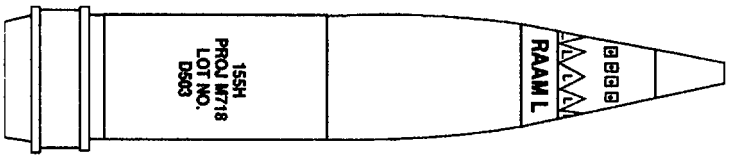

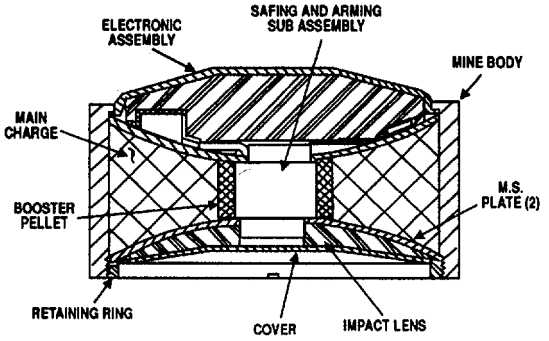

U
AR 6386

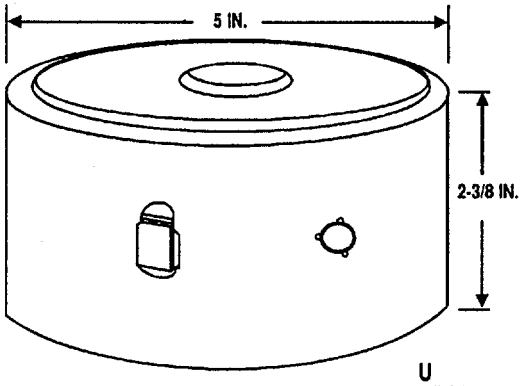

U
AR3669

Type Classification:

M741 - Standard, Logistic Control Code A
M741A1 - Standard, Logistic Control Code A
MSR 04866010

Use:

These projectiles are used to deliver antitank mines in front of enemy armored forces to deny/delay access to a particular area for a specific time period. The "S" means "Short" for the short time until mine self-destructs (4 hours, nominal).

Description:

The projectiles are of the separate loading type (the fuzes, propelling charges, and primers are handled separately). The projectiles are shipped from the loading plant with fusible lifting plugs to facilitate handling, and as a safety measure. Before firing, the lifting plugs must be replaced with M577 series, MTSQ fuzes. The projectiles contain a payload of antitank mines that are ejected during projectile flight by an expulsion charge. The rotating bands are protected from damage during transportation and handling by plastic grommets.

Functioning:

When the projectile is fired, the primer ignites the propelling charge which propels the round to the target area. The MTSQ fuze functions at its pre-set time setting, initiating the expulsion charge, which ejects the mines from the projectile. The mines (having been subjected to the required set-back, rotational, and

set-forward forces) are armed immediately or soon after coming to rest on the ground, depending upon projectile model. Upon sensing the proximity of tanks, the mines .initiate. If the mines are not initiated during their intended life span, a circuit is activated causing the mines to 'self-destruct. A percentage of the mines in each projectile has an antidisturbance mechanism to discourage attempts at mine field clearing.

Difference Between Models:

The arming time of the mines in Projectile M741A1 is "INSTANTANEOUS" after impact. This achieves the capability of using the mines tactically in combat operations. The arming time of the mines in Projectile M741 Carriers is 58 seconds nominal. Deployment is for the laying of mine fields for denying access to critical areas. These projectiles will not be resupplied when current assets are no longer available.

Tabulated Data:

Projectile:
- Type ..... Antitank (AT)
- Weight..... 103 lb with fuze
- Length (with lifting plug) ..... 33.9 in.
- Body material ..... Forged steel
- Color Olive drab with yellow markings
- Marking drawing 9278014 (M741) 11786240 (M741A1)

Filler and Weight:
- Number of mines 9
- Explosive ..... PBX 0280 (95% RDX, 5% Estane)
- Explosive weight/mine ..... 1.26 lb
- Expulsion charge ..... M10 propellant (58.0 + 1 gr)

Mines:
- Air drop time ..... 8 sec (nominal)
- Antidisturbance mixture ..... 2 mines (randomly positioned in each projectile)
- Self-destruct time ..... 4 hr (nominal) ("Short" time - SD mines)

Components:
- Propelling charges..... M3A1, M4A2, M119, M119A1, M119A2
- Primers..... MK2A4, M82
- Fuze MTSQ, M577

Temperature Limits:
- Firing:
  - Upper limit ..... -25°F (-32C)
  - Lower limit ..... + 145°F (+63°C)
- Storage:
  - Lower limit ..... -60°F (-51C)
  - Upper limit ..... +160°F (+71C)

Packing Data..... This mine is not available as a supply item. See supply catalog, 155mm Projectile, AT: M741 and M741A1.

Shipping and Storage Data:
- Hazard class/division and storage compatibility group 1.1D
- UNO serial number..... 0168
- UNO Proper shipping name ..... Projectiles
- DODAC 1320-D509 (M741) 1320-D514 (M741A1)

References:

TM 9-1025-200-12
TM 9-1025-211-10
TM 9-1300-251-20
TM 9-1300-251-34
TM 9-2350-311-10
TM 9-2350-314-10

CHAPTER 8

MINE CANISTERS

THIS PAGE INTENTIONALLY LEFT BLANK

CANISTER, MINE: M87

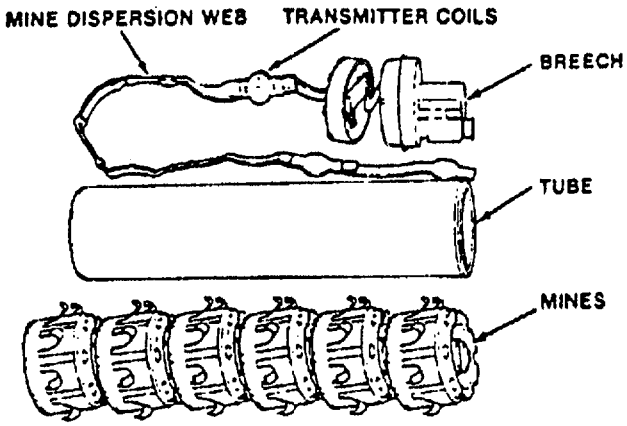

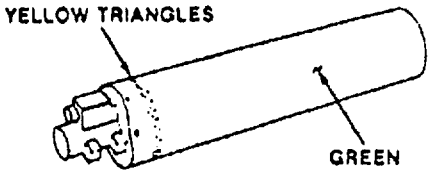

U
AR 4335

Type Classification:

Standard Jan. 89

Use:

The M87 mine canister is used with the M139 mine dispenser (VOLCANO) to lay a mine field.

Description:

The M87 mine canister is an expendable item consisting of an aluminum tube and breech assembly containing five antitank mines and one antipersonnel mine. Also housed in the canister are six transmitter coils, attached to a dispersion strap, and a propulsion system. The propulsion system consists of a self-contained electrically initiated primer, and a pressure cartridge assembly containing the launching propellant. The canister is painted in green and has one colored band of yellow triangles near the breech.

Functioning:

When an electrical pulse is received, the electric primer initiates the pressure cartridge expelling a mine stack from the canister. The stack consists of five antitank mines and one anti-personnel mine. An interfaced web provides dispersion, self-destruct, and arm signals, set from the dispenser control unit to the mines.

Tabulated Data:

Canister, Mine: M87:
- Length ..... 24.09 in.
- Diameter ..... 5.0 in.
- Weight (loaded with 5 AT and 1 AP mines) ..... 13.62 kg (30.0 lb)
- Color ..... Forest Green No. 34079
- Marking ..... Yellow, Black
- Contents:
  - AT mine 5
  - AP mine 1
  - Pressure cartridge 1
  - Electrical primer 1

Explosives:

AT Mine (Each):
- RDX estane ..... 0.59 kg (1.3 lb)
- PBXN-5 ..... 13.6 g (0.03 lb)
- Lead styphnate ..... 9 mg
- RD 1333 lead azide ..... 28 mg
- Boron borochromate ..... 10 mg
- HMX ..... 32 mg
- M5 propellant ..... 1.5 g
- Barium styphnate and KDNBF 50/50 mixture ..... 5.2 mg

AP Mine (Each):
- Comp B-4 ..... 400.00g
- Comp A-5 ..... 6.28 g

PBXN-5 ..... 4.60 g
Lead styphnate..... 0.8 mg
RD 1333 lead azide..... 14 mg
HMX ..... 16 mg
M5 propellant ..... 1.5 g
Barium styphnate and
KDNBF 50/50
mixture ..... 5.2 mg
Pressure Cartridge:
Propellant M1 type I ..... 4.8 g
Propellant, black
powder..... 1.0 g
Lead styphnate..... 62 mg
Electric Primer:
Boron potassium
perchlorate ..... 10 mg
Titanium potassium
perchlorate ..... 25 mg
Mine Canister (Each):
RDX estane..... 2.95 kg (6.5 lb)
PBXN-5 ..... 72.60 g (0.16 lb)
Comp B-4 ..... 400.00 g
Comp A-5 ..... 6.28 g
Lead styphnate..... 108 mg
Boron borochromate..... 50 mg
HMX 176 mg
M5 propellant ..... 9 g
Barium styphnate and
KDNBF 50/50
mixture ..... 31 mg
Propellant M1 type I ..... 4.8 g
Propellant, black
powder..... 1.0 mg
Boron potassium
perchlorate ..... 10 mg
Titanium potassium
perchlorate ..... 25 mg
RD 1333 Lead azide..... 154 mg
Temperature Limits:
Operational:
Minimum ..... -37°C (-35°F)
Maximum ..... +63°C (+145F)
Storage:
Minimum ..... -53°C (-650F)
Maximum ..... +71°C (+160F)
Shipping and Storage Container:
(Metal Tube Type):
Length..... 149.86 cm (59.0 in.)
Diameter ..... 17.27 in. (6.8 in.)
Weight (empty)..... 11.34 kg (25.0 lb)
Weight (packed with 2
mine canisters) ..... 39.95 kg (88.0 lb)
Palletization (Metal Pallet):
Pallet size..... 71.8 x 149.9 cm
(28-1/4 x 59.0 in.)
Pallet weight (empty)..... 63.5 kg (140. lb)
Pallet configuration
(tubes)..... 4 across x 5 high =
..... 20 tubes
Pallet height ..... 99.1 cm (39.0 in.)
Pallet cube ..... 1.07 cu m
..... (37.6 cu ft)
Pallet weight (loaded)..... 852.6 kg
(1,900.0 lb)
Shipping and Storage Data:
DOD hazard class 1.1
DOD compatibility
group..... D
DOD hazard class ..... Class A Explosive
DOT container marking ..... EXPLOSIVE
MINES
US Coast Guard
Classification ..... X-A
Shelf life ..... Indefinite
DODAC..... 1345-K045
NSN 1345-01-233-2029
UNO serial number..... UN0137
UNO Proper shipping
name ..... Mines

References:

TM 9-1095-208-10
TM 9-1345-203-12&P
TM 9-1345-203-34&P

CANISTER, MINE: M87A1

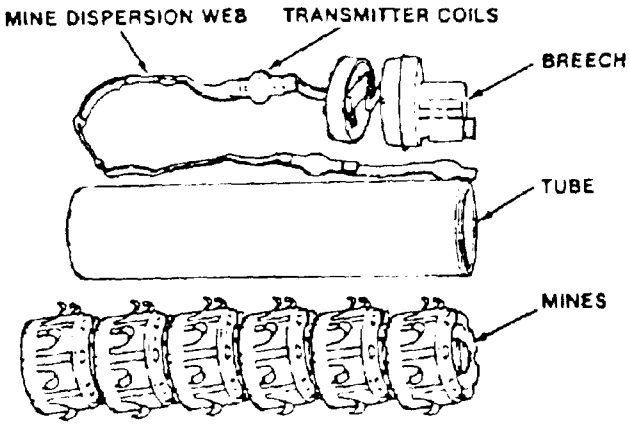

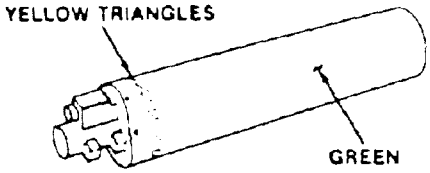

U
AR 4335

Type Classification:

Standard.

Use:

The M87A1 mine canister is used with the M139 mine dispenser (VOLCANO) to lay a mine field.

Description:

The M87A1 mine canister is an expendable item consisting of an aluminum tube and breech assembly containing six antitank mines. Also, the canister contains six transmitter coils, attached to a dispersion strap, and a propulsion system. The propulsion system consists of a self-contained electrically initiated primer, and a pressure cartridge assembly containing the launching propellant. The canister is painted in green and has one colored bank of yellow triangles near the breech.

Functioning:

When an electrical pulse is received, the electric primer initiates the pressure cartridge expelling a mine stack from the canister. The stack consists of five antitank mines and one antipersonnel mine. An interfaced web provides dispersion, self-destruct and arm signals, set from the dispenser control unit to the mines.

Tabulated Data:

Canister, Mine: M87A1:

Length	24.09 in.
Diameter	5.0 in.
Weight (loaded with 6 AT mines)	13.62 kg (30.0 lb)
Color	Forest Green No. 34079
Marking	Yellow, Black
Contents:	
AT mine	6
Pressure cartridge	1
Electrical primer	1

Explosives:

AT Mine (Each):

RDX estane	0.59 kg (1.3 lb)
PBXN-5	13.6 g (0.03 lb)
Lead styphnate	9 mg
RD 1333 lead azide	28 mg
Boron borochromate	13 mg
HMX	32 mg
M5 propellant	1.5 g
Barium styphnate and KDNBF 50/50 mixture	5.2 mg

Pressure Cartridge:
- Propellant M1 type I ..... 4.8 g
- Propellant, black powder..... ..... 1.0 g
- Lead styphnate ..... 62 mg

Electric Primer:
- Boron potassium perchlorate..... 10 mg
- Titanium potassium perchlorate..... 25 mg

M87A1 mine canister (Each):
- RDX estane..... .. 3.54 kg
- PBXN-5..... ..... 81.6 g
- Lead styphnate ..... 116.0 mg
- Boron borochromate ..... 60.0 mg
- HMX .... 192.0 mg
- M5 propellant..... 9.0 g
- Barium styphnate and KDNBF 50/50 mixture .... 31.2 mg
- Propellant M1, type..... 4.8 g
- Propellant, black powder..... 1.0 mg
- Boron potassium perchlorate..... 10.0 mg
- Titanium potassium perchlorate..... 25.0 mg
- RD 1333 lead azide..... 168.0 mg

Temperature Limits:
- Operational:
  - Minimum..... ... -37°C (-35°F)
  - Maximum..... .. +63°C (+145°F)
- Storage:
  - Minimum..... ... -53°C (-65°F)
  - Maximum..... .. +71°C (+160°F)

Shipping and Storage Container:
- (Metal Tube Type):
- Length..... ..... 149.86 cm (59.0 in.)
- Diameter..... ..... 17.27 in. (6.8 in.)
- Weight (empty) ..... 11.34 kg (25.0 lb)
- Weight (packed with 2 mine containers) ..... 39.95 kg (88.0 lb)

Palletization (Metal Pallet):
- Pallet size .... 71.8 x 149.9 cm (28-1/4 x 59.0 in.)
- Pallet weight (empty) ..... 63.5 kg (140. lb)
- Pallet configuration (tubes) .... 4 across x 5 high = 20 tubes
- Pallet height..... . 99.1 cm (39.0 in.)
- Pallet cube..... ... 1.07 cu meter (37.6 cu ft)
- Pallet weight (loaded)..... 852.6 kg (1,900.0 lb)

Shipping and Storage Data:
- DOD hazard class..... 1.1
- DOD compatibility group .... D
- DOD hazard class..... Class A Explosive
- DOT container marking..... EXPLOSIVE MINES
- US Coast Guard Classification ..... X-A
- Shelf life .... Indefinite
- DODAC..... ..... 1345-J003
- NSN..... 1345-01-384-3617

References:

TM 9-1095-208-10-1
TM 9-1095-208-23-1&P
TM 9-1345-203-12&P
TM 9-1095-208-23-2&P

☆ U.S. GOVERNMENT PRINTING OFFICE: 1997 545-037/60702

CANISTER, MINE, PRACTICE: M88

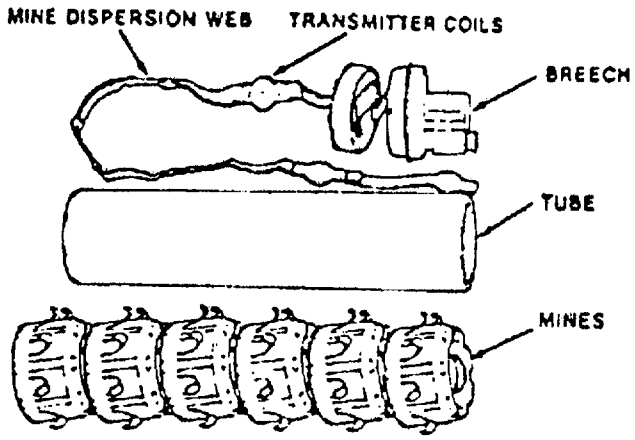

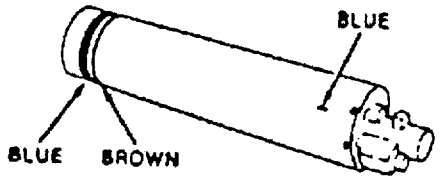

U
AR 4336

Type Classification:

Standard Jan. 89

Use:

The M88 practice mine canister is used with the M139 mine dispenser (VOLCANO) in field training in the handling and operation of the M88 mine canister and M139 mine dispenser.

Description:

The M88 mine canister is an expendable item consisting of an aluminum tube and breech assembly containing six dummy mines. Also housed in the canister are a dispersion strap, and a propulsion system. The propulsion system consists of a self-contained electrically initiated primer, and a pressure cartridge assembly containing the launching propellant. The canister is painted in light blue and has one brown and one blue color band near the muzzle. The end cap has a brown ring around a blue center dot.

Functioning:

When an electrical pulse is received, the electric primer initiates the pressure cartridge expelling a mine stack from the canister. The stack consists of six dummy mines.

Tabulated Data:

Canister, ... Mine: M88:
Length ..... 24.09 in.
Diameter ..... 5.0 in.
Weight (loaded with 6
dummy mines)..... 13.62 kg (30.0 lb)
Color Blue No. 35109
Marking Blue, Brown, Black
Dummy mine 6
Pressure cartridge..... 1
Electrical primer 1

Explosives:

Pressure Cartridge:
Propellant M1 type I ..... 4.8 g
Propellant, black
powder ..... 1.0 g
Lead styphnate..... 62 mg
Electric Primer:
Boron potassium
perchlorate ..... 10 mg
Titanium potassium
perchlorate ..... 25 mg
Mine Canister (Each):
Lead styphnate..... 62 mg
Propellant M1 type 1..... 4.8 g
Propellant, black
powder..... 1.0 mg
Boron potassium
perchlorate ..... 10 mg
Titanium potassium
perchlorate ..... 25 mg

Temperature Limits:
- Operational:
  - Minimum ..... -37°C (-35F)
  - Maximum ..... +63°C (+145°F)
- Storage:
  - Minimum ..... -530C (-650F)
  - Maximum ..... +710C (+160°F)

Shipping and Storage Container:
- (Metal Tube Type):
- Length ..... 49.86 cm (59.0 in.)
- Diameter ..... 17.27 in. (6.8 in.)
- Weight (empty) ..... 11.34 kg (25.0 lb)
- Weight (packed with 2 mine canisters) ..... 39.95 kg (88.0 lb)

Palletization (Metal Pallet):
- Pallet size ..... 71.8 x 149.9 cm ..... (28-1/4 x 59.0 in.)
- Pallet weight (empty) ..... 63.5 kg (140. lb)
- Pallet configuration (tubes) ..... 4 across x 5 high = ... 20 tubes
- Pallet height ..... 99.1 cm (39.0 in.)

Pallet cube ..... 1.07 cu meter ..... (37.6 cu ft)

Pallet weight (loaded) ..... 852.6 kg ..... (1,900.0 lb)

Shipping and Storage Data:
- DOD hazard class 1.2
- DOD compatibility group C
- DOD hazard class ..... Class C Explosive
- DOT container marking ..... CARTRIDGE ..... PRACTICE ..... AMMUNITION
- US Coast Guard Classification ..... X-A
- Shelf life ..... Indefinite
- DODAC 1345-K042
- UNO serial number 0276
- UNO Proper shipping name ..... Cartridges, power ..... device
- NSN 1345-01-233-2030

References:

TM 9-1095-208-10
TM 9-1345-203-12&P
TM 9-1345-203-34&P

CHAPTER 9

DISPENSER AND MINES

THIS PAGE INTENTIONALLY LEFT BLANK

DISPENSER AND MINES, GROUND: M131

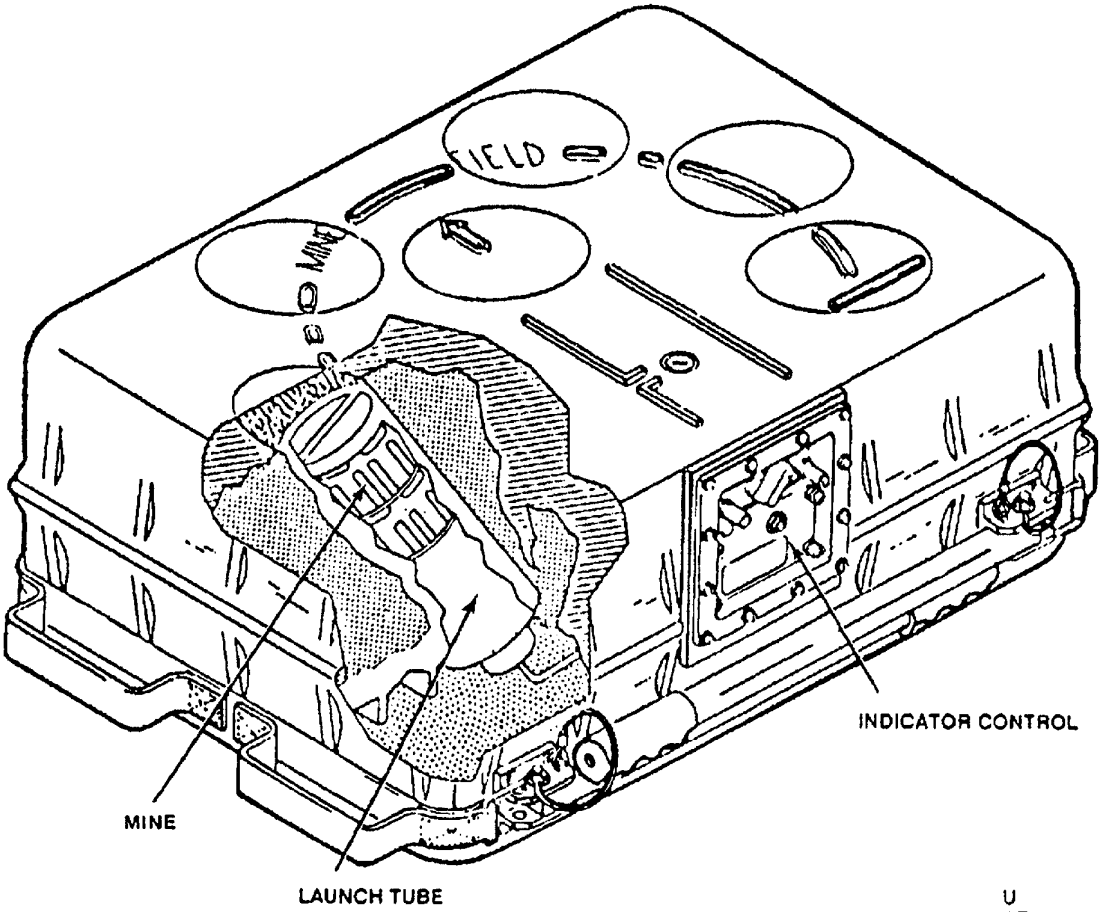

U

U
AR 4515

Type Classification:

STD-LCC-A (6-20-86)

Use:

The M131 Mine Dispenser is used with the M71 Remote Control Unit (RCU) or Blasting Machine to deploy small antitank and antipersonnel minefields.

Description:

The M131 Mine Dispenser is a man portable, remotely controlled, antipersonnel (AP) and antitank/antivehicle (AT/AV) mine dispensing system. The mines may be deployed on command by a blasting machine hardwired to dispenser or by operating a radio frequency (RF) Remote Control Unit (RCU). The dispenser contains a battery powered Indicator Control (IC) and seven launch tubes. Each tube houses three mines for a total of twenty-one mines per dispenser (17 AT/AV and 4 AP mines). The IC is powered by a lithium cell battery and contains the electronic package which receives, interprets, and acts on the signals received. The dispenser is designed as a self-contained shipping, storage, and deployment unit that is not reloadable once the mines have been deployed. The mine dispenser, which weighs approximately 160 pounds, is easily emplaced by four persons.

Functioning:

The Indicator Control in the dispenser receives command and control data from the M71 RCU when the magnetic coupling devices of the RCU and dispenser are mated together. If no data is transferred to dispenser, there will be no command and control capability once the mines are deployed. After dispenser is set to arm for 5 minutes, mines can be deployed via the M71 RCU or by a blasting machine hardwire connecting to the Indicator Control.

When the Indicator Control receives the deploy command, it will send signals to the mine Electronic Battery Initiator (EBI) to activate the mine batteries. The Indicator Control then sends control data to mines and activates actuators in dispenser to detonate cartridges to launch mines.

Tabulated Data:

a. Dispenser and Mines, Ground: M131:

Color ..... Olive drab
Marking ..... White
Length ..... 81.8 cm
Width ..... 57.6 cm
Height..... 34.5 cm
Cube ..... 0.137 cu m
Weight (without battery) ..... 68.1 kg (loaded)
Number of tube dispensers 7
Number of mines per tube 3
Total number of mines ..... 21 (4 AP, 17 AT)
Ejection charge..... 12 gage cartridge ..... (electrically deto- ..... nated)
Total explosive weight ..... 11.98 kg

Explosives:
Comp B-4 ..... 1.64 kg
RDX Estane..... 10.03 kg
PBXN-5 ..... 258.58 g
Comp A-5 ..... 25.12 g
Lead styphnate..... 21.4 mg
M5 propellant ..... 31.5 g
RD 1333 lead azide..... 73.0 mg
HMX ..... 336.0 mg
Boron borochromate..... 170.0 mg
Barium styphnate and KDNBF 50/50 mixture - 109.2 mg
Barium nitrate..... 483.0 mg
Lead azide..... 378.0 mg
Center lead..... 4.18 mg

Material:
Outer ..... High density rub- ber filled poly- ethylene
Inner ..... Rigid structural foam plastic liner
Tubes..... Aluminum
DODAC 1345-K022
UNO serial number..... 0137
UNO Proper shipping name ..... Mines
NSN 1345-01-160-8909

Temperature Limits:
Operation:
Minimum ..... -40°C (-40°F)
Maximum ..... +600C (+1400F)
Storage:
Minimum ..... -570C (-700F)
Maximum ..... +710C (+1600F)

Power Requirements:
Voltage..... 11-15 Vdc
Current..... 7.4 to 8.2 ma

Power source:
Battery, Primary Lithium Organic, BA-5598/U: Rating 10 to 15 volts dc, weight about 1.5 lb

Pallet Configuration:
Pallet size..... 86.4 cm x 132.1 cm ..... (34 in. x 52 in.)
Pallet weight (including cover and supports)..... 63.5 kg
Pallet w/6 M131 Dispensers..... 472.1 kg
Height - 1 Pallet w/6 dispensers (3 high) ..... 1.22 m (48 in.)
Cube - 1 Pallet w/6 dispensers (3 high) ..... 1.39 cu m ..... (49.1 cu ft)

Shipping and Storage Data:
DOD hazard class 1.1
Storage compatibility group ..... D
Quantity-distance class..... 1.1D
DOT shipping class ..... A
DOT marking..... EXPLOSIVE ..... MINES
US Coast Guard Class..... X-A
Air Transport Loading/ Storage Group (TM 38-250)..... 6
Shelf life ..... 20 yr

b. Antipersonnel Mine:

Color ..... Forest green
Height..... 6.60 cm
Diameter ..... 12.07 cm
Total weight1.54 kg
Total explosive weight ..... 0.42 kg

Explosives:
Main charge, Comp B-4..... 0.41 kg
Booster, Comp A-5 (4 ea)..... 6.28 g (total)
Explosive lead, PBXN-5 (4 ea) ..... 4.0 g (total)
Main charge leads, PBXN-5 (4 ea) ..... 360.0 mg (total)
M100 Detonator:
Lead styphnate..... 0.8 mg
RD 1333 lead azide ..... 14.0 mg
HMX ..... 16.0 mg
Transfer lead, PBXN-5- 73.0 mg
MDF assembly, PBXN-5 (2 cords, 4 end caps) .... 160.0 mg
Cleaning charge M5 Propellant (2 ea) ..... 1.5 g (total)
Micro piston actuator- barium styphnate and KDNBF 50/50 mixture ..... 5.2 mg

Battery Primer:
Barium nitrate..... 23.0 mg
Lead styphnate..... 0.8 mg
Lead azide..... 18.0 mg

c. Antitank Mine:

Color ..... Forest green
Height..... 6.60 cm
Diameter ..... 12.07 cm
Total weight..... 1.86 kg
Total explosive weight ..... 0.60 kg

Explosives:

Main charge, RDX
ESTANE..... 0.59 kg
Booster ring, PBXN-5
(4 ea)..... 13.6 g
Main charge leads,
PBXN-5 (4 ea) ..... 360.0 mg (total)
Center lead..... 246.0 mg
Delay Detonator:
Lead styphnate..... 0.08 mg
RD 1333 lead azide ..... 1.0 mg
Boron borochromate ..... 10.0 mg
HMX ..... 16.0 mg
Transfer lead, PBXN-5- 86.0 mg
MDF assembly,
PBXN-5 ..... 84.0 mg
Cleaning charge M5
propellant (2 ea) ..... 1.5 g (total)
Micro piston actuator -
barium styphnate
and KDNBF 50/50
mixture ..... 5.2 mg
Battery Primer:
Barium nitrate ..... 23.0 mg
Lead styphnate..... 0.8 mg
Lead azide..... 18.0 mg

References:

TM 9-1345-209-10
TM 9-1345-209-23&P

THIS PAGE INTENTIONALLY LEFT BLANK

[redacted]

By Order of the Secretary of the Army:

GORDON R. SULLIVAN
General, United States Army
Chief of Staff

Official

MILTON H. HAMILTON
Administrative Assistant to the
Secretary of the Army
07496

Distribution:
To be distributed in accordance with DA Form 12-34-E, Block 0853, requirements for TM 43-0001-36.

*U.S. Government Printing Office: 1996 - 406-421/50086