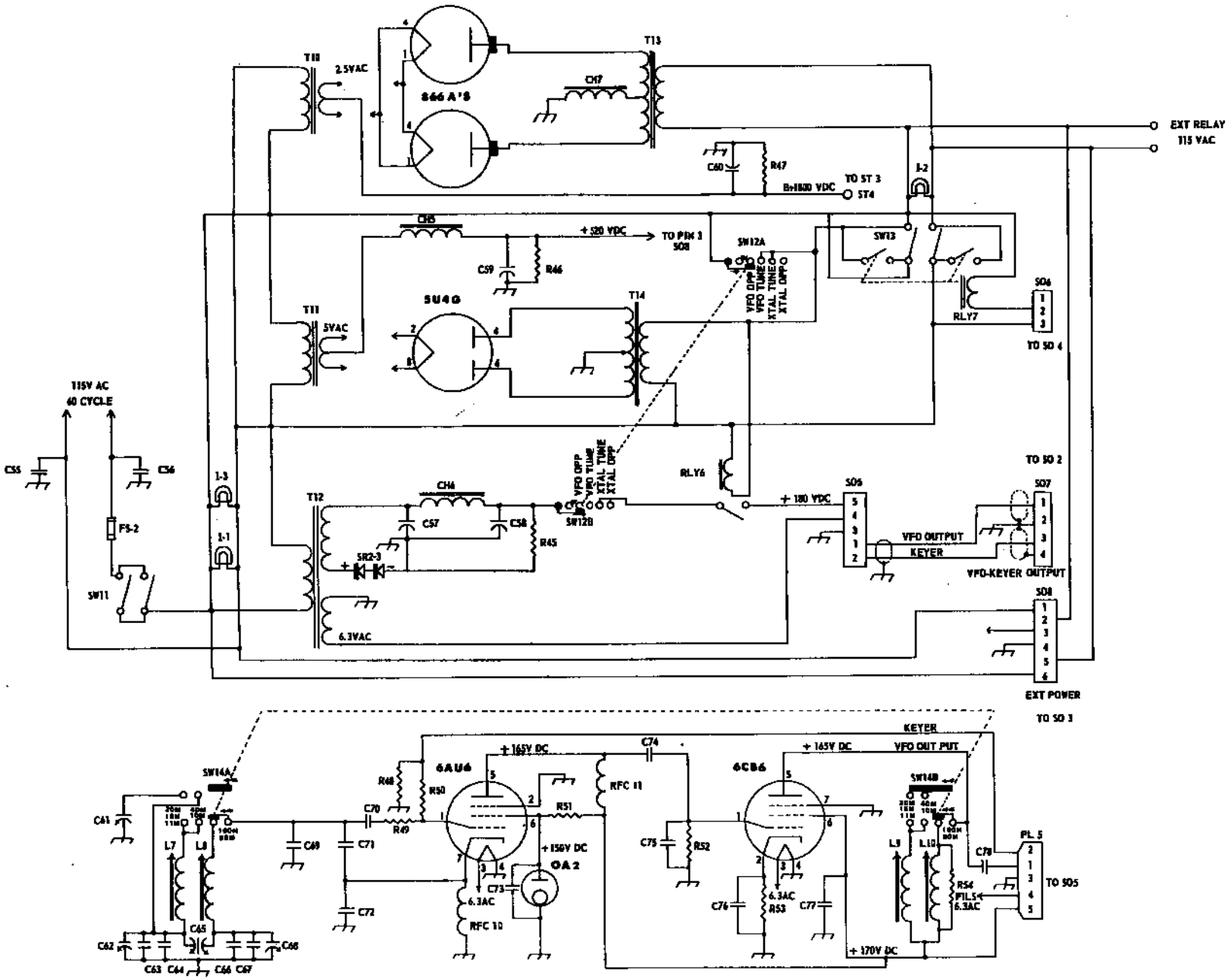


# WRL 500B POWER SUPPLY AND VFO