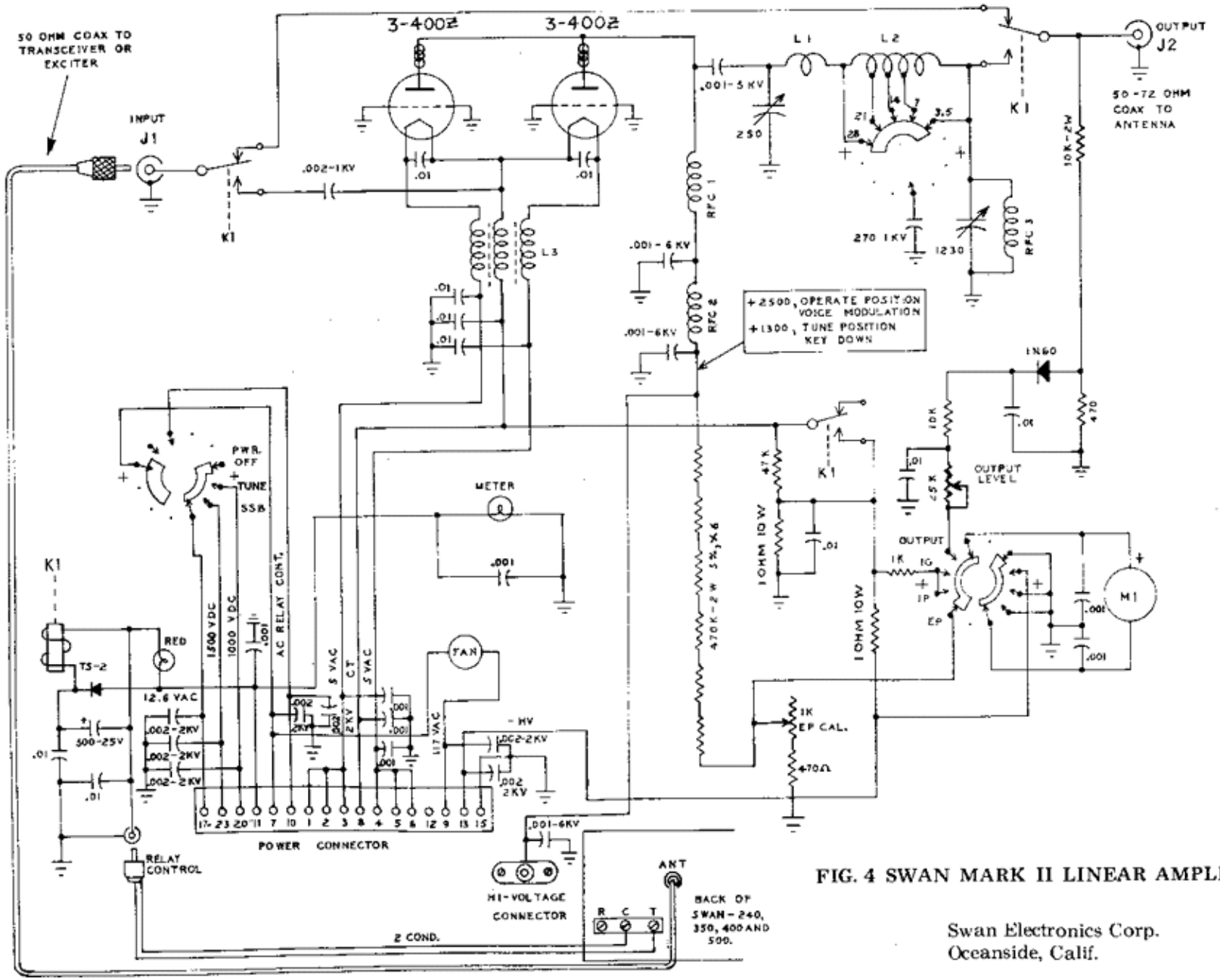

FIG. 4 SWAN MARK II LINEAR AMPLIFIER

Swan Electronics Corp.
Oceanside, Calif.