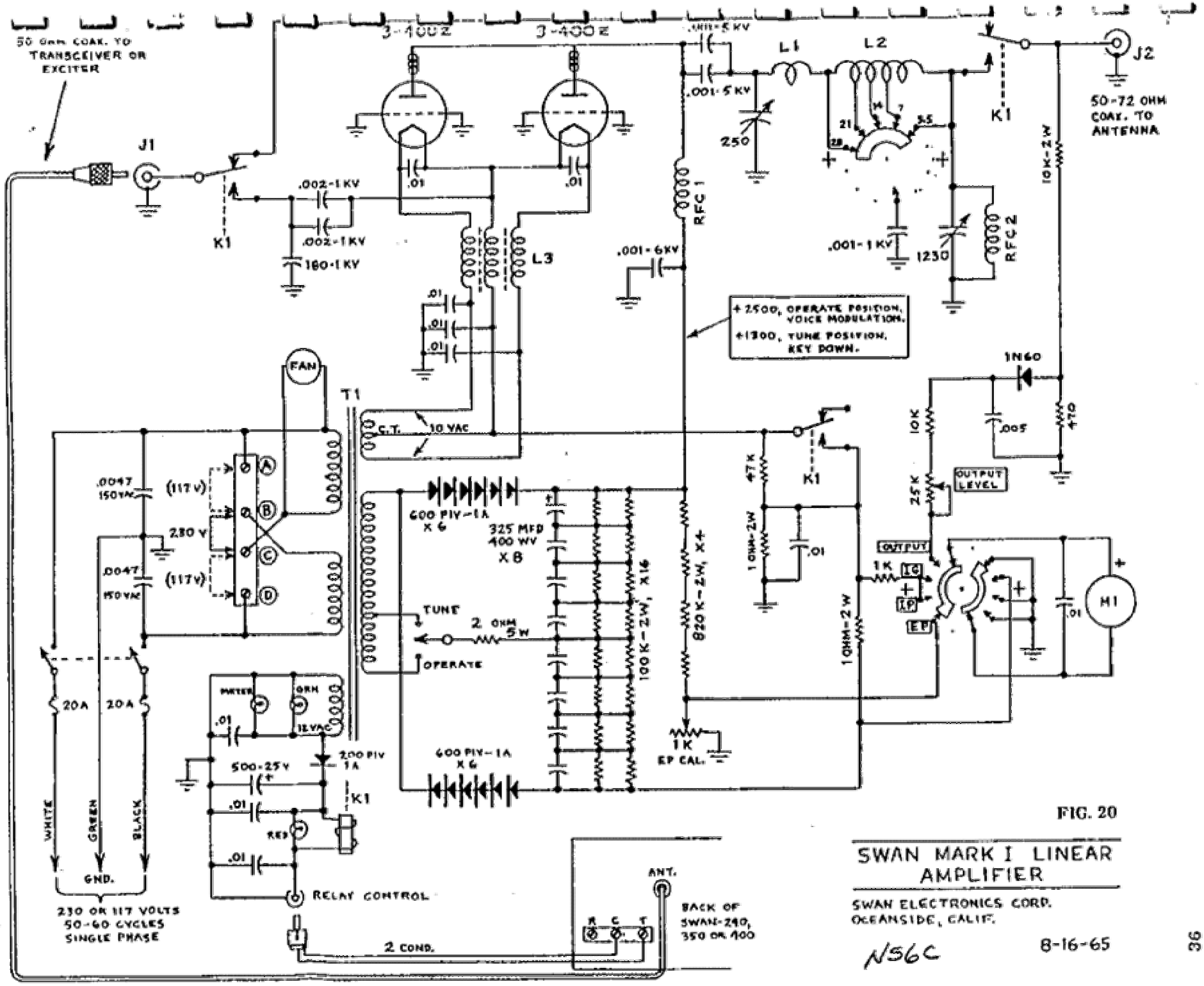

FIG. 20

SWAN MARK I LINEAR AMPLIFIER

SWAN ELECTRONICS CORP.
OCEANSIDE, CALIF.

N56C

8-16-65