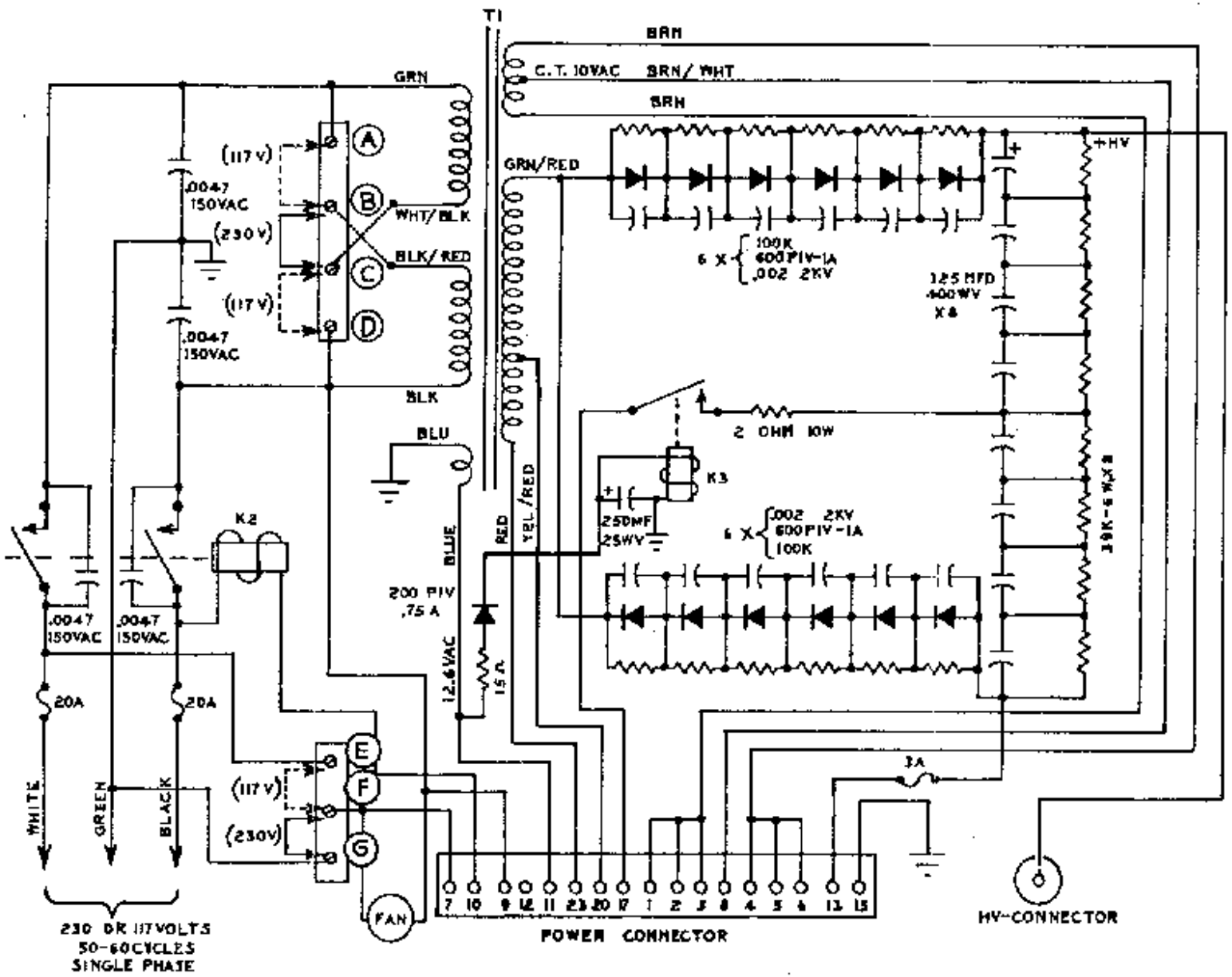

FIG. 5 SWAN MARK 6B POWER SUPPLY

Swan Electronics Corp.
Oceanside, Calif.

9-27-67