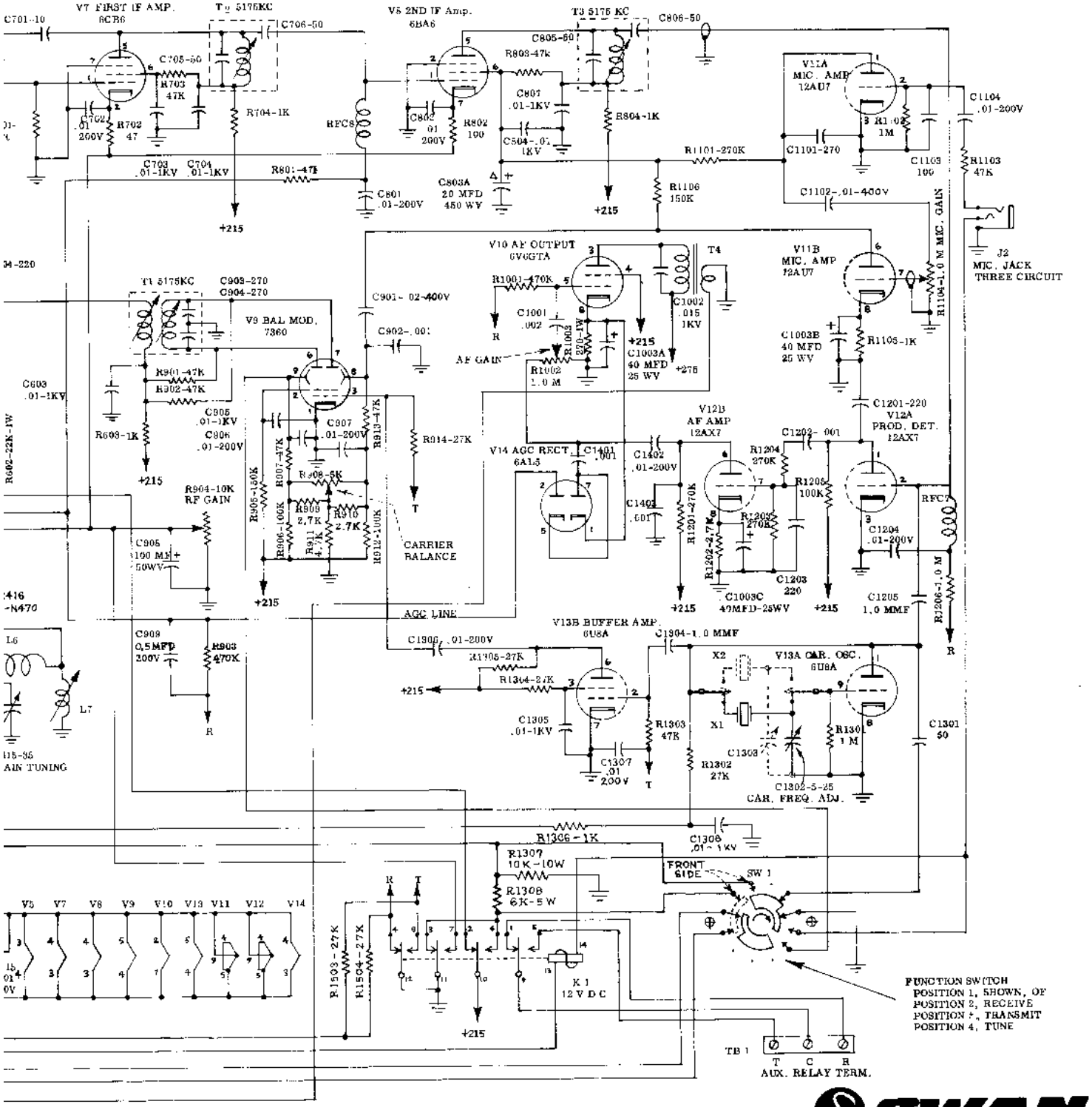

© 7-15-63

SWAN ENGINEERING CO.
117 Via Del Monte Oceanside, Calif.