750 mods

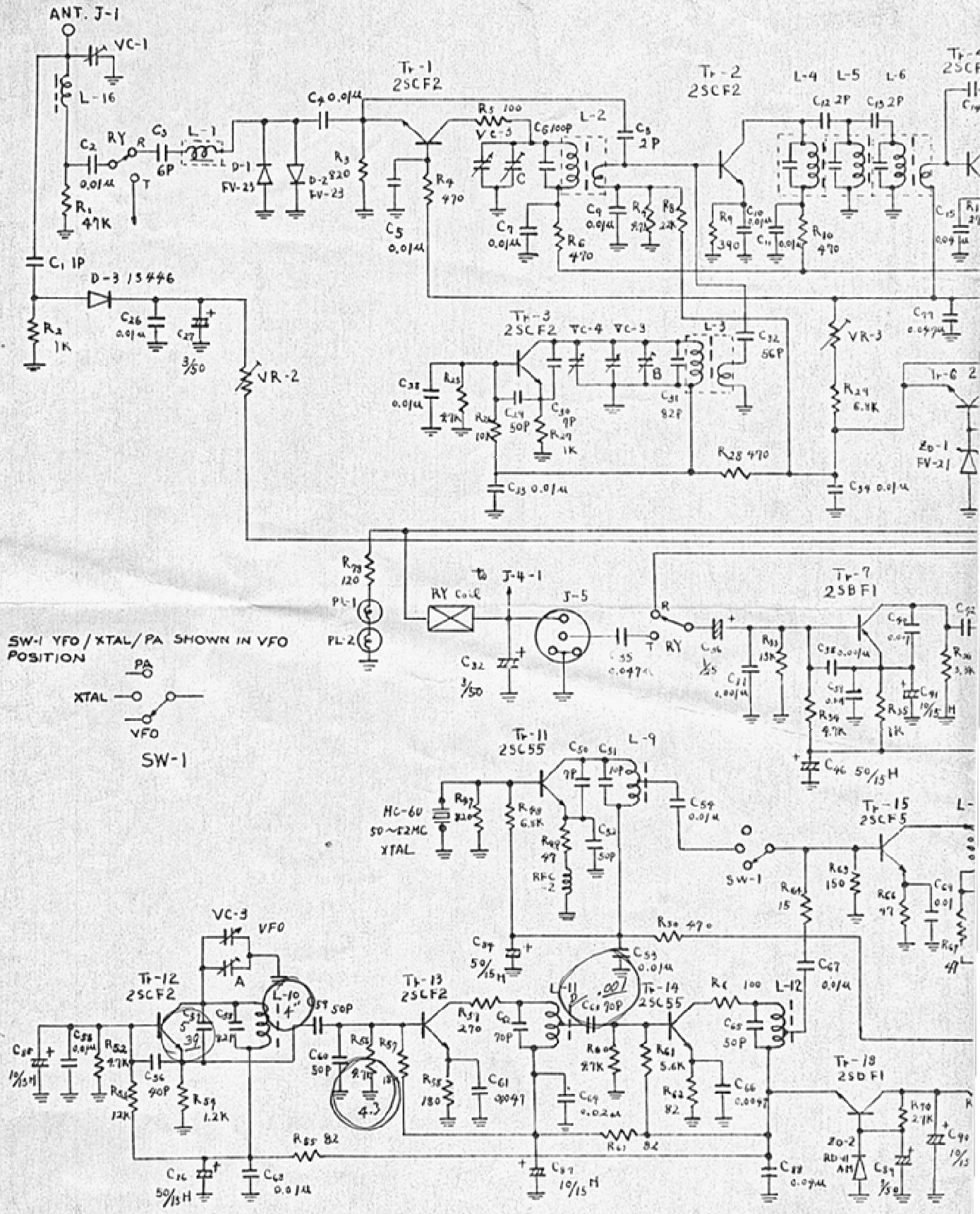
ANT. J-1
VC-1
L-16
RY
L-1
D-1 FV-23
D-2 FV-23
Tr-1 2SCF2
Tr-2 2SCF2
L-2
L-4 L-5 L-6
Tr-3 2SCF2
VC-4 VC-3
L-3
VR-2
VR-3
D-3 1S446
Tr-6
ZD-1 FV-21
RY Coil
to J-4-1
J-5
Tr-7 2SBF1
PL-1
PL-2
SW-1 YFO / XTAL / PA SHOWN IN VFO POSITION
PA
XTAL
VFO
SW-1
Tr-11 2SC55
L-9
HC-60 50~52MC XTAL
RFC-2
Tr-15 2SCF5
SW-1
VC-3
VFO
Tr-12 2SCF2
L-10
Tr-13 2SCF2
L-11
Tr-14 2SC55
L-12
Tr-18 2SDF1
ZD-2 RD-11 AM