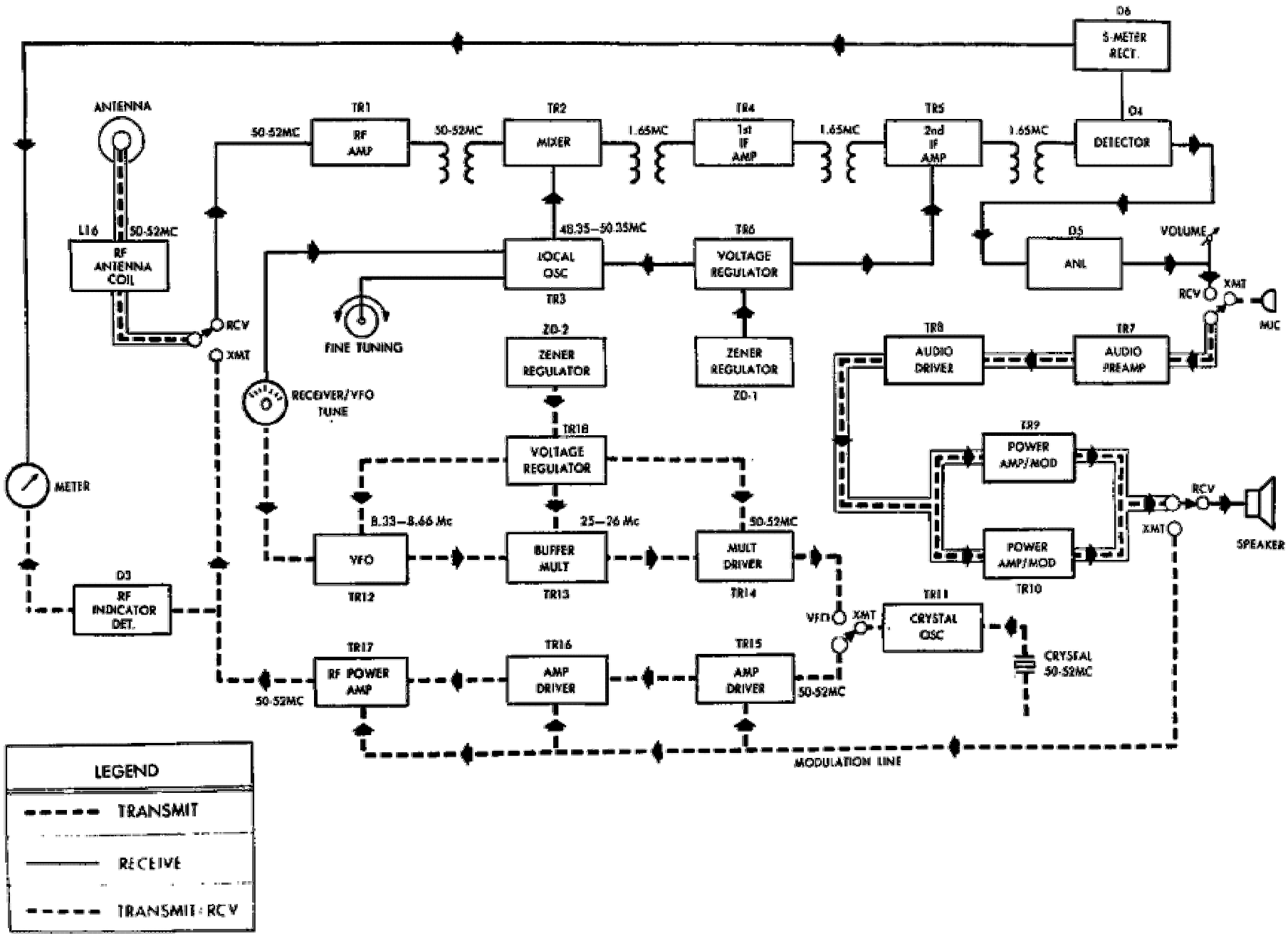


FIGURE 8. FUNCTIONAL BLOCK DIAGRAM