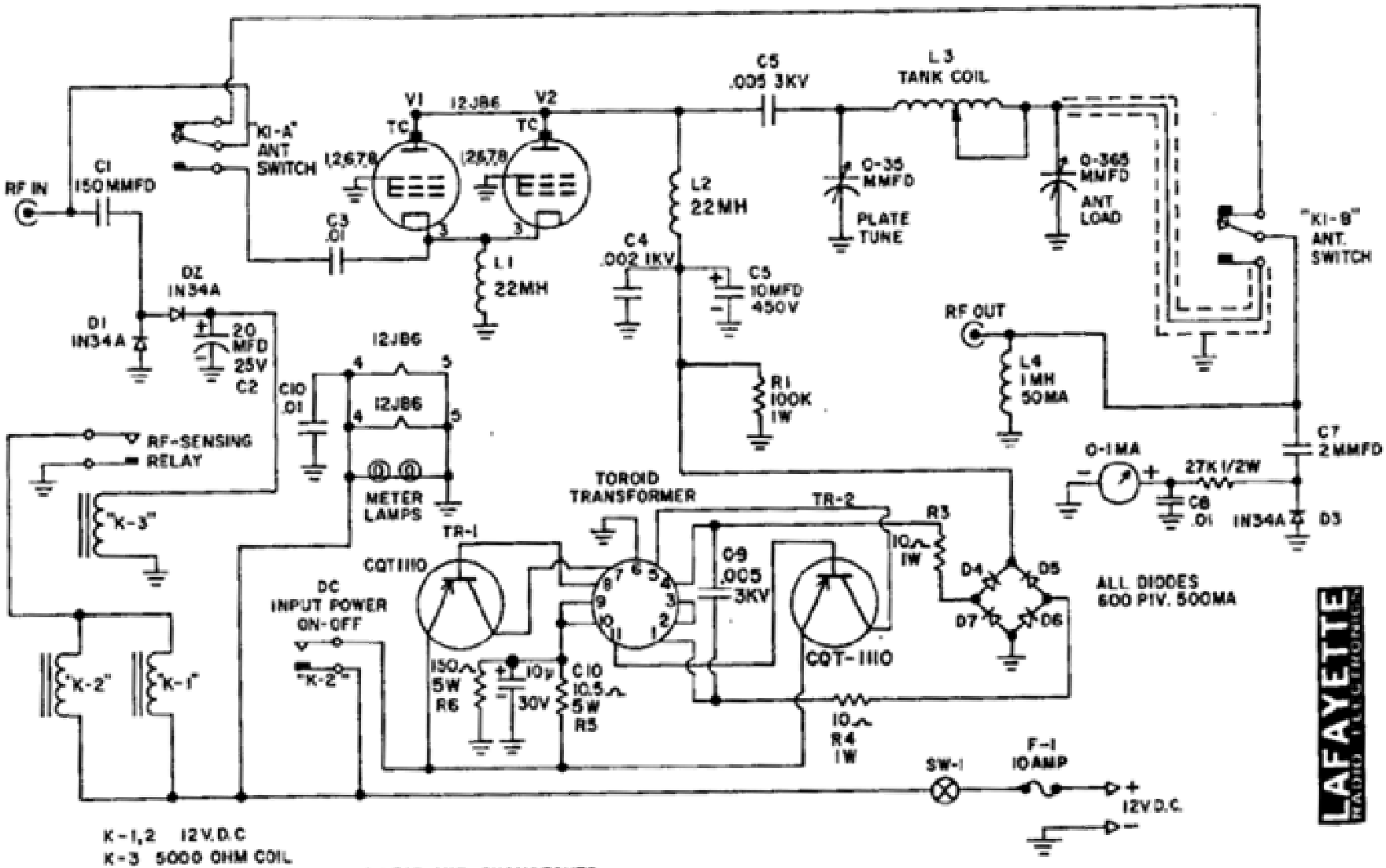

K-1,2 12V.D.C
K-3 5000 OHM COIL
NOTE: K-1 IS LOW LOSS RELAY FOR ANT. CHANGEOVER