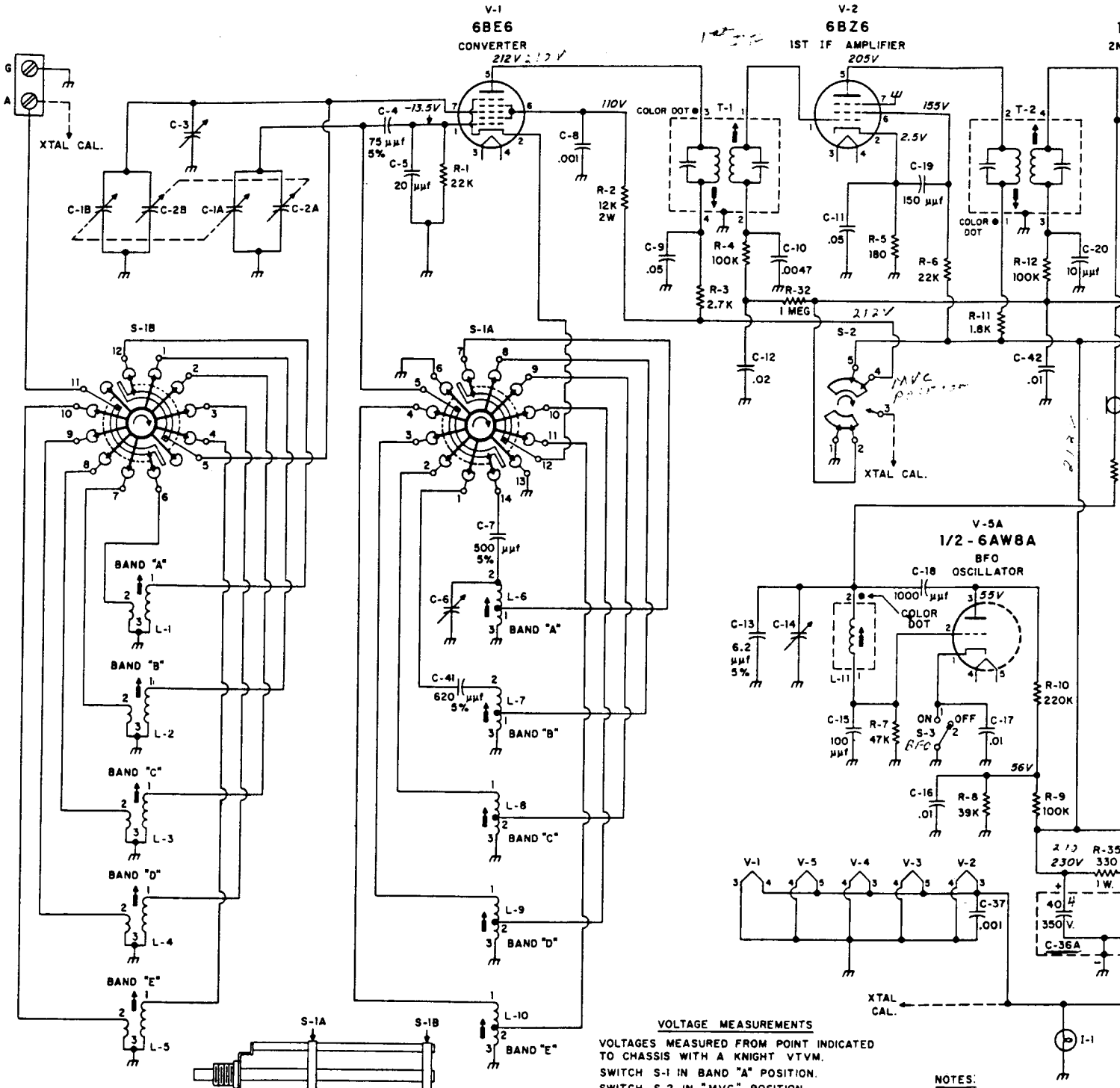
V-1
6BE6
CONVERTER
V-2
6BZ6
1ST IF AMPLIFIER
V-5A
1/2 - 6AW8A
BFO OSCILLATOR
XTAL CAL.
COLOR DOT
S-1B
S-1A
S-2
S-3
BAND "A"
BAND "B"
BAND "C"
BAND "D"
BAND "E"
BAND SELECTOR SWITCH S-1
VOLTAGE MEASUREMENTS
VOLTAGES MEASURED FROM POINT INDICATED TO CHASSIS WITH A KNIGHT VTVM.
SWITCH S-1 IN BAND "A" POSITION.
SWITCH S-2 IN "MVC" POSITION.
SWITCHES S-3 AND S-4 IN "OFF" POSITION.
NO SIGNAL INPUT.
LINE VOLTAGE = 117 V. 60 CYCLES AC.
TOLERANCE ±20%.
NOTES:
RESISTORS INDICATED IN OHMS
K = 1,000 OHMS.
MEG = 1,000,000 OHMS.