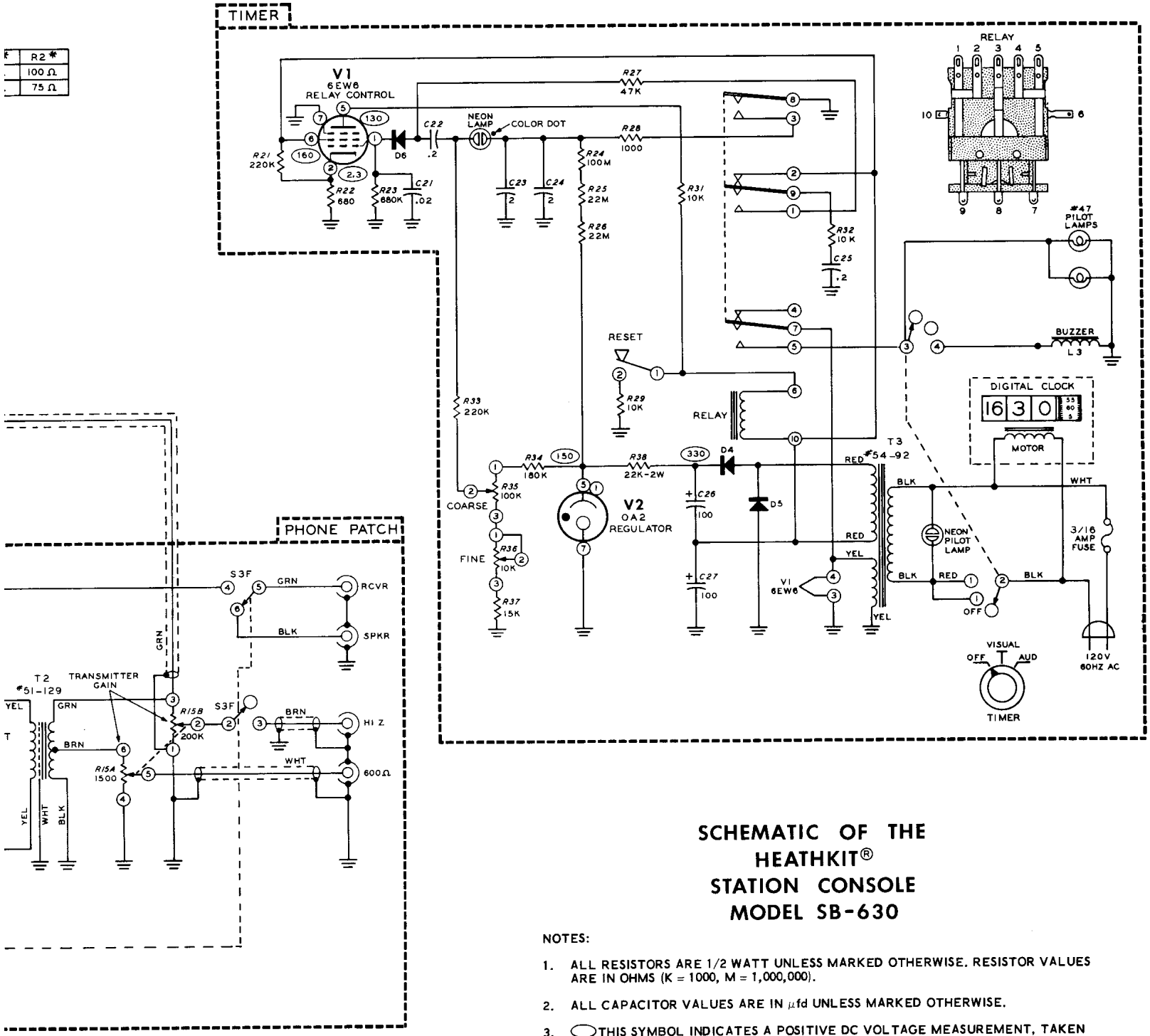

R2 *	
	100 Ω
	75 Ω

SCHEMATIC OF THE HEATHKIT® STATION CONSOLE MODEL SB-630

NOTES:

1. ALL RESISTORS ARE 1/2 WATT UNLESS MARKED OTHERWISE. RESISTOR VALUES ARE IN OHMS (K = 1000, M = 1,000,000).
2. ALL CAPACITOR VALUES ARE IN μfd UNLESS MARKED OTHERWISE.
3. ⬭ THIS SYMBOL INDICATES A POSITIVE DC VOLTAGE MEASUREMENT, TAKEN WITH AN 11 MEGOHM VTVM, FROM THE POINT INDICATED TO CHASSIS GROUND. VOLTAGES MAY VARY ±10%.
4. ALL SWITCH WAFERS SHOWN IN FULL COUNTERCLOCKWISE POSITION, AS VIEWED FROM THE KNOB END OF THE SHAFT.