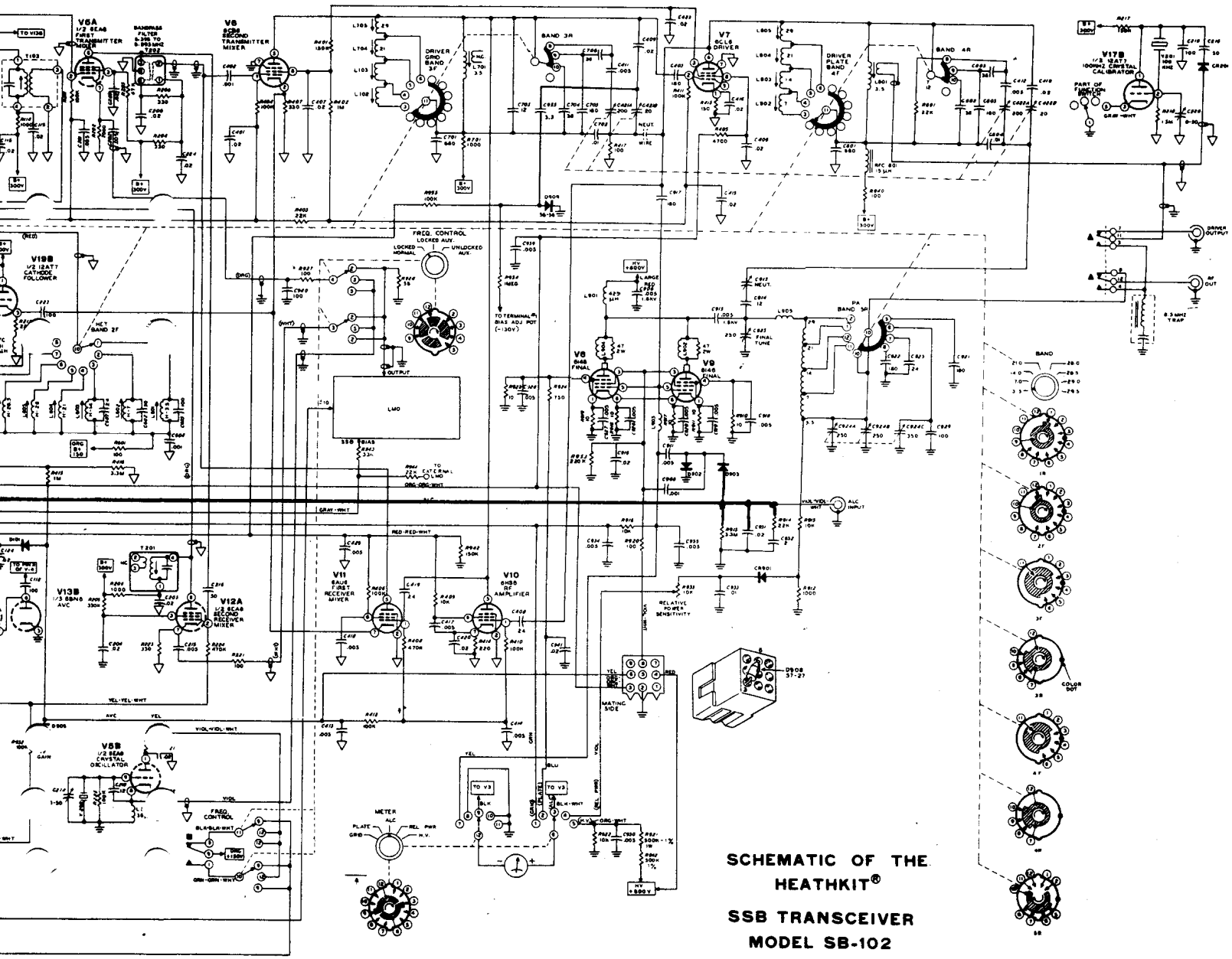

SCHEMATIC OF THE HEATHKIT®

SSB TRANSCEIVER MODEL SB-102

NOTE: LETTER-NUMBER DESIGNATIONS FOR RESISTORS, CAPACITORS, ETC., HAVE BEEN PLACED IN THE FOLLOWING GROUPS:

0-99	PARTS ON MODULATOR CIRCUIT BOARD.
100-199	" IF "
200-299	" BANDPASS "
300-399	" AUDIO "
400-499	" RF - DRIVER "
500-599	" CRYSTAL "
600-699	" HETERODYNE OSCILLATOR "
700-799	" DRIVER GRID "
800-899	" DRIVER PLATE "
900-999	PARTS MOUNTED ON THE CHASSIS.

1. ALL RESISTORS ARE 1/2 WATT UNLESS MARKED OTHERWISE. ALL RESISTOR VALUES ARE IN OHMS (K = 1000, MEG = 1,000,000).
2. ALL CAPACITOR VALUES OVER 1 ARE IN pF UNLESS MARKED OTHERWISE.
3. REFER TO THE X-RAY AND CHASSIS VIEWS FOR PHYSICAL LOCATION OF PARTS.
4. SEE THE VOLTAGE CHARTS (FOLD-OUT FROM PAGE 122) AND THE RESISTANCE CHART (FOLD-OUT FROM PAGE 123) FOR ALL MEASUREMENTS.
5. ALL SWITCHES ARE IN THE POSITION INDICATED BY THE KNOB POINTERS.
6. ARROW (↻) INDICATES CLOCKWISE ROTATION OF KNOB (VIEWED FROM KNOB END).
7. ▭ INDICATES HOOKUP WIRE NOT IN THE HARNESS.
8. ( ) INDICATES COLOR CODE OF COAXIAL CABLE.
9. ALL RELAY CONTACTS SHOWN IN TRANSMIT (TUNE) POSITION.
10. FOR GREATER CLARITY, RELAY SECTIONS ARE SHOWN CLOSEST TO THE CIRCUITS IN WHICH THEY ARE USED. ONE OF THE FOLLOWING MARKS IS USED TO IDENTIFY THE SEPARATED SECTION OF THE RELAYS:
    - ▲ = PART OF RELAY RL1
    - ■ = PART OF RELAY RL2
11. SWITCH WAFERS ARE IDENTIFIED AS IN THE FOLLOWING EXAMPLE:

    BAND — FRONT PANEL NAME OF SWITCH.
    2 — WAFER NUMBER, WITH THE SWITCH VIEWED FROM THE FRONT PANEL.
    F — F = FRONT SIDE OF THE WAFER. R = REAR SIDE OF THE WAFER.

12. ⏚ INDICATES CHASSIS GROUND
    ▽ INDICATES CIRCUIT BOARD GROUND.