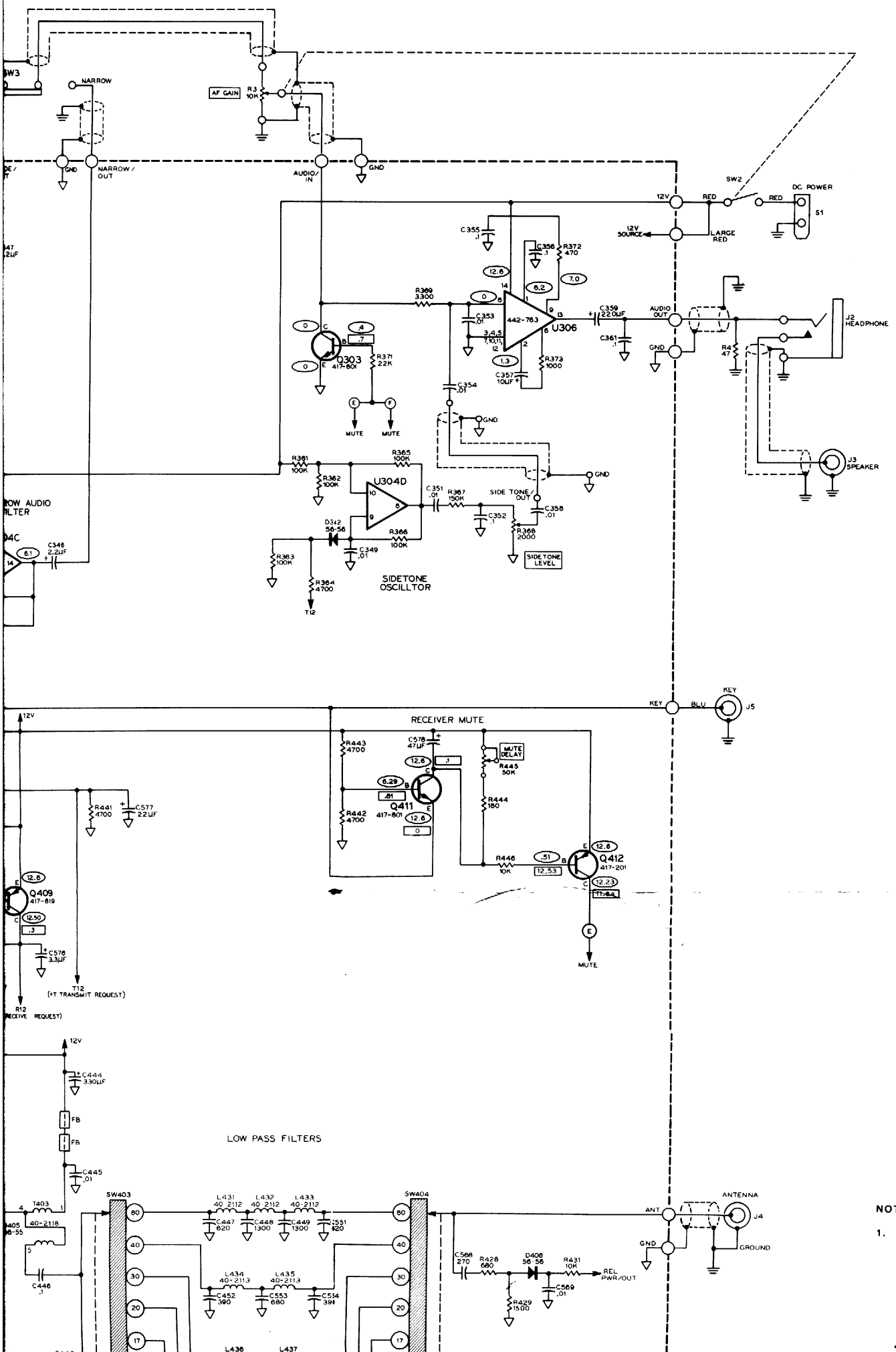

NOTES:

1. COMPONENT NUME

1-99 PARTS M

100-299 PARTS M

300-399 PARTS M
T/R CIRC

400-499 PARTS M