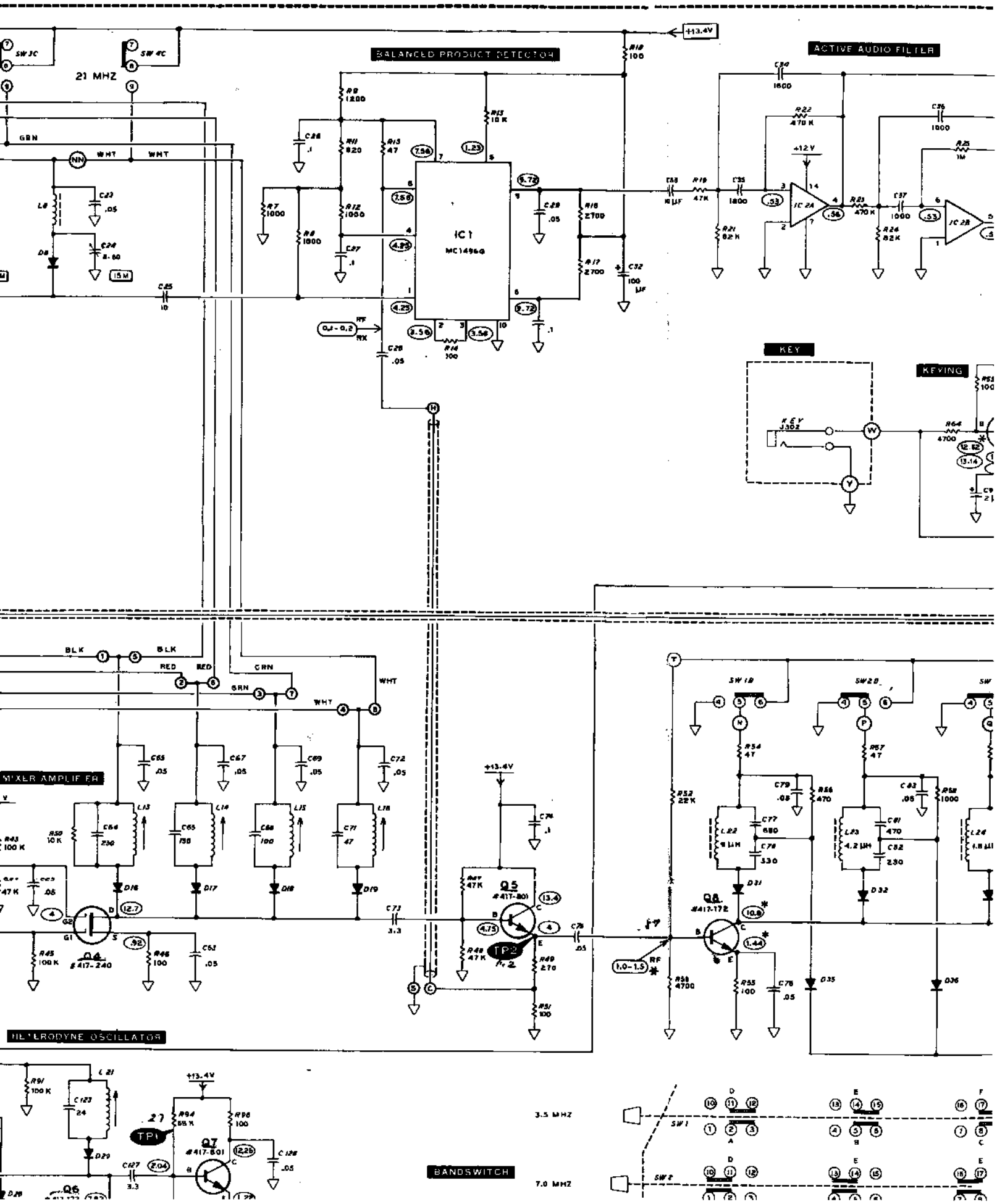
BALANCED PRODUCT DETECTOR
ACTIVE AUDIO FILTER
KEY
KEYING
MIXER AMPLIFIER
HETERODYNE OSCILLATOR
BANDSWITCH
IC1
MC1496G
IC 2A
IC 2B
Q4
Q5
Q6
Q7
Q8
TP1
TP2
+13.4V
+12V
21 MHZ
15 M
3.5 MHZ
7.0 MHZ