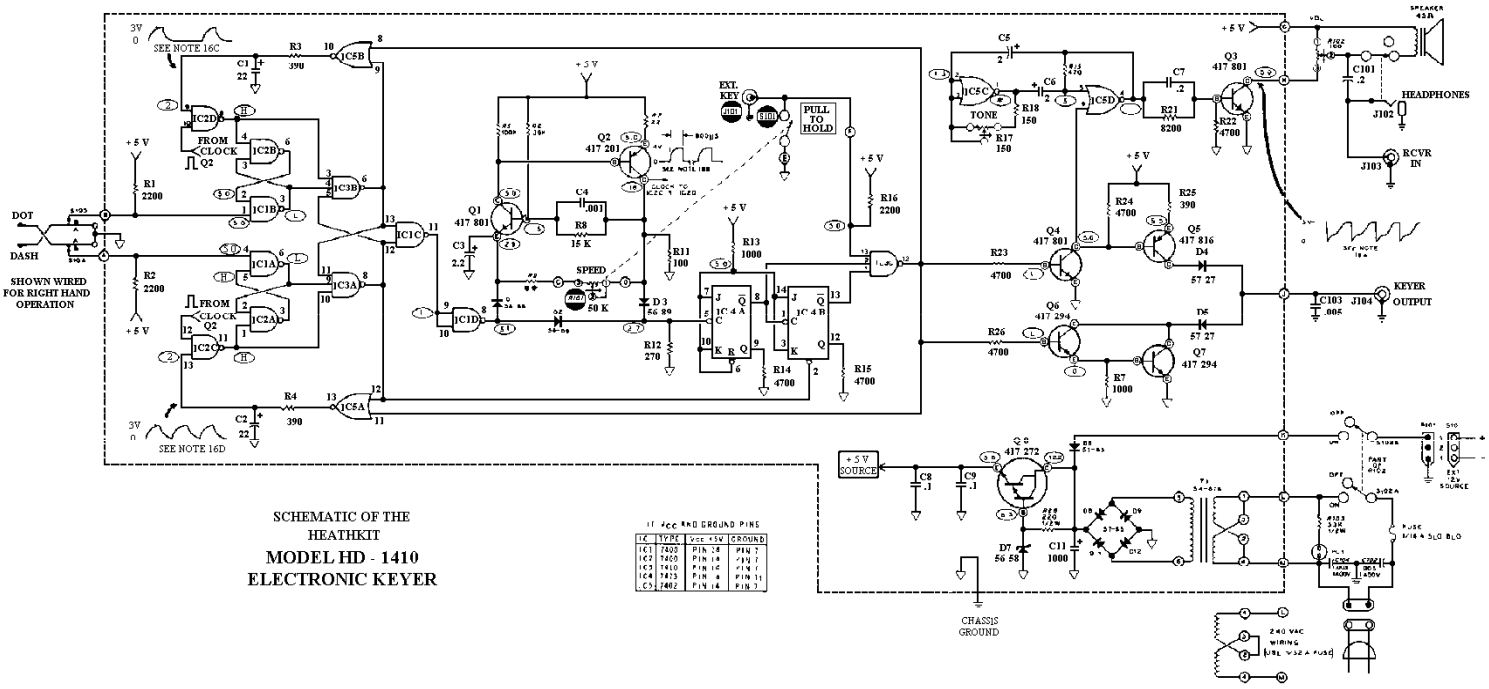

SCHEMATIC OF THE
HEATHKIT
MODEL HD - 1410
ELECTRONIC KEYER

IC Vcc AND GROUND PINS

IC	TYPE	Vcc +5V	GROUND
IC1	7400	PIN 14	PIN 7
IC2	7400	PIN 14	PIN 7
IC3	7410	PIN 14	PIN 7
IC4	7473	PIN 4	PIN 11
IC5	7402	PIN 14	PIN 7