mmunicatio

OPERATING and SERVICE INSTRUCTIONS

SX-100
MARK IA

the hallicrafters co.

MANUFACTURERS OF RADIO, TELEVISION AND ELECTRONIC EQUIPMENT, CHICAGO 24 U. S. A.

Fig. 1. Hallicrafters SX-100 Receiver

SECTION 1.
GENERAL DESCRIPTION

Your new Hallicrafters SX-100 Selectable Sideband Receiver is precision built to bring you the finest in world-wide radio reception. This fourteen-tube dual conversion superheterodyne receiver tunes from 538 to 1580 kilocycles and 1.72 to 34 megacycles, with calibrated electrical bandspread provided oa the 80, 40, 20, 15, and 11-10 meter amateur bands. You'll hear foreign and domestic shortwave broadcasts, amateurs, police, aircraft, skips-at-sea, and countless other exciting distant stations . . . as well as all your favorite programs on standard broadcast. The receiver provides for the reception of CW, AM, and single-sideband signals over its entire tuning range, the upper or lower sideband heing readily selectable by means of a front panel control. This selectable sideband feature not only greatly simplifies tuning of single-sideband signals but is also useful in eliminating heterodyne interference when receiving AM signals.

Unlike the ordinary dual-conversion receiver, your SX-100 receiver employs dual conversion on all bands. As a result, images are practically non-existent. "Razor-sharp" selectivity is made possible by the use of an adjustable 50.5 kc second IF with four high-Q, permeability-tuned circuits. Receiver selectivity is variable in five steps from 500 cycles to 5 kc at 6 db down and from 5 to 20 kc at 60 db down.

A tuned r-f stage assures maximum sensitivity and a high signal-to-noise ratio for outstanding reception of weak and distant signals. A manual sensitivity control prevents overloading by strong signals. An antenna trimmer, adjustable from the front panel, permits peaking of the r-f stage to compensate for loading effects of various antennas. A notch filter circuit allows rejection of an extremely narrow portion of the IF passband. With the notch filter, an interfering signal can easily be "notched out". The positioa and the degree of notch rejection are adjustable from the front panel.

Outstanding frequency stability is achieved by the use of ceramic trimmers and coil forms in the 1st conversion oscillator, extensive temperatore compensation, voltage regulation of all oscillators, and the use of a crystal-controlled 2nd conversion oscillator.

Tuning is accomplished by a precision gear drive tuning mechanism to insure extremely close calibration and accurate resetability. Smooth flywheel tuning affords maximum traverse speed and operating ease. A 100 division logging scale on the MAIN TUNING and BANDSPREAD knobs, plus a hundreds scale on the tuning dials, assures ease and accuracy in logging and relocating stations of special interest. The logging number is the logging number of the dial plus the number on the knob scale. For example; if the main tuning dial logging scale reads 12, and the MAIN TUNING knob scale reade 25, the logging number is 1225. A built-in 100 kc crystal calibrator provides marker signals at every 100 kc on the dial for checking calibration accuracy. A trimmer capacitor, accessible from the top of the chassis, permits adjustment of the calibrating oscillator to exactly 100 kc by comparison with the frequencies traasmitted by statioa WWV.

The delayed AVC circuit in the receiver functions on both AM and CW signals to keep the output of the receiver constant regardless of input-signal variations at the antenna. This type of AVC circuit is especially advantageous in that it provides excellent control over a very wide range of signal strengths yet maiatains full receiver sensitivity on weak signals.

An automatic series noise limiter circuit, controlled by a switch on the front panel, reduces interference from electrical equipment, ignition noise, and other types of pulse type noise.

The "S" meter is used when receiving AM signals to indicate the accuracy of tuning and the relative strength of received signals. The meter is calibrated in microvolts, "S" units from 1 to 9, and in decibels above S9 to + 80 db.

The Receive-Standby switch on the front panel silences the receiver but leaves the heater and plate power on to provide instant reception between transmission periods. Provision has also been made in the receiver for remote receive-standby control, and for transmitter switching from the front panel.

Audio outpnt connections include terminals for a 3.2-ohm speaker and a 500/600-ohm output for line or speaker. A front panel jack for headphones is also provided and the speaker is automatically silenced when the headphone plug is inserted. A phono input jack at the rear of the receiver permits attachment of a record player.

The receiver is designed to operate on 105 to 125 volt, 50/60 cycle AC current. Provision is also made in the receiver for operation from an external DC power supply or batteries in areas where AC power is not available.

SECTION 2.
INSTALLATION

2-1. UNPACKING

After unpacking the receiver, examine it closely for damage which may bave occured in transit. Should any sign of damage be apparent, file a claim immediately with the carrier stating the extent of damage. Carefully check all shipping lahels and tags for instructions before removing or destroying them.

2-2. LOCATION

The receiver may he placed in any location that will permit free air circulation through the ventilation holes and openings in the cabinet. Avoid excessively warm locations such as those near radiators and heating vents. The external speaker may he located in any convenient position although it is recommended tbat it not he placed on top of the receiver for reasons of ventilation.

2-3. ANTENNAS

The r-f input of the receiver ia designed for operation from either a single-wire antenna, or a balf-wave doublet or other type antenna with transmission line impedances from 52 to 600 ohms. Antenna connections are made tc a three terminal strip at the rear of the receiver marked "A1", "A2", and "G". Mounting holes are also provided, adjacent to the antenna terminals, for installation of an AN type SO-239 connector for coaxial cable installations.

A. SINGLE WIRE ANTENNA

The simplest antenna and one which will provide satisfactory results throughout the entire tuning range is a conventional single-wire antenna. In most localities, good results can be obtained with just the 15-foot length of antenna wire supplied with the receiver. (See Fig. 2.) Simply attach one end of this wire to terminal "A1", connect the jumper link between terminals "A2" and "G", and then run the wire about the room in any convenient manner. If the receiver is operated in a steel constructed building or where receiving conditions are exceptionally poor, an outside antenna, 50 to 100 feet long, may he necessary. The outside antenna should be erected as high as possible and kept free from surrounding objects. In some locations, reception may he improved by connecting a ground wire (ordinary copper wire) from terminal "G" to a cold water pipe or outside ground rod.

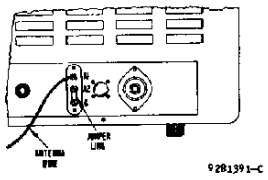

Fig. 2. Single Wire Antenna

B. HALF-WAVE DOUBLET ANTENNA

For top performance, especially on the shortwave and amateur bands, the use of a half-wave doublet or other type of antenna employing a 52 to 600-ohm transmission line is recommended. A typical doublet antenna installation is shown in Fig. 3. The doublet antenna should he cut to the proper length for the most used fre-

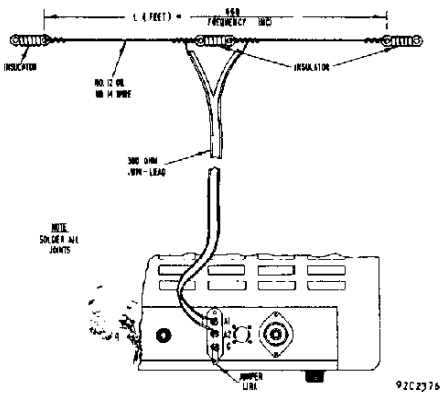

Fig. 3. Doublet Antenna Using Twin-Lead Transmission Line

quency or band of frequencies. The overall length in feet of a doublet antenna is determined by the following formula:

$$\text{Length in feet} = \frac{468}{\text{Frequency in megacycles}}$$

The doublet antenna is directional and should be erected with its entire length facing a desired station for maximum signal pickup.

The doublet antenna may be fed with either a balanced or unbalanced transmission line. When a balanced line such as "twin-lead" or a twisted pair is used, the line connects to terminals "A1" and "A2" and the jumper link between "A2" and "G" is disconnected. (See Fig. 3.) When using an unbalanced line such as coaxial cable, the inner conductor connects to terminal "A1", the outer metal braid connects to terminal "A2", and the jumper link connects between terminals "A2" and "G". A ground wire may improve reception when using an unbalanced type line.

By feeding the doublet antenna with a transmission line having an impedance of 300 ohms, a broader frequency response is obtained than that possible with a 50-75 ohm line.

The doublet antenna provides optimum performance only at the frequency for which it is cut. Therefore, it may be desirable for reception on frequencies remote from the antenna frequency to utilize the antenna as a single wire type. This is accomplished by connecting the two transmission line leads together and connecting them to terminal "A1". The jumper link in this case should be connected between terminals "A2" and "G".

In an installation where the receiver is used in conjunction with a transmitter, it may be advantageous to use the same antenna for receiving as for transmitting. This is especially true when a directive antenna is used since the directive effects and power gain of the transmitting antenna are the same for receiving as for transmitting. Switching of the antenna from the transmitter to the receiver may be accomplished with a double-pole, double-throw antenna changeover relay or knife switch connected in the antenna leads.

For further information regarding antennas, refer to the "Radio Amateur's Handbook" or the "A.R.R.L. Antenna Book", both published by the American Radio Relay League, West Hartford, Conn., U.S.A.

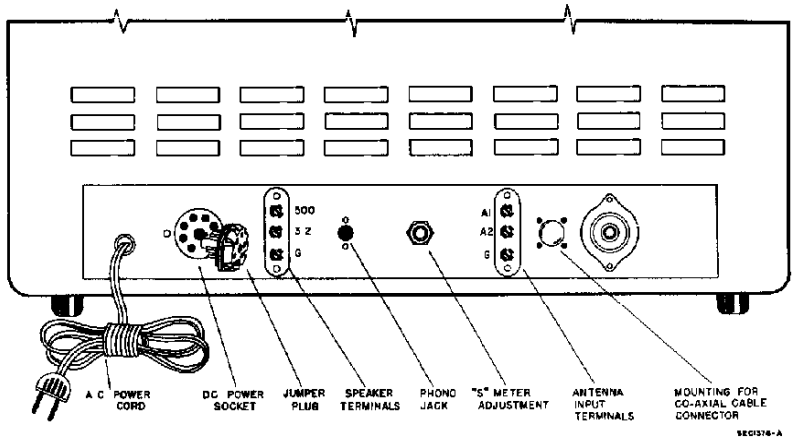

Fig. 4. Rear View of Receiver

2-4. POWER SOURCE

The receiver is designed to operate directly on 105 to 125 volt, 50-60 cycle AC current. Provision has also been made in the receiver for operation from an external DC power source for portable or emergency service in areas where AC power is not available. Connections to the DC source are made through the DC POWER SOCKET at the rear of the receiver. (See Fig. 4.)

A. AC OPERATION

Insert the power cord into any convenient AC power outlet of the proper rating. If in doubt about your power source, contact your local power company before plugging in the receiver. The wrong power source can cause serious damage.

IMPORTANT: The receiver will not operate from an AC source unless the JUMPER PLUG is inserted in the DC POWER SOCKET. (See Fig. 4.)

B. DC OPERATION

The receiver may be operated from an external DC source, such as a vibrator power supply or batteries by removing the JUMPER PLUG normally located in the DC POWER SOCKET at the rear of the receiver and replacing it with a similar octal plug wired as shown in Fig. 5. This plug is available from your Hallicrafters dealer under Part. No. 35A003. The voltage and current requirements for DC operation are as follows: "B" supply, 280 volts at 105 ma; "A" supply, 6.3 volts at 4.1 amps.

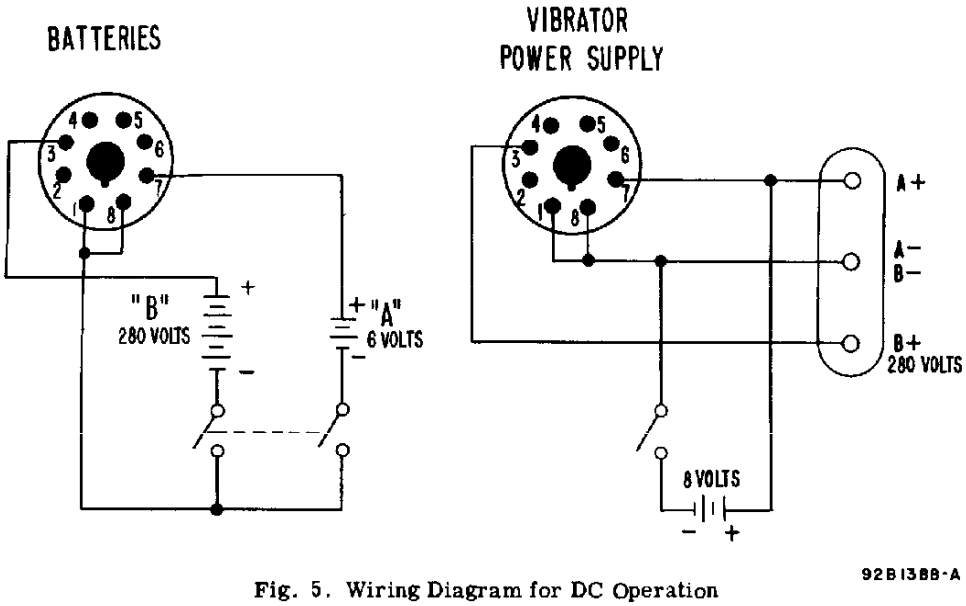

Fig. 5. Wiring Diagram for DC Operation

2-5. SPEAKER

A three-terminal strip, marked "G", "3.2" and "500", is provided at the rear of the receiver for connecting the external speaker that is required with the receiver. (See Fig. 4.) Any permanent magnet speaker with a 3.2-ohm voice coil can be used by simply connecting the two leads from the speaker voice coil to the terminals marked "3.2" and "G". If it is desired to use a speaker with a voice coil impedance other than 3.2 ohms, a matching transformer should be employed to insure optimum performance. The transformer should be mounted on or near the speaker, and should have a 5 watt power rating, a 500-ohm primary impedance, and a secondary impedance to match the impedance of the speaker voice coil. Connect the primary of the transformer to the terminals marked "500" and "G" and the secondary to the speaker voice coil terminals.

The Hallicrafters R-46 and R-46A speakers are both designed for use with your receiver. The R-46 connects to the terminals marked "500" and "G"; the R-46A connects to the terminals marked "3.2" and "G".

2-6. HEADPHONES

The headphone jack, marked PHONE, is located on the front panel of the receiver and is wired so that the speaker is automatically silenced when the headphones are plugged in. The headphone output impedance is not critical, and any commercial low-impedance headphones ranging from 50 ohms to 5000 ohms will provide satisfactory performance.

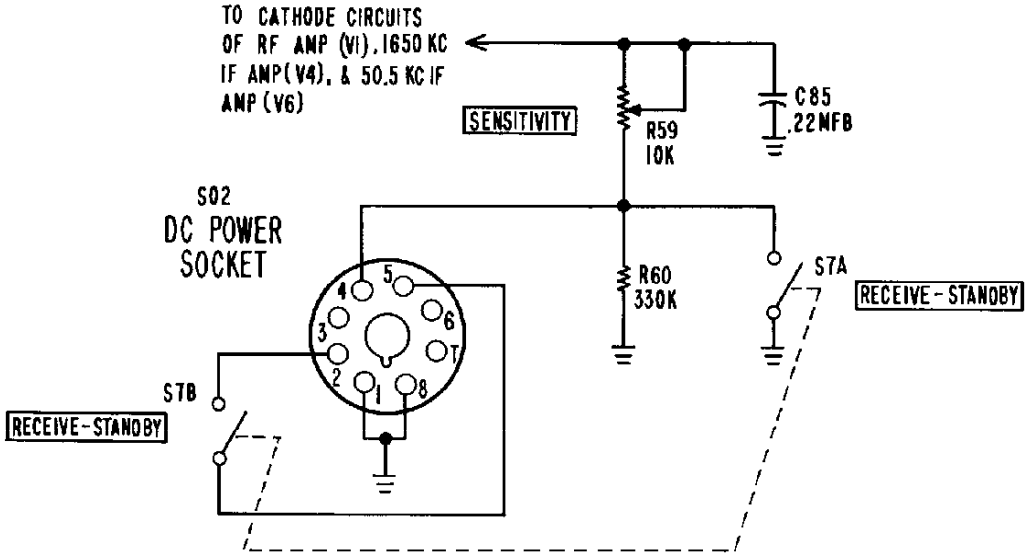

Fig. 6. Schematic Diagram of Sensitivity and Receive-Standby Circuits

2-7. RECORD PLAYER CONNECTIONS

A phono jack is provided at the rear of your receiver for attaching a record player. (See Fig. 4.) Any record player using a crystal cartridge, or a magnetic cartridge with a suitable pre-amplifier, will provide satisfactory results. For phono operation, insert the pin-plug from the record player or pre-amplifier into the phono jack and set the SELECTIVITY control on the front panel at "PHONO". Adjust the VOLUME control for the desired volume level and set the RESPONSE control at either "NORMAL" or "TREBLE CUT" for the desired tone. The remaining controls are inoperative and will have no effect on phono operation.

2-8. RELAY AND TRANSMITTER SWITCHING

One half of the dpst RECEIVE-STANDBY switch on the front panel connects to pins 2 and 5 of the DC POWER SOCKET at the rear of the receiver, and is available for transmitter switching. (See Fig. 6.) This half of the switch is in the open position when the RECEIVE-STANDBY switch is set at "STANDBY" and closed when set at "RECEIVE".

2-9. REMOTE RECEIVE-STANDBY SWITCH

The receiver may be disabled from a remote location by connecting a remote spst switch between pins 1 and 4 of the JUMPER PLUG located in the DC POWER SOCKET at the rear of the receiver. (See Figs. 4 and 6.). To operate the receiver with the remote switch, the RECEIVE-STANDBY switch on the front panel must he left at "STANDBY".

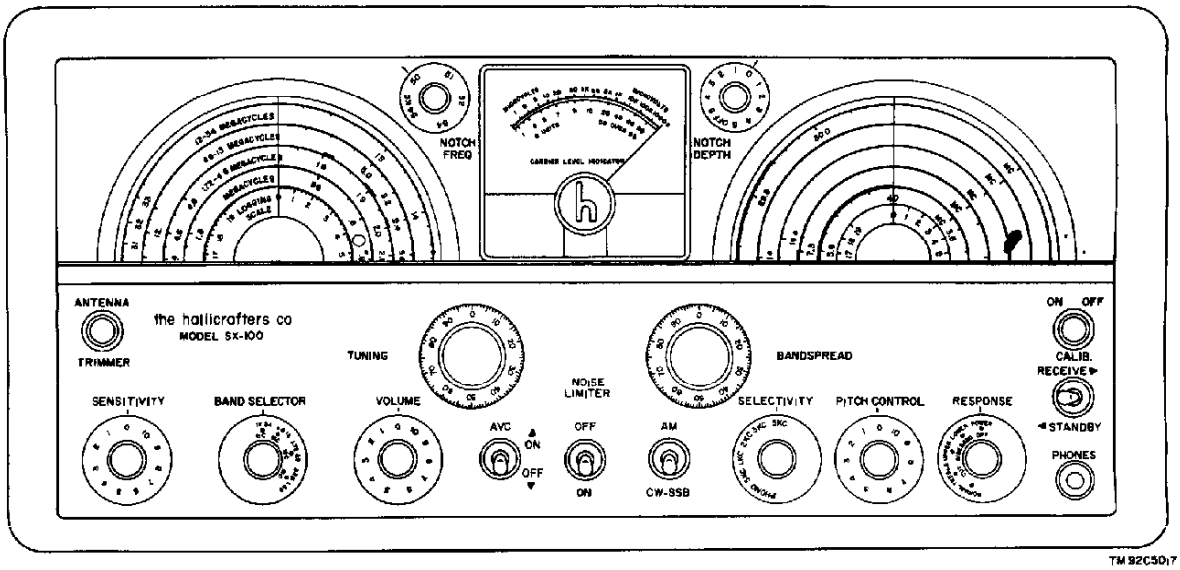

Fig. 7. Operating Controls

SECTION 3.
FUNCTION OF OPERATING CONTROLS

3-1. SENSITIVITY CONTROL

The SENSITIVITY control varies the gain of the RF amplifier, 1650 kc IF amplifier, and 50.5 kc IF amplifier stages. Maximum sensitivity is obtained with the control set at "10" (fully clockwise). In this position, the tubes heing controlled are operated at maximum gain with minimum cathode bias. As the control is rotated counterclockwise, the bias on the tuhes increases with a resultant decrease in gain.

3-2. BAND SELECTOR CONTROL

The BAND SELECTOR control operates the band switch to place the proper set of coils and sections of the main and bandspread tuning capacitors into the circuit to cover the desired frequency range. The frequency range covered by each position of the BAND SELECTOR control is indicated directly on the control.

3-3. ANTENNA CONTROL

The ANTENNA TRIMMER control operates a variable capacitor connected across the secondary of the antenna coil of the band in use. This capacitor adjustment compensates for loading effects of various types of antenna installations. The control is normally adjusted for maximum signal with the MAIN TUNING control adjusted to the high end of the band in use. With most antenna systems, the ANTENNA TRIMMER control requires no further adjustment until the BAND SELECTOR control is operated to select another band.

3-4. VOLUME CONTROL

The VOLUME control adjusts the audio level at the speaker terminals and PHONE jack. Clockwise rotation of the control increases the signal applied to the grid of the audio amplifier tube, thus increasing receiver volume; counter-clockwise rotation decreases volume.

3-5. AVC SWITCH

The AVC switch, when set at "ON", places the AVC circuit in operation to maintain the output level of the receiver constant regardless of normal input-signal variations. AVC voltage is applied to the RF amplifier stage and the 1650 kc IF amplifier stage. Since delayed AVC is employed in the receiver, the AVC circuit does not come into operation (i.e., it is delayed) until the carrier strength reaches a pre-determined level. The result is that no AVC voltage is applied to the grids of the controlled stages until the required carrier strength is reached. With this arrangement, the AVC bias on the controlled tubes is zero until the peak voltage applied to the plate of the AVC diode exceeds the delay voltage applied to its cathode. Thus, the AVC circuit offers very effective control on average and strong signals and yet maintains full receiver sensitivity on weak signals.

3-6. NOISE LIMITER SWITCH

This switch, when set at "ON", places the automatic series noise limiter circuit in operation to reduce pulse type noise such as ignition noise and electrical interference. The limiter circuit allows the signal to pass through the receiver unaffected, but makes the receiver inoperative for noise amplitudes greater than those of the signal. It will work equally well on AM or CW signals and is self-adjusting, i.e., it automatically adjusts itself to the signal level.

The noise limiter circuit "chops" noise peaks received at the detector by means of a biased diode which becomes non-conducting above a predetermined signal level. When the limiter circuit is in operation, the audio output of the detector must pass through the limiter diode to the grid of the audio amplifier. The limiter diode normally acts as a conductor for the audio signal as long as the diode plate is positive with respect to its cathode. When a noise peak is higher in amplitude than the signal, it instantaneously swings the cathode positive with respect to the plate, conduction ceases, and that portion of the signal is automatically cut off from the audio amplifier. The point at which the limiter diode becomes non-conducting is made sufficiently high so that the diode will not clip modulation peaks and thus impair intelligibility, but yet low enough to limit the noise peaks effectively.

3-7. AM/CW-SSB SWITCH

This switch, when set at "CW-SSB", applies plate voltage to the beat frequency oscillator (BFO) to render it operative for the reception of CW or single-sideband signals. The beat frequency oscillator employs a Hartley oscillator circuit and is voltage regulated to insure highly stable operation. The "AM" position of the AM/CW-SSB switch disables the BFO for normal reception of standard broadcast and AM phone signals.

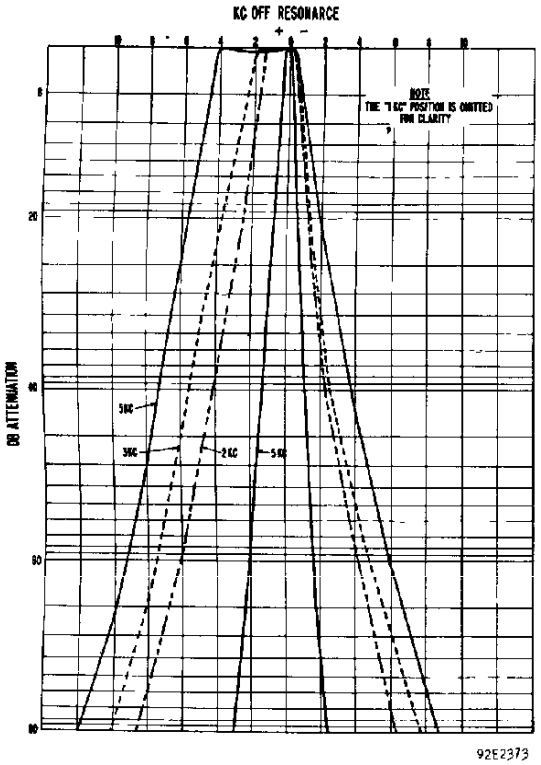

Fig. 8. IF Selectivity Curves

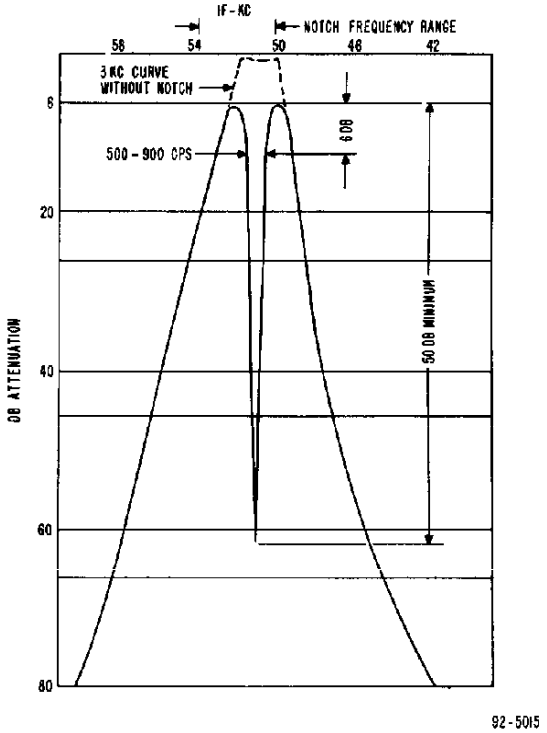

Fig. 9. IF Selectivity Curve with Notch

3-8. SELECTIVITY CONTROL

The SELECTIVITY control is used to vary the selectivity of the receiver to fit receiving conditions. Five degrees of selectivity are available, ranging from 500 cycles, for CW reception under crowded band conditions, io 5 kilocycles for maximum fidelity for broadcast reception. The five selectivity positions are shown on the SELECTIVITY conirol and indicate receiver seleciivity at 6 db down. A sixth position on the control, marked "PHONO", disables all the receiver circuits except the audio system for phonograph operation.

The recetver IF selectivity curves are shown in Fig. 8. Note that as the seleciivity is varied from a sharp to a broader position, the i-f passband noi only increases bui also centers about a higher frequency.

For broadcast reception, the SELECTIVITY control is normally set at "5 KC", the position affording broadest selectivity. Selectivity may be progressively increased by turning the control to the positions marked "3 KC", "2 KC", "1 KC", and "5 KC". For reception of the crowded amateur and shortwave bands, ii is generally advisable to sacrifice fidelity for greater selectivity, since the added seleciivity reduces both adjacent-channel interference and hackground noise by attenuating the higher audio frequencies. Too much selectivity on AM signals, however, will attenuate the high audio frequencies to such an extent that the signal may become unintelligible as a result of excessive side-band cutting. When receiving CW signals, the sharpest selectivity position may be used without the loss of intelligibility experienced in AM reception.

3-9. "T" NOTCH FILTER

The notch filter circuit provides a means of eliminating or reducing the interfering effect of certain types of heterodynes or CW signals. To obtain maximum results from this feature of your receiver the use of the two controls associated with the notch filter circuit are fully explained below.

GENERAL

The manner in which the notch filter will affect the i-f selectivity of the receiver is illustrated on page seven of your instruction book. As shown in Fig. 9 the filter will suppress an extremely narrow hand of frequencies within the i-f band pass range of the receiver. The effectiveness of this notch is many times greater than the notch of a quartz crystal filter at 400 kc to 2 mc. The NOTCH FREQUENCY control will move the band of suppressed frequencies represented by the notch in the selectivity curve, to any point within the i-f passband. The NOTCH DEPTH control will vary the depth of the notch in the selectivily curve to control the degree of rejection of the interfering signal.

Extensive field testing of this feature has shown that the notch filter is highly effective in suppressing the type of interference for which this type of circuit is intended. Ii must be appreciated, however, that any selective i-f filter circuit, including the phasing notch of quartz crystal circuits, affects only a limited range of interfering frequencies. The effectiveness of the notch filter is therefore somewhat dependent upon the exact nature of the inierfering signal. For example: a heterodyne within the i-f range that ts less than 900 cycles in width and has little harmonic conteni is readily notched out. If the same interfering heterodyne is rich in harmonics tt would only be possible to completely suppress the fundamental frequency and the remaining harmonic content may remain almost equally objectionable. It logically follows that if two interfering heterodynes should appear within the i-f pass hand that are separated in frequency by more than 500 to 900 cycles it would be possible to notch out only one of the heterodynes. The interfering signal may also vary in frequency beyond the range of the notch filter and thus reduce the effectiveness of the circuit. Under these conditions, increasing selectivity will generally eliminate its heterodyne. If this heterodyne interference varies in frequency about some mean value it may be necessary to offset the notch depth control to increase the broadness of the notch. It has been found, however, that the notch filter is sofficiently effective in many instances to make an otherwise useless signal entirely readable.

3-10. USE OF CONTROLS

To activate the Notch Filter circuit advance the NOTCH DEPTH control from the "OFF" position.

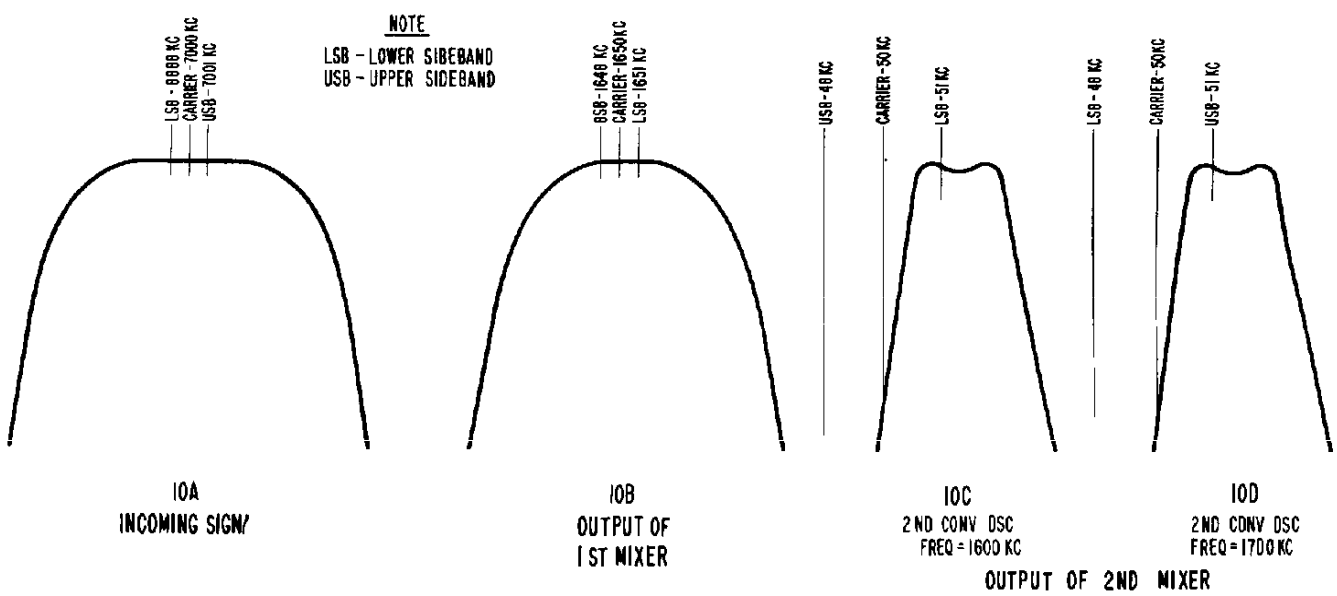

Fig. 10. Selectable-Sideband Response Curves

NOTCH FREQUENCY CONTROL — This control tunes the notch in the i-f pass band and may be set anywhere in the range of from 50 kc to 54 kc. The approximate frequency is calibrated on the knob skirt. While tuning this control for maximum suppression of the interfering heterodyne with minimum distortion to the desired signal, try to visualize the notch moving across the selectivity curve, Fig. 9. It is then readily apparent that improper tuning may notch out the desired signal instead of the heterodyne. It may be necessary to move the notch across the desired signal in order to reach the heterodyne that you desire to suppress. The important consideration is to tune the NOTCH FREQUENCY control for maximum heterodyne suppression with minimum distortion to the desired signal.

NOTCH DEPTH CONTROL — As the position of the NOTCH FREQUENCY control is changed, the depth of the notch will vary. The NOTCH DEPTH control is provided to retune the notch for maximum depth at any setting of the NOTCH FREQUENCY control Maximum notching occurs at the "0" setting when the frequency is set to the center of the i-f pass band. The use of the NOTCI DEPTH control is simply a matter of tuning it for maximum suppression each time the position of the NOTCH FREQUENCY control is changed.

3-11. PITCH CONTROL

The PITCH CONTROL operates the tuning slug in the BFO coil to vary the frequency of beat frequency oscillator approximately 2 kc each side of its center frequency of 50 kc. The primary function of the PITCH CONTROL is to vary the pitch of the audible beat note when receiving CW signals. It is also used when receiving single-sideband signals to vary the frequency of the reinserted carrier in the receiver.

3-12. RESPONSE CONTROL

The RESPONSE control performs three functions: (1) it turns the receiver on and off, (2) it switches the 2nd conversion oscillator to operate at the required frequency for reception of CW, AM, and single-sideband signals (1600 kc in the "LOWER SIDEBAND" position and 1700 kc in the "UPPER SIDEBAND", "TREBLE CUT", and "NORMAL" positions), and (3) it serves as a two-position tone control for AM reception and phono operation.

In the "POWER OFF" position, the receiver is inoperative. As the control is turned clockwise to any of the other four positions, the receiver is turned on.

The "LOWER SIDEBAND" and "UPPER SIDEBAND" positions of the control are used when receiving single-sideband signals or when it is desired to receive only one sideband of an AM signal.

The "TREBLE CUT" and "NORMAL" positions are used for phono operation and for normal AM reception where both sidebands are received. In the "NORMAL" position, the audio response is essentially flat at the low- and mid-frequencies and slightly attenuated at the high frequencies. The response in the "TREBLE CUT" position is essentially the same except that the high frequencies are attenuated considerably more than in the "NORMAL" position.

For CW reception, the setting of the RESPONSE control is immaterial although a slight improvement in signal-to-noise ratio will be obtained in the "LOWER SIDEBAND" and "UPPER SIDEBAND" positions.

To illustrate how selectable sideband reception is accomplished in the receiver, a numerical example is given. Consider an incoming signal at 7000 kc, modulated 1 kc. Since modulation of a carrier causes the generation of sideband frequeacies numerically equal to the carrier frequency plus or minus the modulation frequency, the incoming signal consists of the carrier at 7000 kc, a lower sideband at 6999 kc, and an upper sideband at 7001 kc. (See Fig. 10A.)

The incoming signal is first heterodyned with the output of the 1st conversion oscillator in the 1st mixer stzge. The 1st conversion oscillator operates at a frequency higher than the incoming signal by an amount equal to the first-intermediatz frequency of 1650 kc. As a result of the frequency conversion process, three new lower frequencies are produced in the output of the 1st mixer: the carrier at 1650 kc, the lower sideband at 1651 kc, and the upper sideband at 1649 kc. (See Fig. 10B.) These signals are amplified by the 1650 kc IF amplifier stage and then heterodyned with the output of the 2nd conversion oscillator ia the 2nd mixer stage. The 2nd conversion oscillator is crystal controlled and can be set to operate at either 1600 kc for reception of the lower sideband or 1700 kc for the reception of the upper sideband, selection being made by means of the RESPONSE control. When the RESPONSE control is set at "LOWER SIDEBAND", the 1600 kc signal from the 2nd conversion oscillator is heterodyned with the incoming signal at the first-intermediate frequency of 1650 kc to produce three new frequencies: the carrier at 60 kc, the lower sideband at 51 kc, and the upper sideband at 49 kc. By referring to Fig. 10C, it can be seen that the lower sideband falls within the i-f passband and the upper sideband falls outside of the passband. Thus the lower sideband is accepted and the upper sideband is rejected. When the RESPONSE control is set at "UPPER SIDEBAND", the 1700 kc signal from the 2nd conversion oscillator is heterodyned with the incoming signal. In the frequency conversion process, the carrier still remains at 50 kc, but now the upper sideband appears at 51 kc, and the lower sideband appears at 49 kc. (See Fig. 10D.) Thus, the upper sideband is accepted and the lower sideband is rejected.

3-13. CALIB. ON-OFF SWITCH

The CALIB. ON-OFF switch controls the operation of the built-in crystzl calibrator. When the switch is sst at "ON", the crystal calibrator is turned on to provide marker signals at every 100 kc on the dial. The crystal calibrator employs a crystal controlled, peatode oscillator circuit. The output of the crystal calibrator is capacitively coupled to the antenna input circuit. A trimmer capacitor, adjustable by the CRYSTAL ADJ control on the top of the calibrator unit, permits adjustment of the calibrating crystzl io exactly 100 kc by comparison with the frequencies transmitted by WWV. This capacitor has been set at the factory and should normally not require periodic readjustment unless extreme calibration accuracy is required. If adjustment is required, proceed as outlined in Section 4-8.

3-14. RECEIVE-STANDBY SWITCH

The RECEIVE-STANDBY switch, normally set at "RECEIVE", permits disabling of the receiver during transmission periods, at the same time maintaining the heater and plate supplies operative for instant use when reception is again resumed. The receiver is disabled by setting the RECEIVE-STANDBY switch at "STANDBY".

One section of the RECEIVE-STANDBY switch is available for relay or transmitter switching. For connections and details, refer to Section 2-8.

3-15. TUNING and BANDSPREAD CONTROLS

The TUNING and BANDSPREAD controls are used in conjunction with one another to tune in the desired signal. Wide tuning is performed with the TUNING control and fine tuning with the BANDSPREAD control.

Main Tuning Dial. The main tuning or left-hand dial is operated by the TUNING control. This dial has four calibrated scales, one for each of the four frequency bands covered by the receiver. It also contains a hundreds scale, used with the unit scale on the MAIN TUNING knob, for accurately logging and relocating stations of special interest. The logging number is the logging number on the dial plus the number on the knob scale. For example; if the main tuning dial logging scale reads 12, and the MAIN TUNING control knob scale reads 25, the logging number is 1225. For normal tuning, the main tuning dial is set for the desired station frequency after the BANDSPREAD control has been set fully counterclockwise (bandspread tuning capacitor set at minimum capacity).

IMPORTANT: The readings on the main tuning dial will correspond to the station frequencies only if the BANDSPREAD control is set fully counterclockwise. If it is set at any other setting, the additional bandspread capacity added to the main tuning capacity will throw off the main tuning dial calibration because the receiver has been calibrated with the bandspread tuning capacitor set at minimum capacity.

The dial settings for the 80, 40, 20, 15, and 11-10 meter amateur bands are indicated on the main tuning dial by white dots. When tuning the amateur bands with the bandspread dial, the main tuning dial must be set at the dot corresponding to the desired amateur band. The 160 meter amateur band is indicated on the dial by three short double-weight lines.

NOTE

The broadcast band is marked with a "CD" emblem and a dot at .64 and 1.24 megacycles to indicate the two official civil defense frequencies. In a civil defense emergency, tune to either of these two frequencies for official defense news, instructions, and information.

Bandspread Dial. The bandspread or right-hand dial is operated by the BANDSPREAD control. This dial contains five scales calibrated for the 80, 40, 20, 15, and 11-10 meter amateur bands. These five scales are calibrated to read receiver frequency directly when the main tuning dial has been set to the index dot of the desired amateur band. It also contains a hundreds scale for logging purposes. The logging procedure for the bandspread dial is the same as for the main tuning dial. For convenience in tuning, the AM phone bands are indicated on the bandspread dial by double-weight lines.

In addition to its use on the amateur bands, the bandspread dial may also be utilized as a fine tuning adjustment over any portion of the receiver tuning range. Two methods of fine tuning are described below.

a. The first method of fine tuning is used when it is desired to tune in a single signal with precision accuracy. First the BANDSPREAD control is set a few degrees from its full counterclockwise position, then the desired signal is located with the TUNING control, and finally the signal is accurately tuned in by "rocking" the BANDSPREAD control (turning it slightly to the left and right) until the signal is loudest and clearest.

b. The second method of fine tuning is used when it is desired to tune through a range of frequencies, such as a group of shortwave stations. Set the BANDSPREAD control fully counterclockwise, set the TUNING control for the high end of the selected range of frequencies, and then tune through the range with the BANDSPREAD control. Turning the BANDSPREAD control clockwise tunes the receiver progressively lower in frequency.

SECTION 4-
OPERATION

4-1. AM RECEPTION

1. Set the front panel controls to their starting positions as outlined below.

SENSITIVITY	10 (maximum sensitivity)	SELECTIVITY	5 KC
BAND SELECTOR	At the desired band.	RESPONSE	POWER OFF
VOLUME	0 (minimum volume)	RECEIVE-STANDBY	RECEIVE
AVC ON-OFF	ON	NOTCH DEPTH	OFF
NOISE LIMITER OFF-ON	OFF	CALIB. ON-OFF	OFF
AM/CW-SSB	AM		

2. Turn the receiver on by rotating the RESPONSE control clockwise and set it at either the "NORMAL" or "TREBLE CUT" position. The tuning dials will light up indicating the receiver is operative. Rotate the VOLUME control clockwise for the desired volume level.

3. Set the bandspread tuning gang at minimum capacity by rotating the BANDSPREAD control fully counterclockwise. To utilize the BANDSPREAD control as a fine tuning adjustment for the amateur and shortwave bands, refer to Section 3-15.

IMPORTANT

The calibration on the main tuning (left-hand) dial will be correct only if the bandspread tuning gang is set at minimum capacity. If it is set at any other setting, the additional bandspread capacity added to the main tuning capacity will throw off the main tuning dial calibration because the receiver has been calibrated with bandspread tuning gang set at minimum capacity.

4. Tune in the desired signal with the TUNING control, tuning for maximum indication on the "S" meter. After the signal has been accurately tuned in, readjust the VOLUME control as desired.

   NOTE: The "S" meter indications will be correct only when the AVC switch is set at "ON", and the SENSITIVITY control is set at "10" (maximum sensitivity). Setting the SENSITIVITY control at a setting other than "10" will also somewhat restrict AVC action.

5. Set the SELECTIVITY control for the desired degree of selectivity. For standard broadcast reception (Band 1), the control is normally set to "5 KC" for maximum fidelity. The positions marked "3 KC", "2 KC", "1 KC", ".5 KC" provide progressively increasing steps of selectivity. Note that as the selectivity of the receiver is increased, the background noise and interference from adjacent signals is reduced. Too much selectivity, however, may cause excessive side-band cutting. While side-band cutting reduces fidelity, it may be frequently preferable to sacrifice naturalness of reproduction in favor of communications effectiveness. When changing the position of the SELECTIVITY control from a broad to a narrower response (for example: from "2 KC" to "1 KC"), a slight readjustment of the tuning controls may be necessary to recenter the signal in the i-f passband.

6. Set the RESPONSE control at either "NORMAL" or "TREBLE CUT" for the desired tonal quality.

7. If it is desired to operate with AVC off, set the AVC switch at "OFF", set the VOLUME control to a well advanced position, and vary the receiver volume level by means of the SENSITIVITY control, taking care not to advance the control to a point where strong signals will cause "blocking".

8. If severe electrical disturbances or ignition or other types of pulse type noise interfere with reception, set the NOISE LIMITER switch at "ON" to place the automatic noise limiter circuit in operation.

9. The receiver may be disabled without turning it off by setting the RECEIVE-STANDBY switch at "STANDBY". In this position, the r-f and 50.5 kc i-f stages are cut off but the heater and plate supplies remain operative for instant reception. To resume reception, simply return the switch to the "RECEIVE" position.

10. An undesired signal close in frequency to a desired signal will heterodyne with it to produce an audible beat note equal to their frequency difference. This type of heterodyne interference can be eliminated by utilizing the selectable sideband feature of the receiver to position the undesired signal out of the i-f passband. The detailed procedure for eliminating heterodyne interference is as follows:

    a. Set the AM/CW-SSB switch at "CW-SSB", the PITCH CONTROL to "0", and the RESPONSE control at either "LOWER SIDEBAND" or "UPPER SIDEBAND".

    b. Carefully tune in the desired signal for "zero beat". Then set the AM/CW-SSB switch at "AM".

    c. If the RESPONSE control has been set to the proper sideband position, the heterodyne interference will be eliminated. If the interference is still present, simply switch the RESPONSE control to the opposite sideband position.

11. An alternate method of eliminating an interfering signal is to use the notch filter circuit. Simply rotate the NOTCH DEPTH control clockwise to "O" and adjust the NOTCH FREQ conirol to "notch out" the interfering signal. Readjust the NOTCH DEPTH control as necessary to obtain maximum rejection of the interfering signal.

CAUTION

It is possible to eliminate the heterodyne by notching out the desired carrier in place of the undesired signal or carrier. When this occurs an AM signal will sound like a single sideband suppressed carrier transmission.

12. In shortwave reception, it frequently happens that transmission conditions are different for waves of slightly different frequencies. As a result, in the case of voice-modnlated transmissions, which involve sideband frequencies differing slightly from the carrier frequency, the carrier and sideband components may not be received in the same relative amplitude and pbases they had at the transmitter. This effect, known as selective fading, causes severe distortion of the signal. This type of distortion can he reduced somewhat by tuning the receiver to accept only one of the two sidebands being transmitted as outlined in Steps 10(a) and (b) above. After tuning is completed, switch the RESPONSE control from "LOWER SIDEBAND" to "UPPER SIDEBAND" and leave it in the position providing the least distortion.

4-2. CW RECEPTION

For CW reception, the receiver may be operated with AVC on or off, as desired. Operation of the receiver with AVC on is highly desirable since it not only minimizes fading but also prevents blasting when tuning from a weak to a

strong signal. To operate with AVC on, set the AVC switch at "ON", set the SENSITIVITY control to a well advanced position, and regulate the receiver volume level by means of the VOLUME control. To operate with AVC off, set the AVC switch at "OFF", set the volume control at a well advanced position, and vary the receiver volume level by means of the SENSITIVITY control, taking care not to advance the control to a point where strong signals cause excessive "thumping" (overloading).

CW signals are made audible by the heterodyning action of the beat oscillator with the incoming signal. The beat oscillator is set at a frequency slightly different from the second-intermediate frequency of 50.5 kc, the difference being equal to the pitch of the audible note desired.

For the reception of CW signals, set the AM/CW-SSB switch at "CW-SSB", set the SELECTIVITY control at ".5 KC" (the sharpest selectivity position), set the RESPONSE control at "UPPER SIDEBAND", and set the PITCH CONTROL at any setting from "2" to "4" on either side of zero, and then tune in the signal for a pleasing beat note. The beat oscillator may be set on either the high- or low-frequency side of zero beat. (The oscillator operates on the low side when the PITCH CONTROL is set at a position to the left of zero and on the high side when the PITCH CONTROL is set at a position to the right of zero.) It may be necessary, after setting the PITCH CONTROL, to readjust the receiver tuning slightly to properly position the signal in the i-f passband. Alternately adjust the PITCH CONTROL and the receiver tuning for a maximum audible signal. With the receiver in the sharpest selectivity position, CW signals will drop in and out rapidly and a slow rate of tuning is recommended. Once the PITCH CONTROL has been set, it need not be reset for each CW signal.

NOTE

If a CW signal is tuned in with the SELECTIVITY control at a setting other than ".5 KC", it may be necessary to slightly readjust the receiver tuning when changing to a narrower selectivity position in order to properly position the signal in the i-f passband.

The setting of the SELECTIVITY control for CW reception is generally best determined by receiving conditions. Note that as the selectivity of the receiver is increased (SELECTIVITY control varied from the "5 KC" to the ".5 KC" position), the background noise and adjacent-channel interference is considerably reduced. For CW reception, the sharpest selectivity position may be used without the loss of intelligibility experienced in AM reception.

The automatic noise limiter circuit can be used to great advantage on CW reception, just as on AM reception, to reduce the effects of background noise and electrical interference. To place the noise limiter circuit in operation, set the NOISE LIMITER switch at "ON". The notch filter may be used to eliminate or attenuate an interfering signal during CW reception.

4-3. SINGLE SIDEBAND RECEPTION

Single-sideband signals are transmitted with little or no carrier, and it is necessary to reinsert the carrier in the receiver before proper reception is obtained. In the SX-100 receiver, this is accomplished in the 50.5 kc i-f system by injecting the beat oscillator signal at the input of the second-detector. A single-sideband signal can be identified by its unintelligibility and by a severe variation in the "S" meter indication corresponding to the speech modulation.

For the reception of single-sideband signals, set the PITCH control at "0", AVC switch at "ON", AM/CW-SSB switch at "CW-SSB", and SELECTIVITY control at either "1 KC" or "2 KC", depending upon adjacent channel interference and noise. Set the SENSITIVITY control at a well advanced position and vary the receiver volume level by means of the VOLUME control, taking care not to advance the SENSITIVITY control to a point where strong signals will cause distortion (overloading). Set the RESPONSE control at either "LOWER SIDEBAND" or "UPPER SIDEBAND". The single-sideband signal will be intelligible in only one of these two positions, the proper position depending upon the sideband being transmitted. If the signal is not intelligible after tuning is completed as outlined below, set the RESPONSE control to the other sideband setting and repeat the tuning procedure. It is suggested that the RESPONSE control be initially set at "LOWER SIDEBAND" since most single-sideband transmissions are of this type.

After the controls have been properly set as outlined in the preceding paragraph, very carefully tune in the single-sideband signal for maximum intelligibility. It will be noticed that with incorrect tuning of a single-sideband signal, the speech will sound high- or low-pitched or very distorted but no trouble should be had in tuning once a little experience has been gained.

The "1 KC" position of the SELECTIVITY control permits reception of modulation frequencies up to about 1000 cycles. For reception of modulating frequencies higher than 1000 cycles, set the SELECTIVITY control to the positions marked "2 KC", "3 KC" and "5 KC", depending on the degree of fidelity desired; maximum fidelity is obtained in the "5 KC" position. It is not necessary to retune the receiver when receiver selectivity is varied. The notch filter is especially useful during reception of single-sideband signals. An undesired AM or CW signal close in frequency to the desired signal will heterodyne with the beat oscillator to produce an audible beat. The undesired signal may be "notched out" with the notch filter, just as in AM or CW reception.

4-4. USE OF CRYSTAL CALIBRATOR

The built-in 100 kc crystal calibrator permits accurate checking of dial calibration over any portion of the main and bandspread tuning dials by a comparison of the dial calibrations with the marker signals which appear at every multiple of 100 kc on the dial.

A. CALIBRATION OF THE BANDSPREAD DIAL

1. Set the bandspread tuning dial at a convenient multiple of 100 kc at the high frequency end of the band in use. For

example: 2000 kc on 160M, 4000 kc on 80M, 7300 kc on 40M, 14,400 kc on 20M, 21,500 kc on 15M, and 29,800 kc on 10M. (The bandspread tuning dial is calibrated in kc.)

2. Set the main tuning dial to the index dot of the desired amateur band.

3. Set the AM/CW-SSB switch at "CW", the PITCH control at "O", and the CALIB. ON-OFF switch at "ON".

4. Very carefully adjust the main tuning control for exact frequency as indicated by "zero beat". The bandspread tuning dial is now accurately calibrated and a "zero beat" should be obtained at every multiple of 100 kc on the band in use. For example, on the 80 meter amateur band, a "zero beat" should be obtained at or close to 3500, 3600, 3700, 3800, 3900, and 4000 kc.

5. The procedure outlined in Steps 1 through 4 above provides average calibration accuracy over the entire frequency range of the band in use. For precise calibration accuracy over a particular section of the band, the procedure is identical except that the bandspread dial is set at a multiple of 100 kc near the desired frequency or range of frequencies, instead of at the high end of the band as in Step 1.

B. CALIBRATION OF THE MAIN TUNING DIAL

1. Turn the BANDSPREAD tuning control counterclockwise until the dial pointer is aligned with the index marks at the high frequency end of the dial.

2. Set the main tuning dial at a convenient multiple of 100 kc near the desired frequency or range of frequencies. (The main tuning dial is calibrated in mc.) To determine the nearest 100 kc multiple, simply remember that 100 kc is equal to one-tenth mc. For example, from 2.0 to 3.0 mc on band 2, the 100 kc multiples are 2.0 mc, 2.1 mc, 2.2 mc, 2.3 mc, etc.

3. Set the AN/CW-SSB switch at "CW", and the PITCH control to "O". Then set the CALIB. ON-OFF switch at "ON" and very carefully adjust the main TUNING control for a "zero beat". The main dial pointer should index with a 100 kc multiple on the dial.

4. If calibration is required, refer to steps 5 through 8 of the alignment procedure, Section 5-3.

4-5. USE OF "S" METER

The "S" meter provides a visual means of determining whether or not the receiver is properly tuned, as well as an indication of the relative signal strength. The "S" meter circuit consists of a DC milliammeter connected in series with the plate lead to the 1650 kc IF amplifier tube (V-4), the grid of which is controlled by AVC voltage. Since the grid current of this tube varies with the strength of the incoming signal, the meter will indicate relative signal strength. The "S" meter is calibrated in microvolts, "S" units from 1 to 9, and in decibels above S-9 to + 80 db. The indications on the "S" meter will he correct only when the SENSITIVITY control is set at "10" (maximum sensitivity), and the AVC switch is set at "ON".

The limitations of the microvolt scale should be fully apprectated before any assumption as to the indicated signal voltages is accepted. The meter indicates approximate mtcrovolts of signal strength as developed at the antenna input terminals when terminated in a 300-ohm load, at 5.1 mc. This approximation will have a variatton of ± 5 db on a new receiver and, obviously, as the tubes age the variations may be greater. The indtcated microvolt readtngs at 30, 7, and 3.5 mc will vary approximately ± 3 db from that at 5.1 mc. Also, all readings 50 microvolts or less will be more accurate and correlate more closely than those htgher.

Variations in the microvolt indications between receivers is not indicative of the overall sensitivity but is caused by normal tolerances in vacuum tube conductances which are reflected as variations in the AVC/"S" Meier curve. Thus, two receivers with identical sensitivities could, under the same signal conditions indicate signal levels of 5 microvolts and 25 microvolts and yet each be a perfect receiver.

4-6. BFO FREQUENCY CHECK

The beat frequency oscillator (BFO) has been carefully adjusted at the factory so that its frequency is 50 kc when the PITCH CONTROL knob is set at "0". Readjustment of the BFO will normally not be required unless the 6SC7 BFO tube (V-8) or components in the BFO circuit have been replaced. A slight readjustment may sometimes be necessary as a result of normal aging of the BFO tube. A simple check can be made to determine if adjustment is necessary as follows:

With the AM/CW-SSB switch at "CW-SSB", SELECTIVITY control at "5 KC", RESPONSE control at "UPPER SIDEBAND", and PITCH CONTROL at "0",very carefully tune in an AM signal for "zero beat". (See Note A below.) Leaving the receiver tuning unchanged, switch the RESPONSE control to the "LOWER SIDEBAND" position. If the beat oscillator frequency is correct, a "zero heat" will be obtained in both the "UPPER SIDEBAND" and "LOWER SIDEBAND" positions. If, however, the beat oscillator is slightly off frequency, a beat note will be heard when switching from the "UPPER SIDEBAND" to the "LOWER SIDEBAND" position. Adjustment of the beat frequency oscillator is necessary only if the frequency of the audible beat note exceeds 200 cycles.

Note A - In instances where the beat oscillator is considerably off frequency, it may not be possible to obtain a "zero beat" when tuning in the signal. In this case, it will be necessary to first "roughly" set the beat oscillator to operate at approximately 50 kc as follows: With the AM/CW-SSB switch at "CW-SSB", SELECTIVITY control at

".5 KC", and RESPONSE control at "UPPER SIDEBAND", tune the receiver to a noisy part of the band (not to a signal). Remove the PITCH CONTROL knob and adjust the BFO slug for minimum noise on the noise signal. Then set the SELECTIVITY control at "5 KC" and make the BFO frequency check as outlined in the preceding paragraph.

If the BFO frequency check indicates adjustment is necessary, proceed as follows:

Remove the PITCH CONTROL knob and turn the BFO slug a few degrees to the left or right so as to lower the beat note frequency, and repeat the BFO frequency check. If the beat note obtained is higher in frequency than that obtained originally, it is an indication that the slug is being turned in the wrong direction Continue varying the setting of the slug in small steps and repeating the BFO frequency check until "zero beat" is obtained in both the "UPPER SIDEBAND" and "LOWER SIDEBAND" positions. After the correct slug setting is determined, replace the PITCH CONTROL knob with "0" in the top center position, being careful not to disturb the slug setting.

4-7. NOTCH FREQUENCY CHECK

Readjustment of the notch filter circuit is not normally necessary unless the components in the notch filter circuit are replaced. To check the circuit, proceed as follows:

Check the BFO frequency as instructed in Section 4-6. Set the PITCH CONTROL at "O", AVC to "ON" and the SELECTIVITY control at "3 kc". Tune in an unmodulated carrier, from a station or a signal generator, for a "zero beat". Place the AM/CW-SSB switch in the AM position to de-energize the BFO. Rotate the NOTCH DEPTH control to "O". Tune the NOTCH FREQ for a minimum reading on the "S" meter. The NOTCH FREQ dial should be set at "50" kc.

If the notch frequency check indicates that an adjustment is necessary, proceed as follows:

Loosen the NOTCH FREQ knob and reset it to indicate "50" kc. Rotate the control to approximately "51" kc. Tune across an unmodulated carrier while observing the "S" meter. (Use an approximate S-9 signal.) The meter will indicate two peaks. Readjust the NOTCH FREQ control as necessary to approximately equalize the peaks. Then tune the receiver for a minimum reading on the "S" meter between the two peaks. Adjust R75, located on the side of the notch filter chassis, for a minimum reading on the "S" meter. Refer to Fig. 11 for the location of R75.

4-8. CRYSTAL CALIBRATOR CHECK

The CRYSTAL ADJ control on the calibrator chassis operates a trimmer capacitor connected across the 100 kc calibrating crystal. This trimmer capacitor permits adjustment of the calibrating crystal to exactly 100 kc by comparison with the frequencies transmitted by station WWV. This capacitor has been set at the factory and should not require periodic readjustment unless extreme calibration accuracy is desired. If adjustment is required, proceed as outlined below.

Set the RESPONSE switch to "NOR", the CALIB. ON-OFF switch at "OFF", and all other front panel controls as for normal AM reception. Tune in station WWV on any one of its operating frequencies (2.5, 5, 10, 20, or 25 mc) and wait for the period during which the signal from WWV is unmodulated. Then switch on the crystal calibrator by setting the CALIB. ON-OFF switch at "ON" and adjust its frequency, by means of the CRYSTAL ADJ control, until the crystal calibrator signal "zero beats" with the signal received from WWV. If the adjustment is attempted during periods that WWV is modulated, an erroneous zero beat may be obtained with the modulating frequency instead of the desired carrier frequency.

4-9. SERVICE OR OPERATING QUESTIONS

For any further information regarding operation or servicing of your receiver, contact your Hallicrafters dealer. The Hallicrafters Company maintains an extensive system of Authorized Service Centers where any required service will be performed promptly and efficiently at a nominal charge. All Hallicrafters Authorized Service Centers display the sign shown at the right. For the location of the one nearest you, consult your local dealer or telephone directory. Make no service shipments to the factory as the Hallicrafters Company will not accept the responsibility for unauthorized shipments.

The Hallicrafters Company reserves the privilege of making revisions in current production of equipment and assumes no obligation to incorporate these revisions in earlier models.

Authorized hallicrafters Service Center
communications equipment

92X1401-C

SECTION 5.
ALIGNMENT

This receiver has been carefully aligned at the factory by specially trained personnel using precision equipment. Alignment of the receiver should not be attempted until all other possible causes of faulty operation have been investigated. Alignment should not be required unless the receiver has been tampered with or component parts have been replaced in the r-f or i-f stages. Alignment should be made only by persons familiar with communications receivers and experienced in their alignment. Refer to Figs. 11 and 12 for location of all alignment adjustments.

5-1. EQUIPMENT REQUIRED

1. Signal generator covering 50 kc to 30 mc.
2. Vacuum tube voltmeter (VTVM) or other high impedance DC voltmeter.
3. Output meter (or AC scale of VTVM). Connect output meter to appropriate speaker output terminals. If a VTVM is used, connect it to terminals "500" and "G" and terminate the output with a dummy load.

5-2. INITIAL CONTROL SETTINGS

Band Selector . . . . . As indicated in chart
Sensitivity and Volume . . . . . 10 (maximum)
AVC and Noise Limiter . . . . . Off
AM/CW-SSB . . . . . AM
Selectivity . . . . . As indicated in chart
Response . . . . . Lower Sideband
Standby-Receive . . . . . Receive
Tuning and Bandspread . . . . . Gangs half meshed
Notch Depth . . . . . Off

5-3. ALIGNMENT PROCEDURE

Step	Signal Generator Connections	Signal Generator Frequency	Band Selector Setting	Output Connections	Selectivity Setting	Remarks
			50.5 KC IF ALIGNMENT			
1	High side directly to alignment point "A" (terminal 1 of T2). See Fig. 12. Low side to chassis.	50.5 KC (unmod.)	.538 - 1.58 MC	VTVM DC probe to alignment point "B" (junction of R48, R49, and C81). See Fig. 12. Common to chassis.	.5 KC	Remove 1st conv. oscillator tube V3 from its socket to prevent signal interference. Adjust top slug of T3, T4, T5, and T6 (50.5 KC IF's) for maximum indication, maintaining approx. 1 volt reading on VTVM.
			ALIGNMENT OF 1600 KC 2nd CONV. OSC. & 1650 KC IF'S			
2	High side directly to alignment point "C" (stator of section C1B of main tuning gang). Low side to frame of gang.	1650 KC (mod)	"	Output meter across appropriate speaker terminals. (VTVM to alignment point "B" if it is desired to monitor detector voltage.)	5 KC	Replace V3 removed in Step 1. Tune generator slowly thru 1650 KC to determine IF passband. Then set generator to center of passband, using sufficient generator output to obtain approx. 1/2 watt receiver output. If no output is obtained, the 1600 KC crystal oscillator may not be oscillating and it will be necessary to turn up the generator output and adjust the 1600 KC crystal activity adjustment (top slug of T9) until output is obtained. Adjust for maximum output by adjusting the signal generator frequency, crystal activity (top slug of T9) and the 1650 KC IF's (top and bottom slugs of T1 and T2). Note that the signal suddenly disappears when the crystal activity slug is turned into the coil and gradually drops in level when the slug is backed out of the coil. Set the crystal activity adjustment (top of slug of T9) for half output on the gentle slope side of maximum response. Then set the generator as near the center of the IF passband as possible and adjust the top and bottom slugs of T1 and T2 for maximum response. Tune through the passband and observe the shape of the response. If it is symmetrical, the adjustment is completed; if not, reset the generator frequency near the center of the passband and repeak T1 and T2.
			ALIGNMENT OF 1700 KC 2nd CONV. OSC.			
3	"	"	"	"	"	Set RESPONSE control at "UPPER SIDEBAND". Tune generator slowly thru 1650 KC to determine IF passband. Then set generator to center of passband, using sufficient generator output to obtain approx. 1/2 watt receiver output. If no output is obtained, the 1700 KC crystal oscillator may not be oscillating and it will be necessary to turn up the generator output and adjust the 1700 KC crystal activity adjustment (bottom slug of T9) until output is obtained. Adjust for maximum output by adjusting the signal generator frequency and the crystal activity (bottom slug of T9). Note that the signal suddenly disappears when the crystal activity slug is turned into the coil and gradually drops in level when the slug is backed out of the coil. Set the crystal activity adjustment (bottom sing of T9) for half output on the gentle slope side of maximum response.

	IF SENSITIVITY CHECK
4	With the generator modulated 30% at 400 cycles and connected thru a .05 mfd capacitor to the grid (pin 1) of the 1st mixer tube V2, the IF input required for 1/2 watt receiver output should be approximately 20 microvolts. Thia assumes the crystal activity is set for half of maximum response as outlined in Steps 2 and 3 above.

RF ALIGNMENT

- Before proceeding with the RF alignment, check the tuning dials for proper indexing. Both dials should index on the marks at the low frequency end with the gang fully closed.
- Use an amplitude modulated signal.
- Set the SENSITIVITY and VOLUME at "10" (maximum), AVC and NOISE LIMITER at "OFF" SELECTIVITY at "2 KC", RESPONSE at "LOWER SIDEBAND", RECEIVE-STANDBY at "RECEIVE, and BANDSPREAD" fully counter-clockwise.
- Connect the output meter across the appropriate speaker terminals. (Connect the VTVM to alignment point "B" if it is desired to monitor the detector voltage.) Maintain a 1/2 watt receiver output.
- Connect high side of generator thru 330-ohm carbon resistor to antenna terminal "A1". Low side to "A2". Connect jumper between "A2" and "G".
- The oscillator frequency is higher than the signal frequency on all bands.

Step	Band Selector Setting	Generator & Receiver Frequency	Adjust for Maximum
5	12 - 34 MC	30.0 MC	C66 (osc. trimmer), C40 (mixer trimmer), and C110 (antenna trimmer)
	"	14.0 MC	L11 (osc. slug), L8 (mixer slug), and L1 (antenna slug)
6	4.6 - 13 MC	11.5 MC	C59 (osc. trimmer), C42 (mixer trimmer), and C110 (antenna trimmer)
	"	5.1 MC	L12 (osc. slug), L9 (mixer slug), and L2 (antenna slug)
7	1.72 - 4.9 MC	4.6 MC	C56 (osc. trimmer), C44 (Mixer trimmer), and C110 (antenna trimmer)
	"	1.925 MC	L13 (osc. slug)
8	.538 - 1.58 MC	1.4 MC	C50 (osc. trimmer), C45 (mixer trimmer), and C110 (antenna trimmer)
	"	.6 MC	C52 (osc. padder)

BFO ADJUSTMENT

Refer to Section 4-6.

NOTCH FILTER ADJUSTMENT

Refer to Section 4-7

"S" METER CALIBRATION

- Make both the mechanical and the electrical "S" meter zero adjustments. See section 6-5.
- Connect the signal generator as for RF ALIGNMENT above. Use a 5.1 mc, 50uv, unmodulated signal.
- Set the receiver controls for AM reception on band 3 and accurately tune in the signal.
- Set SENSITIVITY to "10" (maximum), AVC to "ON" and SELECTIVITY to "5 KC".

STEP	RESPONSE CONTROL POSITION	ADJUST FOR 50 UV READING ON THE "S" METER
1	UPPER SIDEBAND	Bottom of T9
2	LOWER SIDEBAND	Top of T9

NOTE

Some interaction may occur between the two adjustments. Recheck the readings and touch up both adjustments as required to give the 50 uv reading for both Upper and Lower Sideband response.

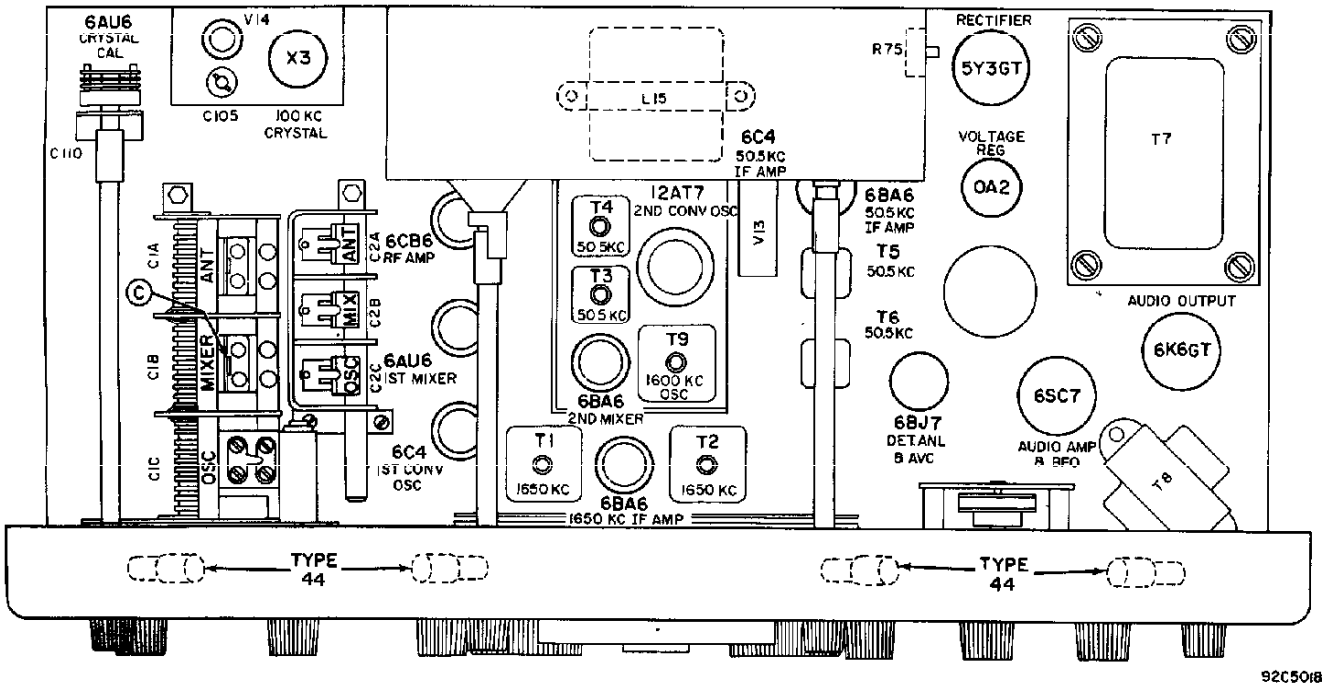

Fig. 11. Top View of Chassis Showing Location of Alignment Adjustments, Tubes, and Dial Lamps

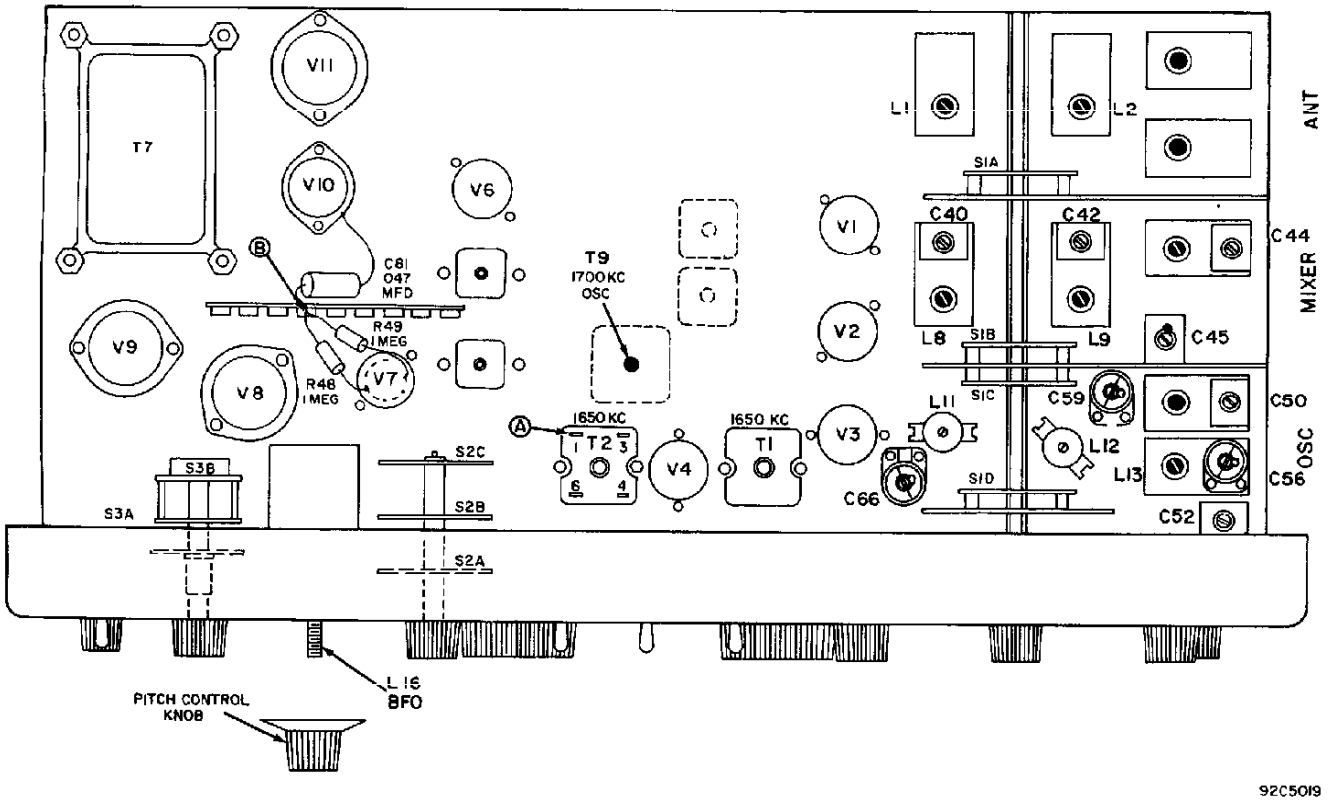

Fig. 12. Bottom View of Chassis Showing Location of Alignment Adjustments and Tubes

SECTION 6

SERVICE DATA

6-1. TECHNICAL SPECIFICATIONS

TUBES . . . . . 12 plus voltage regulator and rectifier
SPEAKER OUTPUT . . . . . 3.2 and 500 ohms
HEADPHONE OUTPUT . . 500 ohms (See Section 2-6.)
ANTENNA INPUT. . . . . 300 ohms
PHONO INPUT. . . . . High impedance
*POWER SOURCE . . . . . 105-125 volts, 50/60 cycles
POWER CONSUMPTION . . . . . 88 watts
RECEPTION . . . . . AM, CW, and SSB
INTERMEDIATE FREQUENCIES. . . . (Double Conversion): 50.5 KC and 1650 KC
DIMENSIONS (overall) . 8-7/8" x 18-1/2" x 11" deep
SHIPPING WEIGHT. . . . . 41-1/2 lb.
NET WEIGHT . . . . . 34-1/2 lb.

FREQUENCY COVERAGE

Band	Frequency Range	Calibrated Band Spread
1	.538 - 1.58 MC	-
2	1.72 - 4.9 MC	80M
3	4.6 - 13.0 MC	40M
4	12.0 - 34.0 MC	20, 15, 11-10M

* Provisions are also included for operation from an external DC power source. (See Section 2-4.)

6-2. 50.5 KC IF SYSTEM

Fig. 13 shows the type of coupling used in the 50.5 kc IF system. Note that inductive conpling is avoided by careful shielding of the IF coils and signal transfer occnrs only through capacitance and resistance. By increasing the value of "C" and "R", tbe selectivity is made more broad while by decreasing their values, the selectivity is made more sharp. The proper values of "C" and "R" are switched in the circuit by means of the SELECTIVITY control. "R" varies the "Q" of the tuned circuit and "C" varies the coupling. This R-C coupling arrangement affords a more accurate means of selectivity control than that readily obtainable by any other method.

6-3. CHASSIS REMOVAL

The chassis and front panel assembly are removable from the cabinet as a unit by removing two screws at each side of the front panel and the six screws on the underside of the cabinet.

6-4. TUBE and DIAL LAMP REPLACEMENT

To gain access to the inbes and dial lamps, raise the hinged top cover of the cabinet. The tube locations and their functions are shown in Fig. 11.

6-5. "S" METER ADJUSTMENTS

The "S" meter has two adjustments, one electrical and the other mechanical. The mechanical adjustment is accessible by rotating the "h" insignia on the front of the "S" meter to one side. (The insignia pivots at the top.) The mechanical adjustment has been accurately set at tbe factory and will normally not require any further adjustment. Adjustment can be made, if required, by inrning off the receiver and carefully rotating the adjustment screw until the meter pointer is in line with the right-hand index mark.

The electrical adjustment is made by carefully turning the "S" METER ADJ control at the rear of the receiver (Fig. 4), until the pointer is in line with the left-hand index mark. The electrical adjustment should be made with the receiver on, antenna terminals shorted, SENSITIVITY at "10", AM/CW-SSB switch at "AM", AVC switch at "ON", and RECEIVE-STANDBY switch at "RECEIVE". The settings of the remaining controls do not affect the "S" meter reading.

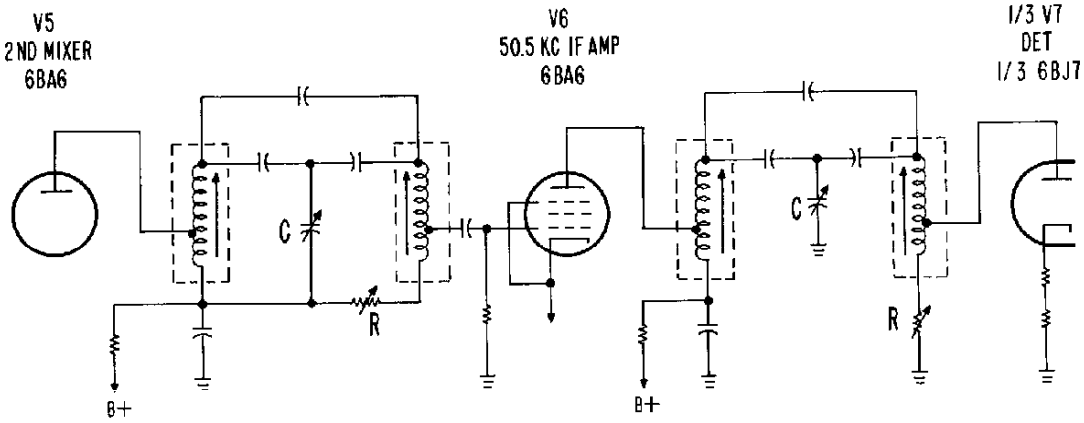

Fig. 13. Equivalent Schematic Diagram of 50.5 KC IF System

92C2378

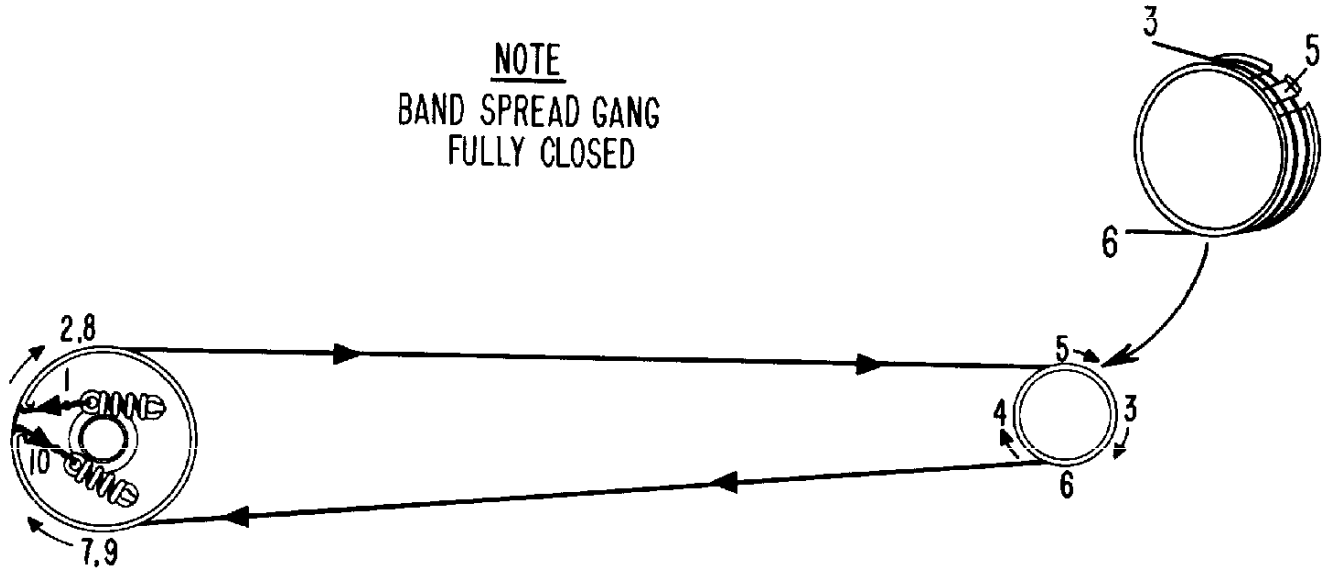

Fig. 14. Dial Cord Stringing Diagram

9282383

6-6. DIAL CABLE RESTRINGING

To restring the bandspread dial cable, first remove the front panel from the cabinet by removing the control knobs, the toggle switch and Phones jack mounting nuts, the Sensitivity control mounting nut, the two screws at each side of the front panel, and three screws on the underside of the front panel. Leave the bandspread dial in place but remove the main tuning dial to gain access to the pulley on the bandspread gang. This is accomplished as follows (Refer to Fig. 15.): (1) Remove the two screws at the front of the dial, (2) Loosen the pointed set screw to the right of the dial, (3) Disengage the idler gear from the dial by lifting upward on the idler gear mounting plate and (4) Carefully remove the dial.

Before restringing the dial cable, attach the tension springs to the cable, rotate the Bandspread control fully clockwise, and set the bandspread gang in its fully closed position. Attach the spring at one end of the cable to position "1" on the bandspread gang pulley as shown in Fig. 14 and follow the stringing sequence "1" through "10".

After stringing is completed, rotate the Bandspread control fully clockwise and check the position of the bandspread gang and the index marks at the low-frequency end of the dial. The gang should be fully closed and the index marks should be vertical.

If the bandspread gang is not fully closed with the Bandspread control set fully clockwise:

1. Loosen the two set screws that secure the pulley on the bandspread gang shaft.
2. Holding the Bandspread control fully clockwise, set the gang in its fully closed position by turning the gang shaft, and then tighten the set screws.

If the index marks at the low end of the bandspread dial are not vertical with the Bandspread control set fully clockwise: (Refer to Fig. 15)

1. Check the position of the gang as outlined above and make the adjustment if required.
2. Loosen the two set screws at the rear of the dial mounting collar.
3. Loosen the pointed set screw to the left of the bandspread dial.
4. With the right hand, hold the cam assembly in the position shown in Fig. 15, with the thumb of the left hand lift the idler gear mounting plate upward to disengage the dial, and with the index finger of the left-hand carefully rotate the dial until the index marks at the low-frequency end are vertical. After the dial is properly positioned, release the idler gear and tighten the two set screws on the collar.
5. Turn down the pointed set screw until it just touches the idler gear mounting plate. If the screw is turned down too far, the dial will not rotate freely; if not turned down far enough, the idler gear will not engage the dial properly and the dial will have a tendency to slip.
6. Rotate the Bandspread control fully clockwise and check the position of the index marks at the low-frequency end. If they are still not vertical, it will be necessary to repeat Steps 2 through 5.

To replace the main tuning dial: (Refer to Fig. 15)

1. Rotate the main tuning gang to its fully closed position.
2. Lift the idler gear mounting plate upward, replace the dial with the index marks at the low-frequency end facing upward, and fasten it in place by means of the two front screws.

3. With the index finger of the left hand, hold the main tuning gang in its fully closed position, with the right hand lift the idler gear mounting plate upward to disengage the dial, and with the thumb of the left hand carefully rotate the dial until the index marks at the low-frequency end are exactly vertical. When the dial is properly positioned, release the idler gear and tighten the two set screws at the rear of the dial mounting collar.

4. Same as Step 5 on page 19.

5. Rotate the Tuning control fully clockwise and check the position of the index marks at the low-frequency end. If they are not exactly vertical, it will be necessary to repeat Steps 3 and 4.

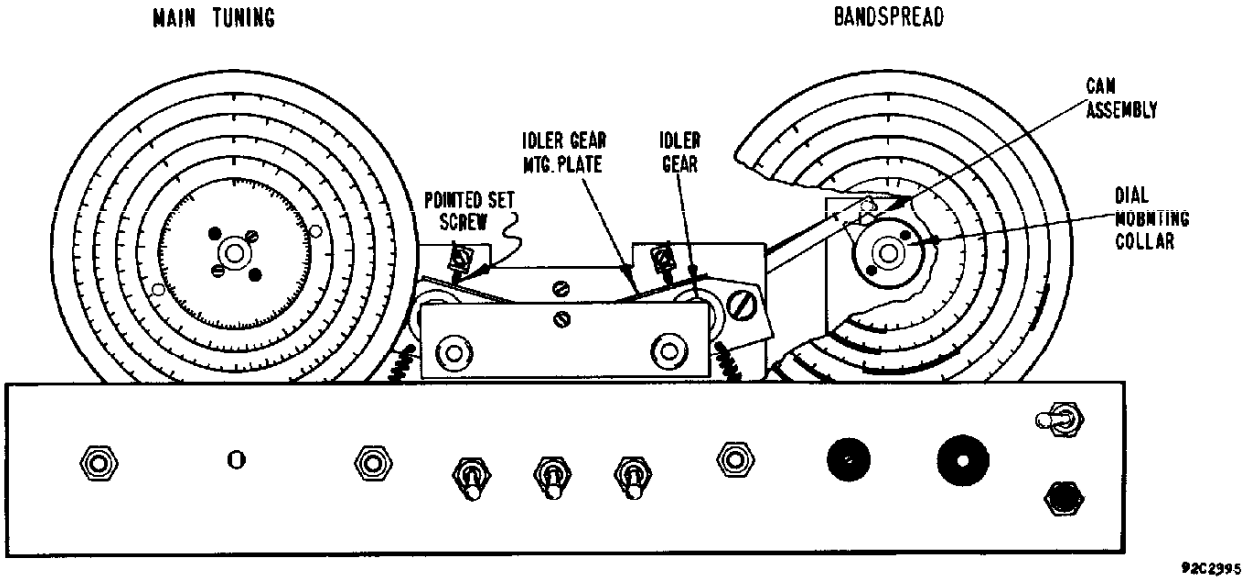

Fig. 15. Front View of Gear Drive Tuning Mechanism

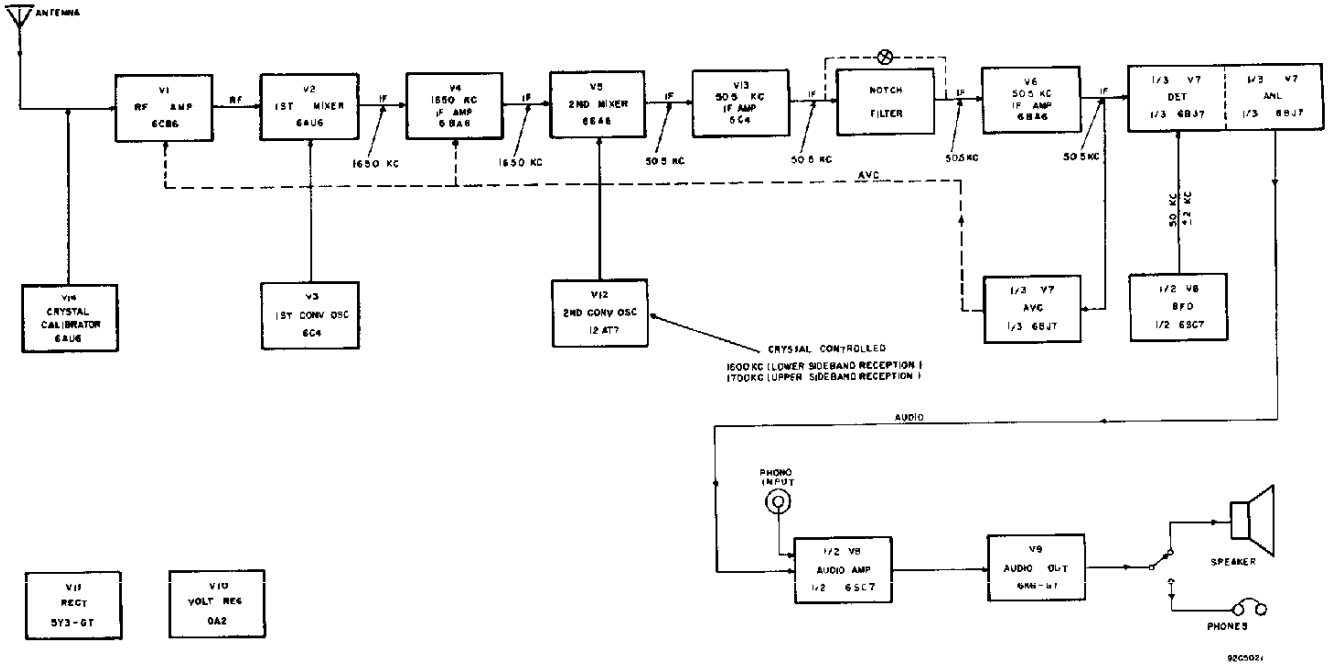

Fig. 16. Block Diagram of Receiver

SERVICE PARTS LIST

Schematic Symbol	Description	Hallicrafters Part No.
	CAPACITORS	
C-1	Variable capacitor, 3 section; main tuning (includes gears)	48-369
C-2	Variable capacitor, 3 section; bandspread tuning	48C347
C-110	Antenna trimmer 3-25 mmf.	48-368
C-40	4-80 mmfd., mica trimmer	44A395
C-42, 44, 50	3-30 mmfd., mica trimmer	44A396
C-7, 46, 78, 79, 88	220 mmfd. 10%, 500 V.; ceramic	47CA20221K
C-8, 22, 24, 25, 26	0.02 mfd. +80-20%, 500 V.; ceramic disc	47A242
C-9, 14, 15, 16, 17, 47	0.005 mfd. GMV, 500 V.; ceramic disc	47A168
C-10, 27, 48, 70	100 mmfd. 10%, 500 V.; ceramic	47X25UJ101K
C-11, 12, 13, 72	0.005 mfd. 20%, 1000 V.; ceramic disc	47B523
C-19, 20, 23, 106, 108	0.01 mfd. +80-20%, 450 V.; ceramic disc	47A224
C-26, 29, 34, 35	390 mmfd. 0%, 500 V.; mica	47X20D391J
C-30, 36, 38, 41, 43, 109	2.2 mmfd. 10%, 500 V.; composition	47B403-4
C-31, 96, 102	470 mmfd. 10%, 500 V.; mica	47X20B471K
C-32, 85	0.22 mfd. 20%, 200 V.; molded paper	46BR224L2
C-33, 37	0.047 mfd. 20%, 600 V.; molded paper	46BR473L6
C-39, 64	25 mmfd. 10%, 500 V.; ceramic	47X20UK250K
C-45	1.5-15 mmfd., mica trimmer	44B399
C-49	3.0 mmfd. ±.25 mmfd., N2200, 500 V., ceramic	47D20W030C
C-51	10 mmfd. ±.5 mmfd., N3300, 500 V., ceramic	47D20X100D
C-52	120-320 mmfd., mica padder	44A398
C-53	10 mmfd. 10%, NPO, 500 V.; ceramic	47X20CG100K
C-54	220 mmfd. 5%, N330, 500 V.; ceramic	47X35SH221J
C-55	240 mmfd. 5%, 500 V.; mica	47X20D241J
C-56	4.5-25 mmfd. NPO, ceramic trimmer	44B451
C-57	11 mmfd. ±.25 mmfd., N1500; 500 V., ceramic	47D20V110J
C-59	2.5-13 mmfd., ceramic trimmer	44B452
C-60	5.0 mmfd. ±.25 mmfd., N3300, 500 V.; ceramic	47D20X050C
C-61	320 mmfd. 5%, 500 V.; ceramic	47X35UJ321J
C-62	680 mmfd. 5%, 500 V.; mica	47X20D681J
C-63	100 mmfd. 10%, NPO, 500 V.; ceramic	47X32CG101K
C-65	7.0 mmfd. ±.25 mmfd., N1500, 500 V.; ceramic	47D20V070C
C-66	4.5-25 mmfd., ceramic trimmer	44B453
C-67	1300 mmfd. 5%, 500 V.; mica	47X30E132J
C-68	1000 mmfd. 5%, N2200; 500 V.; ceramic	47B441
C-69	1.0 mmfd. ±.1 mmfd., N2200, 500 V.; ceramic	47D25W010B
C-71	1.0 mmfd. 10%, N750, 500 V.; ceramic	47X20UJ010B
C-73, 82	4700 mmfd. 10%, 600 V.; molded paper	46BR472E6
C-74, 83	0.01 mfd. 10%, 600 V.; molded paper	46BR103E6
C-75, 84	0.022 mfd. 10%, 600 V.; molded paper	46BR223E6
	CAPACITORS (cont)	
C-76	27 mmfd. 10%, 500 V.; ceramic	47X20UJ270K
C-77, 81	0.047 mfd. 20%, 200 V.; molded paper	46BR473L2
C-86	0.01 mfd. 20%, 600 V.; molded paper	46BR103L6
C-87A-B-C	60 mfd. 450 V., 20 mfd. 450 V., 20 mfd. 400 V.; electrolytic	45B113
C-89, 90, 91, 92, 99	0.022 mfd. 20%, 600 V.; molded paper	46BR223L6
C-93	300 mmfd. 10%, 500 V.; mica	47X20C301K
C-94	560 mmfd. 5%, 500 V.; mica	47X20D561J
C-95	10 mmfd. ±.5 mmfd. N4700, 500 V.; ceramic	47D20Y100D
C-97, 98, 101	0.001 mfd. 20%, 600 V.; molded peper	46BR102L6
C-100	10 mfd. 50 V.; electrolytic	45B211
C-105	8-50 mmf. N750, trimmer	44B437
C-107	82 mmf. 500 V.; mica	47X20B820K

N - neg. temp. coef. NPO - zero temp. coef.
GMV - guar. min. value

Schematic Symbol	Description	Hallicrafters Part No.
	***RESISTORS**	
R-1	22 ohms	23X20X220K
R-2, 27, 44, 48, 71	1 megohm	23X20X105K
R-3, 7, 13	15 ohms	23X20X150K
R-4, 41, 56	180 ohms	23X20X181K
R-6, 29	560 ohms, 1 watt	23X30X393K
R-8, 45	2.2 megohms	23X20X225K
R-9, 25	2200 ohms	23X20X222K
R-10, 63	220,000 ohms	23X20X224K
R-11, 30, 31, 32	3300 ohms	23X20X332K
R-12, 19, 20, 21, 22, 23, 66	100,000 ohms	23X20X104K
R-14, 26, 38	100 ohms	23X20X101K
R-15	8200 ohms	23X20X822K
R-16, 34	3300 ohms, 1 watt	23X30X332K
R-17	500 ohms, variable ("S" Meter Adj)	25B022
R-18	270 ohms	23X20X271K
R-24, 35	22,000 ohms	23X20X223K
R-26, 50	120,000 ohms	23X30X124K
R-33	6800 ohms, 1 watt	23X30X682K
R-36	10,000 ohms, 1 watt	23X30K103K
R-37	4500 ohms, 10 watt; wirewound	24BG452E
R-39	470 ohms	23X20X471K
R-40, 67	470,000 ohms	23X20X474K
R-42, 57	220 ohms	23X20X221K
R-43, 58	390 ohms	23X20X391K
R-46	180,000 ohms	23X20X184K
R-47	5600 ohms	23X20X562K
R-49	820,000 ohms	23X20X824K
R-51, 52	6.8 ohms	23X20X068K
R-53	270,000 ohms	23X20X274K
R-55	1.5 megohms	23X20X155K
R-59	10,000 ohms, variable (Sensitivity)	25B180
R-60	330,000 ohms	23X20X334K
R-61	10,000 ohms	23X20X103K
R-62	500,000 ohms, variable (Volume)	25B534
R-64	15 megohms	23X20X156K
R-65	47,000 ohms	23X20X473K
R-66	390 ohms, 1 watt	23X30X391K
R-68	560 ohms, 1 watt	23X30X561K
R-72	12,000 ohms	23X20X123K
	***RESISTORS (cont)**	
R-73	33,000 ohms	23X30X333K
R-74	1,000 ohms	23X20X102K
R-75	15,000 ohms, variable	25B1231
R-76	5000 ohms, variable with switch, (Notch Depth)	25B1224
R-77	680,000 ohms	23X20X684K
R-78	4700 ohms	23X20X472K
R-79	100,000 ohms	23X20X104K
R-80	220,000 ohms	23X20X224K

* - All resistors are 10%, 1/2 watt, carbon type unless otherwise specified.

Schematic Symbol	Description	Hallicrafters Part No.
	O COILS AND TRANSFORMERS	
	Coil, antenna	
L-1	Band 4	51B2027
L-2	Band 3	51B2026
L-3	Band 2	51B2025
L-4	Band 1	51B2024
L-7	Choke, RF; 540 uh; 10 ohms DC	53A107
	Coil, mixer	
**L-8, C-40	Band 4	51B1327
**L-9, C-42	Band 3	51B1326
**L-10, C-44	Bands 1 and 2	51B1319
	Coil, oscillator	
L-11	Band 4	51B1321
L-12	Band 3	51B1933
**L-13, C-56, C-57	Band 2	51B1921
**L-14, C-50	Band 1	51B1328
L-15	Choke, filter; 8 H; 85 ma; 310 ohms DC	56A218
L-16	Coil, BFO	54B053
L-17, 18	Choke, RF; red	53B008
L-19	Coil, T-bridge	51B2028
T-1, 2	Transformer, 1st and 2nd IF (1650 KC)	50B488
T-3, 4, 5, 6	Transformer, IF (50.5 KC)	50B489
T-7	Transformer, power	52C221
T-8	Transformer, audio output	55-264
T-9	Transformer, 2nd conversion oscillator	50C689

** - Trimmers and capacitors indicated above are supplied with the coils but may also be ordered seperately if desired. See "Capacitors" section.

O - Coils are supplied less tuning slug. See "Miscellaneous" section for part numbers of slugs.

Schematic Symbol	Description	Hallicrafters Part No.
	SWITCHES	
	Switch wafers, Band Selector	
S-1A	Antenna section	62B053
S-1B	Mixer section	62B053
S-1C	Oscillator grid section	62B054
S-1D	Oscillator plate section	62B055
	Detent and shaft for Band Selector switch	74B172
S-2	Switch, selectivity	60B673
S-3	Switch, Response	60B672
S-4, 5, 6	Switch, spst toggle; AVC, AM/CW-SSB, and Noise Limiter	60A138
S-7	Switch, dpst toggle; Receive-Standby	60A192
S-8	Part of R76	------
S-9	Switch, rotary (Calib. On-Off)	60A742
	JACKS, PLUGS AND SOCKETS	
PL-1	Line cord and plug	87A1669
PL-2	Plug, octal; Jumper Plug	35A003
SO-1	Jack, Phono	36A041
SO-2	Socket, octal; DC Power Socket.	6B296
SO-3	Jack, Phones	36B048
	Socket assembly, dial lamp (center)	86A192

SERVICE PARTS LIST (Cont.)

Schematic Symbol	Description	Hallicrafters Part No.
	SWITCHES (cont)	
	Socket assembly, dial lamp (end)	86A191
	Socket, tube; min. 7-pin	6A347
	Socket, tube; min. 9-pin	6B500
	Socket, tube; octal	6B296
	TUBES AND LAMPS	
V-1	6CB6: RF amplifier	90X6CB6
V-2, V-14	6AU6: 1st mixer, crystal cal	90X6AU6
V-3, V-13	6C4: 1st conversion osc, 50.5 KC IF amplifier	90X6C4
V-4, 5, 6	6BA6: 1650 KC IF amplifier, 2nd mixer, and 50.5 KC IF amplifier	90X6BA6
V-7	6BJ7: detector, AVC, and noise limiter	90X6BJ7
V-8	6SC7: audio amplifier and BFO	90X6SC7
V-9	6K6GT: audio output	90X6K6GT
V-10	OA2: voltage regulator	90XOA2
V-11	5Y3GT: rectifier	90X5Y3GT
V-12	12AT7: 2nd conversion oscillator	50X12AT7
LM-1, 2, 3, 4	Lamp, pilot; type 44	39A003
	MISCELLANEOUS	
	Ball bearing, 1/8" dia	77A505
	Ball bearing, .093" dia	77A1099
	Bracket, T-bridge coil stop (notch filter)	67A3523
	MISCELLANEOUS (cont)	
	Cabinet bottom section	66D1087
	Cabinet front panel (less front control nameplate)	68D428
	Cabinet top cover	66D1086
	Cam assembly, bandspread	77B916
	Cam assembly, main tuning	77B914
	Clip, tuning slug retaining; for L-11 and L-12	2A1050
	Coupler, flexible for notch filter depth control shaft	29A051
	Coupler, T-bridge coil shaft (notch filter frequency control)	29A301
	Dial cable assembly	38A029
	Dial scale, bandspread	83-502
	Dial scale, main tuning	83-503
	Gear, idler; helical type; 56 teeth	26B258
	Insulator, bakelite; .156" id, .5" od, 1/4" th	8A723
	Knob, Band Selector	15B822
	Knob, Main Tuning and Bandspread	15B910
	Knob, Pitch Control	15A890
	Knob, Plain, Notch Freq, Notch Depth, Antenna Trimmer, and Calib. On-Off	15-936
	Knob, Response	15B823
	Knob, Selectivity	15B821
	Knob, Skirt, Notch Depth	03A549
	Knob, Skirt, Notch Freq	63A548
	Knob, Volume and Sensitivity	15B820
	Lock, line cord	
	Male section	76A397-1
	Female section	76A397-2
X-1 and X-2		
	Matched crystal pair, consists of one 1600 KC crystal and one 1700 KC crystal	19C1902
K-3	Crystal, marker, 100 KC	19A1915
	Mounting foot, cabinet; rubber	16A007
	Nameplate, front control	68D429
	Notch, filter assembly complete (less, shafts, couplers and knobs	41X50054
	Pulley and bushing assembly, bandspread control shaft	28B201
	Pulley and bushing assembly, bandspread gang shaft	28B203
	Shaft, plastic for notch filter frequency control and notch depth control	74A1052
	Shield, tube; min. 7-pin	69A306
	Shield, tube; min. 9-pin	69A519
M-1	"S" meter assembly, complete	82-280
	Front cover, "S" meter; clear plastic (part of "S" meter)	8C2612
	"h" insignia (part of "S" meter)	7A592
	Spring, dial cord tension	75A139-0
	Spring, compression; 2-3/4" long, 2 turns	75B332
	Spring, takeup; 5/8" long, 12-1/4 turns	75A326
TS-1	Terminal strip, antenna	88A032
TS-3	Terminal strip, speaker	88A578
	Tuning slug for L-1, 2, 8, 9, and 13	77A068
	Tuning slug for L-11 and 12	3A1543
	Window, bandspread dial	22C500
	Window, main tuning dial	22B499

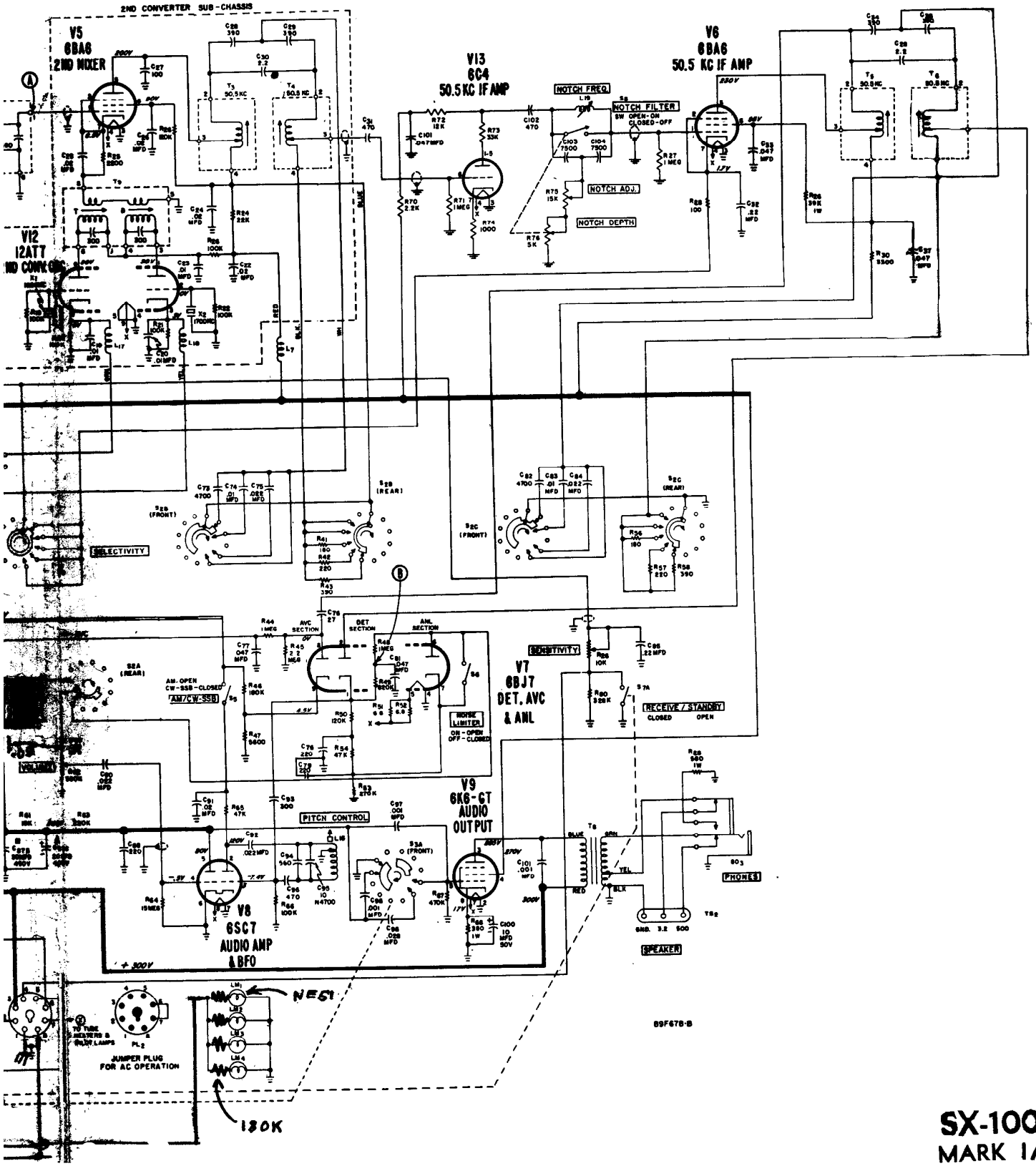

SX-100
MARK IA

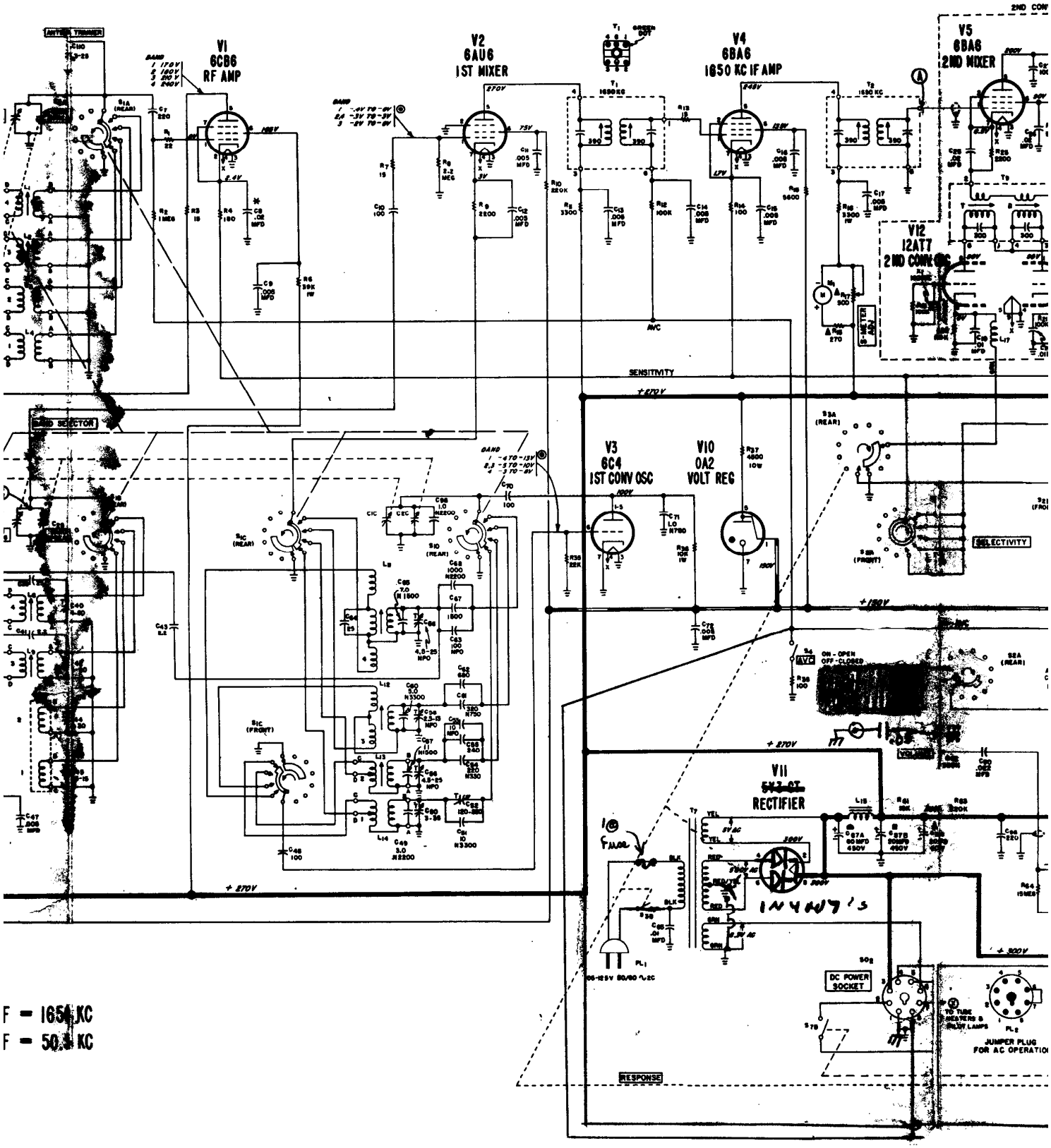
V1
6CB6
RF AMP
V2
6AU6
1ST MIXER
V4
6BA6
1650 KC IF AMP
V5
6BA6
2ND MIXER
V12
12AT7
2ND CONV OSC
V3
6C4
1ST CONV OSC
V10
0A2
VOLT REG
V11
RECTIFIER
ANTENNA TRIMMER
BAND SELECTOR
SENSITIVITY
SELECTIVITY
RESPONSE
AVC
DC POWER SOCKET
JUMPER PLUG FOR AC OPERATION
1N4007's
F = 165 KC
F = 50 KC

NOTES

1. Resistor values in ohms and capacitor values in MMF unless otherwise specified. K=1000.
2. Resistors are ½ watt and 10% unless otherwise specified.
3. Band Selector switch S1 shown in ".538-1.58 MC" position (fully counterclockwise). Switch sections are shown as viewed from rear of set.
4. Selectivity switch S2 shown in "5 KC" position (fully counterclockwise). Switch sections are shown as viewed from front of set.
5. Response switch S3 shown in "Lower Sideband" position. Section S3B is open in the "Power Off" position and closed in all other positions.
6. See Fig. 11 for location of all switch sections.
7. Values and tolerances are nominal and variations may be found. It is recommended that the value of any replacement correspond to the nominal value of the part being replaced.

Chassis

VOLTAGES

Voltage readings taken under the following conditions:

1. Line voltage—117 volts, 60 cycles AC.
2. Antenna terminals shorted, Sensitivity at "10", Receive-Standby at "Receive", AM/CW-SSB switch at "AM", AVC at "On", Noise Limiter at "Off", Response at "Lower Sideband", and Selectivity at "5 KC".
3. All voltages measured between tube socket terminals and chassis unless otherwise specified. See Fig. 11 for location of tubes.
4. Voltages are DC and positive unless otherwise specified. DC voltages measured with VTVM; AC voltages with 1000 ohms-per-volt meter.
5. Voltages shown for V12 are with Response control at "Lower Sideband". In the "Upper Sideband", "Treble Cut", and "Normal" positions, the voltages of the two triode sections are reversed. The grid voltage will vary with crystal activity.
6. Voltages for pins 2 and 3 of V8 are taken with AM/CW-SSB switch at "CW-SSB".
7. Voltage varies with setting of tuning gang.

A "S" METER ZERO ADJUSTMENT

Alternate values of resistance were used in some receivers for R-17 ("S" meter zero adjustment) and R-18 (The associated current limiting resistor). The alternate values were as follows:

SYMBOL	VALUE	HALLICRAFTERS PART NUMBER
R-17	200 ohms	25B714
R-18	56 ohms	23X20X560K

Either the alternate values or the original values as shown in your service parts list may be used for replacement. It is important however that if one of the alternate values is used the other must also be used.

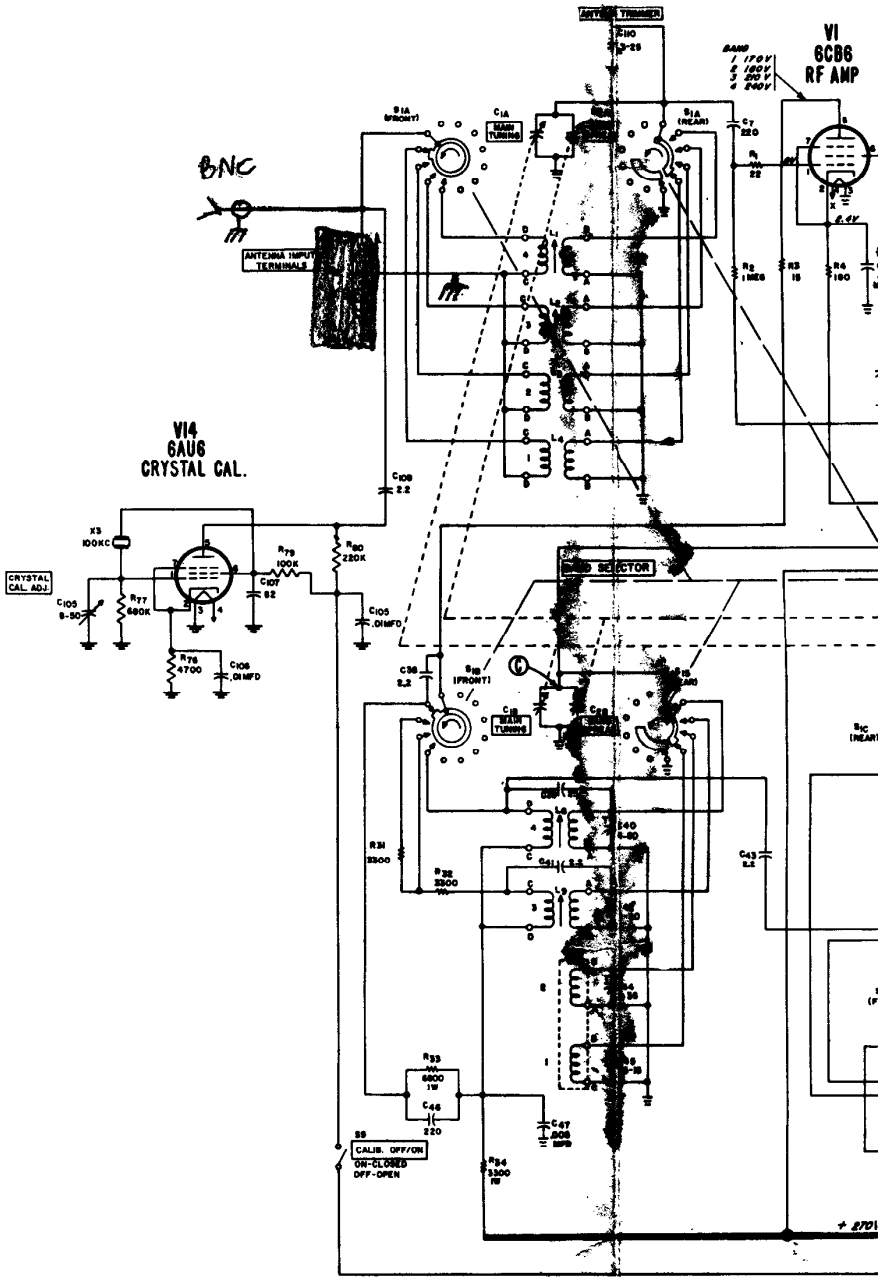

1 ST IF = 1656 KC
2 ND IF = 50.5 KC