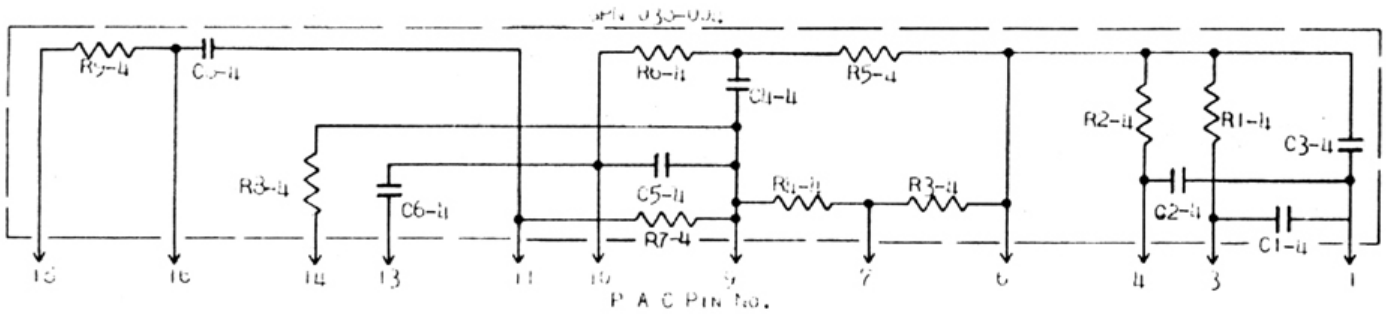


| | | | | | | |
|---|---|---|---|---|---|---|
| R1-4 | 1.5 MEG Ω | ½W | | C1-4 | .01 µF | |
| R2-4 | 47 K Ω | ½W | | C2-4 | 100 µµF | |
| R3-4 | 220 K Ω | ½W | | C3-4 | 100 µµF | |
| R4-4 | 220 K Ω | ½W | | C4-4 | .01 µF | |
| R5-4 | 1.0 MEG Ω | ½W | | C5-4 | 100 µµF | |
| R6-4 | 1.0 MEG Ω | ½W | | C6-4 | .01 µF | |
| R7-4 | 470 K Ω | ½W | | C7-4 | .01 µF | |
| R8-4 | 3.9 K Ω | ½W | | | | |
| R9-4 | 270 K Ω | ½W | | | | |

GPN 038-006

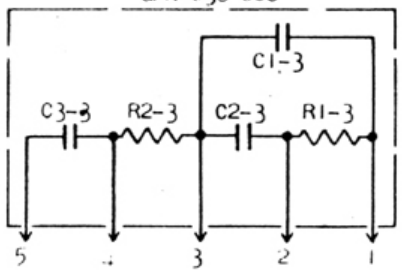


| | | | | | |
|---|---|---|---|---|---|
| R1-3 | 4.7 KΩ | ½W | | C1-3 | .01 µF |
| R2-3 | 100 Ω | ½W | | C2-3 | .01 µF |
| | | | | C3-3 | .01 µF |

SK 1209-90
GPN 038-007

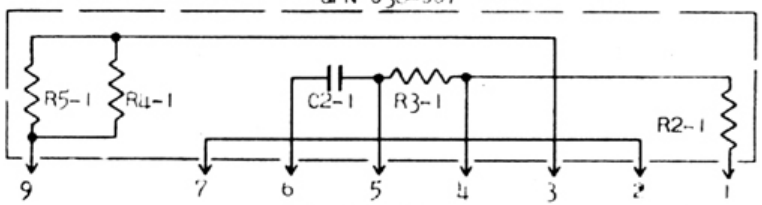


| | | | | |
|---|---|---|---|---|
| R2-1 | 100 KΩ | ½W | | C2-1 .01 µF |
| R3-1 | 100 KΩ | ½W | | |
| R4-1 | 47 KΩ | ½W | | |
| R5-1 | 47 KΩ | ½W | | |

510-098
A

SK 1216-07
GPN 038-005

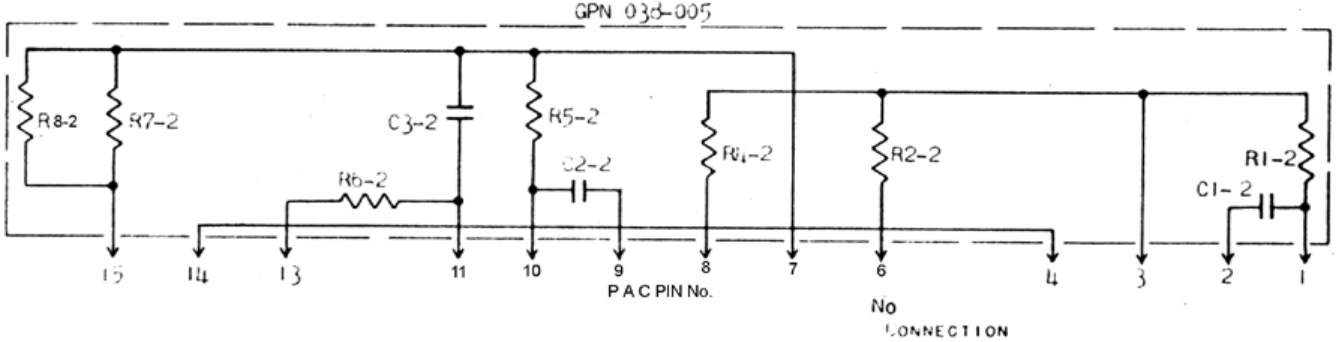


| | | | | |
|---|---|---|---|---|
| R1-2 | 2.7 KΩ | ½W | | C1-2 .01 µF |
| R2-2 | 2.7 KΩ | ½W | | C2-2 100 µµF |
| R4-2 | 1.0 KΩ | ½W | | C3-2 .01 µF |
| R5-2 | 150 KΩ | ½W | | |
| R6-2 | 3.9 KΩ | ½W | | |
| R7-2 | 20 KΩ | ½W | | |
| R8-2 | 20 KΩ | ½W | | |

**GONSET, INC.**
ANAHEIM, CALIFORNIA

| | | |
|---|---|---|
| DWN 11-3-61 | -SCHEMATIC- | A |
| CHK 11-2-61 MARTINI | RECEIVER | SHEET 2 OF 2 |
| CHK 11-3-61 AGL | | 510-098 |
| APP 11-3-61 | | |